OPERATION AND MAINTENANCE MANUAL

NAV-750

1-16-0373

ifr INC

NAV-750/A/B

VOR/LOC/COMM AND G/S BENCH TEST SET

MANUAL PART NO. 1-16-0373

DATE PRINTED: APRIL 1978

4053 Navajo Lane/Wichita, Kansas 67210 U.S.A./316/685-9271/TWX.910-741-6952

PUBLISHED BY
IFR INC.
Wichita, Kansas
67210

Copyright 1978 by IFR, Inc.

All rights reserved. Printed in the United States of America. No part of this publication may be reproduced, stored in a retrieval system, or transmitted in any form or by any means, electronic, mechanical, photocopying, recording or otherwise without the prior written permission of the publisher.

Digitized by the Internet Archive
in 2025

https://archive.org/details/manualsplus_10798

TABLE OF CONTENTS

OPERATION

		Page
	Limtied Warranty and Service Instructions . . .	1-W
	Warranty.	1-W
	Changes in Specifications	1-W
	Service and Shipping Instruction.	1-W.1
SECTION I	GENERAL DESCRIPTION AND SPECIFICATIONS	
1.1	General Description	1-1
1.2	Model NAV-750	1-1
1.3	Model NAV-750A.	1-1
1.4	Model NAV-750B.	1-1
1.5	Specifications.	1-1
	NAV-750 Specifications . . . . . .1-3 through	1-7
	Technical Summary. . . . . .1-8 through	1-11
	NAV-750A Specifications . . . . . 1-13 through	1-17
	Technical Summary. . . . . 1-18 through	1-21
	NAV-750B Specifications . . . . . 1-23 through	1-27
	Technical Summary. . . . . 1-28 through	1-31
SECTION II	INSPECTION	
2.1	Incoming Inspection	2-1
2.2	Grounding Requirements.	2-1
2.3	Bench/Rack Installation	2-1
2.4	Cleaning.	2-1
2.5	Inspection Recommendations.	2-2
2.6	Repacking for Shipment.	2-3

TABLE OF CONTENTS

SECTION III — NAVIGATION RADIO AIDS SIGNALS AND NAV-750 SERIES TEST SET OPERATING PROCEDURES

		Page
3.1	Introduction.	3-1
3.2	VOR Station	3-1
3.3	Instrument Landing System	3-2
3.4	Marker Beacons as Used with ILS	3-4
3.5	NAV-750 Series Bench Test Set Simulation of VHF Communication Channels . . .	3-5
3.6	NAV-750 Series Controls, Indicators, and Connectors	3-5
3.7	NAV-750 Series Bench Test Set Operating Procedures	3-27
3.8	VOR Receiver Tests.	3-30
3.9	Automatic Frequency Channeling Test	3-41
3.10	ILS Localizer Receiver Tests.	3-42
3.11	ILS Glide Slope System Tests.	3-53
3.12	VHF Receiver Testing. (118 to 135 MHz Band)	3-64
3.13	Marker Beacon Receiver Tests with NAV-750B. . . .	3-65

SECTION IV — THEORY OF OPERATION (GENERAL)

4.1	Introduction.	4-1
4.2	General Description	4-1
4.3	VOR Section Description	4-2

LIST OF FIGURES AND TABLES

		Page
Figure 3-1	NAV-750 Series Front and Back Panels.	3-6
Table 3-1	Correspondence Chart for dB,. . . . . Volts, and Watts into a 50 ohm load.	3-7
Table 3-2	Correspondence Chart for 90 and . . . . . 150 Hz tones.	3-11
Figure 3-2	Controls, Indicators and Connectors . . . . . (Front Panel)	3-12
Figure 3-3	Back Panel Connectors	3-20
Figure 3-4	Connections for VOR, LOC, G/S, or Comm. . . . Receiver Testing.	3-23
Figure 3-5	Accessory Connector, J-10, Pin-outs and . . . Tone Jack Identification.	3-24
Figure 3-6	External Connections (J-8) to Remote. . . . . Channeling Board (Dwg. 3-16-0068)	3-25
Figure 4-1	Modulation and VOR System (Dwg. 3-16-0235). . Effectivity: NAV-750 & NAV-750A	4-7
Figure 4-2	RF and Frequency Select (Dwg. 3-16-0227). . . Effectivity: NAV-570 & NAV-750A	4-8
Figure 4-3	RF Diagram (Dwg. 3-16-0226) . . . . . Effectivity: NAV-750 prior to S/N 408 NAV-750A prior to S/N 381	4-9
Figure 4-4	RF Diagram (Dwg. 3-16-0341) . . . . . Effectivity: NAV-750 S/N 408 & on NAV-750A S/N 381 & on	4-10
Figure 4-5	Modulation and VOR System (Dwg. 3-16-0338). . Effectivity: NAV-750B S/N 2001 & on	4-11
Figure 4-6	RF and Frequency Select (Dwg. 3-16-0339) . . Effectivity: NAV-750B S/N 2001 & on	4-12
Figure 4-7	RF Diagram (Dwg. 3-16-0340) . . . . . Effectivity: NAV-750B S/N 2001 & on	4-13

NOTE

The Table of Contents for Performance Evaluation Procedures (Section 5) and the Calibration Procedures (Section 6) is located at the beginning of the MAINTENANCE portion of this manual

The Table of Contents for Parts Layouts, Theories of Operation, Schematics (Section 8), Parts List (Section 9), and Mechanical Assemblies (Section 10) is located at the beginning of the SCHEMATICS portion of this manual

LIMITED WARRANTY AND SERVICE INSTRUCTIONS

A. Warranty.

B. IFR, Inc., warrants that each new instrument manufactured by it is free from defects in material or workmanship under normal use and service for a period of two years from the shipping date. Each instrument is functionally tested immediately prior to shipment. If, upon examination by IFR, the instrument is determined to be defective in workmanship or material , IFR will, subject to the conditions set forth below, either repair the defective part or replace it with a new part on a pro rata basis. IFR shall not be liable for any delay or failure to furnish a replacement part resulting directly or indirectly from any governmental restriction, priority or allocation or any other governmental regulatory order or action, nor shall IFR be liable for damages by reason of the failure of the instrument to perform properly or for any consequential damages. The warranty does not apply to any instrument that has been subject to negligence, accident, shipping damage, misuse or improper installation or operation, or that in any way has been tampered with, altered or repaired by any person other than any authorized IFR service organization or any employee thereof, or to any instrument whose serial number has been altered, defaced or removed, or to any instrument purchased within, and thereafter removed beyond, the continental limits of the United States. Annual recalibration is not included in warranty.

C. All sales are FOB IFR Factory, Wichita. IFR will assume responsibility for freight charges on all legitimate warranty claims within thirty(30) days from the original shipping date. All legitimate warranty claims within thirty (30) to ninety (90) days should be shipped to IFR freight collect and will be returned freight collect. All freight on warranty claims after ninety (90) days will be paid by the customer.

D. This warranty shall, at IFR's option, become void if the equipment ownership is changed, unless the prior owner or the proposed owner obtains approval of continuation of the warranty prior to the change of ownership.

E. This warranty is in lieu of all other warranties, expressed or implied, and no one is authorized to assume any liability on behalf of IFR or impose any obligation upon it in connection with the sale of any instrument, other than as stated above.

F. Changes in Specifications.

G. The right is reserved to change the published specifications of the equipment at any time and to furnish merchandise in

accordance with current specifications without incurring any liability to modify equipment previously sold, or to supply new equipment in accordance with earlier specifications except the classification of special apparatus.

H. Service.

I. When requesting service, the originator shall give IFR information concerning the nature of the failure and the manner in which the equipment was used when the failure occurred. Type, model, and serial number should also be provided.

J. Do not return any products to the factory without first receiving authorization from the factory Customer Service Department.

CONTACT:

IFR, Inc.
4053 Navajo Lane
Wichita, Kansas 67210 USA

ATTN: Customer Service Department

PHONE: (800) 835-2350 (Customer Service Only)

TWX: 910-741-6952

K. Unless otherwise specifically requested, packaging for a return shipment shall be in the original container and packaging material. If the original container and material are not available, information as to suitable packaging techniques will be provided by the IFR Shipping Department.

L. Returned material claimed defective, but found to meet all previously applicable specifications, will be subject to a minimum evaluation charge consisting of the labor charges involved in the status determination of the material.

M. Returned material not accompanied by statement of claimed defects may be returned at the originator's expense.

N. Any departure from the above instructions without specific factory authorization can be considered a breach of warranty, and all expenses incurred as a result will be billed to the originator.

SECTION I

1.1 GENERAL DESCRIPTION. The NAV-750 series bench tests sets are precision simulators of VOR, ILS, (LOC and G/S), and COMM ground stations. In the NAV-750B model, simulation of the Marker Beacon ground station with selectable tones for Outer, Middle and Inner Marker Beacons is included. All model NAV-750 bench test sets are completely self-contained and require no additional equipment for NAV-COMM, ILS and Marker Beacons testing.

1.2 MODEL NAV-750. The model NAV-750 is considered the standard model and is a completely self-contained unit. The unit can remotely channel a receiver using ARINC two out of five select system or parallel BCD code.

1.2.1 The VOR section of the NAV-750 provides pushbutton bearing selection for each 30° of azimuth as well as two pushbuttons which increase or decrease the generated bearing in 10° increments. In addition, the bearing may be varied in .01° or .05° increments with the bearing control. All VOR RF output levels may be varied with a calibrated output attenuator.

1.2.2 The LOC and G/S sections for the NAV-750 use precision 90 and 150 Hz tone generators to provide accurately mixed tones for "on-course" and specific "off-course" signals. All LOC and G/S RF output levels may be varied with a calibrated output attenuator.

1.2.3 COMM receiver frequencies from 118.000 to 156.000 MHz are generated by an RF generator in 25 kHz steps. A 1020 Hz tone may be added. Again, the RF output level of the test set may be varied with a calibrated output attenuator.

1.2.4 In all modes of operation, the RF generator is crystal controlled and phase-locked in 25 kHz steps. Automatic frequency stepping at a variable rate is provided, selectable in 25, 50, 100, or 200 kHz increments. In addition, a Variable Frequency control provides ±30 kHz on Mkr Bcn, ±50 kHz on VOR, LOC and Comm, and ±150 kHz on G/S frequencies.

1.3 MODEL NAV-750A. All features of the NAV-750 are all included in the NAV-750A. In addition, the ILS DDM value accuracies have been improved as well as the spectral purity of the output signal.

1.4 MODEL NAV-750B. Included with all the features of the NAV-750A, is the capability of the NAV-750B to test Marker Beacon receivers. Inner, Middle and Outer Marker Beacon audio tones are selectable. Marker Beacon RF output ranges from 70 to 79.9 MHz and the RF output level is variable with a calibrated output attenuator.

1.5 SPECIFICATIONS. Specifications for each model of the NAV-750 are listed separately in this section.

SPECIFICATIONS

NAV-750

RF POWER OUT

Accuracy:	±1.5 dB to -50 dBm ±2.5 dB from -50 dBm to -120 dBm
Leakage: . . . . . (With all unused outputs properly terminated)	Less than 3μV induced in a two-turn, one inch diameter (#20 gauge wire) loop, measured one inch away from any surface and into a 50 ohm receiver.

INTERNAL TEMPERATURE CONTROLLED CRYSTAL OSCILLATOR (TCXO)

Accuracy:	Better than ±1 ppm for 15° to 35° C
(After calibration at 25° C).	Better than ±3 ppm for 10° to 45° C
Aging:.	Less than ±2 ppm/year

CLOCK OSCILLATOR (2.16 MHz)

Accuracy:	±0.02%

SPECTRAL PURITY

NOTE

All levels observed with the NAV-750 output attenuator set to -10 dBm. However, other levels may be used for convenience to meet test equipment requirements.

Harmonics:.	30 dB below carrier, maximum (108.000 through 335.000 MHz)

(cont'd next page)

SPECTRAL PURITY (cont'd)

Close-In Noise (single-sideband Noise):

At 108.000 MHz	74 dB below carrier at ±20 kHz in 300 Hz resolution bandwidth, or 79 dB below carrier at ±20 kHz in 100 Hz resolution bandwidth.
At 334.700 MHz	68 dB below carrier at ±20 kHz in 300 Hz resolution bandwidth, or 73 dB below carrier at ±20 kHz in 100 Hz resolution bandwidth.

Harmonic Spurious Noise:

NOTE

The NAV-750 phase-lock control frequency is 12.5 kHz.

At 108.000 MHz	68 dB below carrier at ±12.5 kHz and 71 dB below carrier at ±25.0 kHz in 300 Hz resolution bandwidth.
At 334.700 MHz	63 dB below carrier at ±12.5 kHz, and 74 dB below carrier at ±25.0 kHz in 300 Hz resolution bandwidth.

Broadband Noise:

At 108.000 MHz	80 dB below carrier at ±100 kHz in 1 kHz resolution bandwidth.
At 334.700 MHz	80 dB below carrier at ±100 kHz in 1 kHz resolution bandwidth.

Residual FM: (Post-detection noise bandwidth, 20 Hz to 15 kHz)

At 108.000 MHz	±200 Hz p-p, or less.
At 334.700 MHz	±400 Hz p-p, or less.

MODULATION

AM Depth: . . . . . .0% to 98%

Accuracy: . . . . . As listed below, with front panel Modulation Controls in CAL positions.

NOTE

* Indicates 0-100 meter scale is selected. All others on 0-30% Modulation Scale. All values are for single-tone modulation of indicated frequency.

Modulation Frequency	RF Range	Acceptable Level of Modulation (absolute) at RF output Connector	Meter Indication Tolerance Referenced to Absolute Value at RF output Connector
30 Hz	VOR	30%(28.8 to 31.2)	±1.2% Modulation
9960 Hz	VOR	30%(28.8 to 31.2)	±1.2% Modulation
90 Hz	LOC	20%(19.2 to 20.8)	±0.8% Modulation
150 Hz	LOC	20%(19.2 to 20.8)	±0.8% Modulation
90 Hz	G/S	*40%(38.4 to 41.6)	±1.6% Modulation
150 Hz	G/S	*40%(38.4 to 41.6)	±1.6% Modulation
1020 Hz	Comm	30%(28.8 to 31.2)	±1.2% Modulation

(cont'd next page)

SPECIFICATIONS

NAV-750

TONES

Distortion: (Measured at Sum of Tones Jack or individual Tone Jacks).

9960Hz	1.5% Max.
30Hz Var.	0.5% Max.
30Hz Ref.	0.5% Max.
1020Hz	0.5% Max.
90Hz	0.4% Max.
150Hz	0.4% Max.

Frequencies:

90 Hz 150 Hz 30 Hz Ref. 30 Hz Var.	These tones are derived from the 2.16 MHz crystal oscillator and therefore reflect the accuracy of the oscillator. (±0.02%)
9960 Hz	Phase-locked to 30 Hz Ref. tone which is derived from the 2.16 MHz crystal oscillator.
1020 Hz	±0.5%

NOTE

Tone distortion should increase no more than 0.2% at the DEMOD Jack.

DDM ACCURACY (Theoretical - not measured)

COMPOSITE AUDIO ERROR = Centering Error +1.5% DDM setting

$$\text{PERCENTAGE OF MODULATION ERROR} = \text{DDM setting} \times \frac{\left[\text{measured, single-tone, \% of modulation at centering}\right] - \left[\text{desired \% of modulation at centering}\right]}{\left[\text{Desired \% of modulation at centering}\right]} \quad *$$

TOTAL ERROR = Composite Audio Error + Percentage of Modulation Error

* desired % of modulation at centering for LOCALIZER 20%
* desired % of modulation at centering for GLIDE SLOPE 40%

DDM setting	Composite Audio Error (DDM)	max % of Mod Error (DDM)	TOTAL (maximum error) (DDM)
LOCALIZER:			
.046	.00169	.00230	.00399
.093	.00240	.00465	.00705
.155	.00333	.00775	.01108
.200	.00400	.01000	.01400
GLIDE SLOPE			
.045	.00168	.00225	.00393
.091	.00237	.00455	.00692
.175	.00363	.00875	.01238
.400	.00700	.02000	.02700

SPECIFICATIONS

NAV-750

Technical Summary

VOR SECTION:

Bearing Selection:	Twelve preset bearings each 30°. Additional +10° and -10° steps from any bearing selected. Bearing control provides continuous bearing adjustment in 0.01° or 0.05° steps.
Bearing Accuracy:	±0.05° on all bearings.
Bearing Monitor:	By independent counter displays bearing to 0.01° resolution.
VOR Tones:	30 Hz REF and 30 Hz VAR tones derived from 2.16 MHz crystal oscillator. 9960 MHz frequency locked to the 2.16 MHz crystal oscillator.
Ident Tone:	1020 Hz tone may be added from 0 to 60% mod.

LOC SECTION:

Deviation:	±0.046 DDM, ±0.93 DDM, ±0.155 DDM, and continuously adjustable ±0.4 DDM. One tone may be deleted while the other is at 20%.
Centering Accuracy:	±0.001 DDM (±.85μA)
Tones:	90 Hz and 150 Hz tones phase-locked to ±.1° or phase variable at five times the angle selected by the VOR bearing selector. 1020 Hz tone may be added.

GS SECTION:

Deviation:	±0.045 DDM, ±0.091 DDM, ±0.175 DDM, and continuously adjustable ±0.8 DDM. One tone may be deleted while the other is at 40%.

(cont'd next page)

GS SECTION: (cont'd)

Centering Accuracy:	±0.001 DDM (±1μA)
Tones:	Same as LOC

COMM SECTION:

Modulation:	1020 Hz tone 0-60% for audio tests. External modulation may also be added.

RF GENERATOR:

Frequency Range:	108 to 156 MHz in 25 kHz increments and 329 to 335 MHz.
Frequency Selection:	Manually by thumbwheel switch. Automatically at a variable rate in 25, 50, 100, or 200 kHz increments, up in frequency only. Auto channeling stops at 117.950 and 135.975 MHz. External channeling is available via Ext. channeling input at rear panel.
Variable Frequency:	±50 kHz from 108 to 156 MHz ±150 kHz from 329 to 335 MHz. Generator remains phase-locked at all fixed and variable frequencies.
Frequency Accuracy:	Controlled by oven crystal to ±0.0001%.
Frequency Monitor:	By independent counter to 1 kHz or 0.1 kHz resolution. Counter time base ±0.0001%.
Remote Function:	Frequency in use fed to rear panel as 2 out of 5 channeling and parallel BCD. Remote channeling follows manual or auto selection.

(cont'd next page)

RF GENERATOR: (cont'd)

Modulation Selection:	Automatic by frequency selected. VOR mod applied if on any VOR freq, LOC mod applied if on any LOC freq, GS mod applied if on any LOC freq and LOC/GS switch in GS position.
EXTERNAL MODULATION:	May be added to any signal through rear panel jack. (J18) On sets S/N 408 & on, J-18 must be terminated with 100 ohms or less when External Modulation is not used.
Impedance (J18):	1K ohm nominal
Sensitivity:	For NAV-750 units prior to S/N 408: 9.1V p-p (±0.6V) = 30% (MASTER MOD in Cal position). For NAV-750 units S/N 408 and on: 9.1V p-p (±0.6V) = 90% (MASTER MOD in Cal position).
DEMOD OUTPUT:	For any signal at a rear panel jack. (J23)
Impedance (J23)	1K ohm nominal
DC Voltage:	3.75V (±0.3V)
AC Voltage:	2.72V (±0.2V) = 100% Modulation (±0.2V due to difference in sets)

(cont'd next page)

SPECIFICATIONS

NAV-750

Technical Summary

REAR PANEL CONNECTORS:	External Modulation Input VOR Composite Tones output VOR 30 Hz VAR Tone output VOR 9960 Hz FM Tone output 1020 Hz Tone output VOR 30 Hz REF Tone output 150 Hz Tone output 90 Hz Tone output RF Demod output AC Power Input (See power requirements below) External Clock Input Remote Channeling Input Remote Channeling output
POWER REQUIREMENTS:	105 to 120 VAC or 220 to 250 VAC, 50 to 400 Hz (Cooling fan 50/60 Hz only. Optional dc cooling fan available for 400 Hz operation)
POWER CONSUMPTION:	250 W Maximum, 110 W Nominal
SIZE:	7.5" high by 16.75" wide by 18.375 deep.
WEIGHT:	Approximately 45 pounds

SPECIFICATIONS

NAV-750A

RF POWER OUT

Accuracy:	±1.5 dB from -6 dBm to -50 dBm ±2.5 dB from -50 dBm to -120 dBm
Leakage: (With all unused outputs properly terminated)	Less than 3µV at 334.700 MHz and 1µV at 108.000 MHz induced in a two-turn one inch diameter (#20 gauge wire) loop, measured one inch away from any surface and into a 50 ohm receiver.

INTERNAL TEMPERATURE CONTROLLED CRYSTAL OSCILLATOR (TCXO)

Accuracy:	Better than ±1 ppm at 15° to 35° C
(After calibration at 25° C)	Better than ±3 ppm at 10° to 45° C
Aging:	Less than ±2 ppm/year

CLOCK OSCILLATOR (2.16 MHz)

Accuracy:	±0.02%

SPECTRAL PURITY

NOTE

All level observed with the NAV-750 output attenuator set to -10 dBm. However, other level may be used for convenience to meet test equipment requirements.

Harmonics:	30 dB below carrier, maximum (108.000 through 335.000 MHz).

(cont'd next page)

SPECTRAL PURITY (cont'd)

Close-In Noise (Single-sideband Noise):

At 108.000 MHz	78 dB below carrier at ±15 kHz in 300 Hz resolution bandwidth, or 83 dB below carrier at ±15 kHz in 100 Hz resolution bandwidth.
At 130.000 MHz	78 dB below carrier at ±15 kHz in 300 Hz resolution bandwidth, or 83 dB below carrier at ±15 kHz in 100 Hz resolution bandwidth.
At 334.700 MHz	74 dB below carrier at ±20 kHz in 300 Hz resolution bandwidth, or 79 dB below carrier at ±20 kHz in 100 Hz resolution bandwidth.

Harmonic Spurious Noise:

NOTE

The NAV-750 phase-lock control frequency is 12.5 kHz.

At 108.000 MHz	75 dB below carrier at ±12.5 kHz, and 83 dB below carrier at ±25.0 kHz in 300 Hz resolution bandwidth.
At 334.700 MHz	66 dB below carrier at ±12.5 kHz, and 77 dB below carrier at ±25.0 kHz in 300 Hz resolution bandwidth.

Broadband Noise:

At 108.000 MHz	82 dB below carrier at ±100 kHz in 1 kHz resolution bandwidth.
At 334.700 MHz	82 dB below carrier at ±100 kHz in 1 kHz resolution bandwidth.

Residual FM: (Post-detection noise bandwidth, 20 Hz to 15 kHz)

At 108.000 MHz	±200 Hz p-p, or less.
At 334.700 MHz	±400 Hz p-p, or less.

MODULATION

AM Depth: . . . . . G/S.....0% to 93%
VOR, LOC, & COMM.....0% to 98%

Accuracy: . . . . . As listed below, with front panel Modulation controls in CAL position.

NOTE

* Indicates 0-100 meter scale is selected. All others on 0-30% Modulation Scale. All values are for single-tone of the indicated frequency.

Modulation Frequency	RF Range	Acceptable Level of Modulation (absolute) at RF output Connector	Meter Indication Tolerance Referenced to Absolute Value at RF output Connector
30 Hz	VOR	30%(28.8 to 31.2)	±1.2% Modulation
9960 Hz	VOR	30%(28.8 to 31.2)	±1.2% Modulation
90 Hz	LOC	20%(19.2 to 20.8)	±0.8% Modulation
150 Hz	LOC	20%(19.2 to 20.8)	±0.8% Modulation
90 Hz	G/S	*40%(38.4 to 41.6)	±1.6% Modulation
150 Hz	G/S	*40%(38.4 to 41.6)	±1.6% Modulation
1020 Hz	Comm	30%(28.8 to 31.2)	±1.2% Modulation

(cont'd next page)

SPECIFICATIONS

NAV-750A

TONES

Distortion: (Measured at Sum of Tone Jack or individual Tone Jacks)

9960Hz	1.5% Max.
30Hz Var	0.5% Max.
30Hz Ref	0.5% Max.
1020Hz	0.5% Max.
90Hz	0.4% Max.
150Hz	0.4% Max.

Frequencies:

90 Hz 150 Hz 30 Hz Ref. 30 Hz Var.	These tones are derived from the 2.16 MHz crystal oscillator and therefore reflect the accuracy of the oscillator (±0.02%).
9960 Hz	Phase-locked to 30 Hz Ref. tone which is derived from the 2.16 MHz crystal oscillator.
1020 Hz	±0.5%

NOTE

Tone distortion should increase no more than 0.2% at the DEMOD jack.

DDM ACCURACY (Theoretical - not measured)

COMPOSITE AUDIO ERROR = Centering Error +.02% DDM Setting (.00025 DDM)

$$\text{PERCENTAGE OF MODULATION ERROR} = \text{DDM setting} \times \frac{\left[\begin{array}{c}\text{measured, single tone, \% of modulation at centering}\end{array}\right] - \left[\begin{array}{c}\text{desired \% of modulation at centering}\end{array}\right]^{*}}{\left[\begin{array}{c}\text{Desired \% of modulation at centering}\end{array}\right]}$$

TOTAL ERROR = Composite Audio Error + Percentage of Modulation Error

* desired % of modulation at centering for LOCALIZER 20%
* desired % of modulation at centering for Glide Slope 40%

DDM setting	Composite Audio Error (DDM)	max % of Mod Error (DDM)	TOTAL (maximum error) (DDM)
LOCALIZER:			
.046	.00101	.00230	.00331
.093	.00102	.00465	.00567
.155	.00103	.00775	.00878
.200	.00104	.01000	.01104
GLIDE SLOPE:			
.045	.00101	.00225	.00326
.091	.00102	.00455	.00557
.175	.00104	.00875	.00979
.400	.00108	.02000	.02108

SPECIFICATIONS

NAV-750A

Technical Summary

VOR SECTION:

Bearing Selection:	Twelve preset bearings each 30°. Additional +10° and -10° steps from any bearing selected. Bearing control provides continuous bearing adjustment in 0.01° or 0.05° steps.
Bearing Accuracy:	±0.05° on all bearings.
Bearing Monitor:	By independent counter; displays bearing to 0.01° resolution.
VOR Tones:	30Hz REF and 30Hz VAR tones derived from 2.16 MHz crystal oscillator. 9960 Hz is frequency locked to the 2.16 MHz crystal oscillator.
Ident Tone:	1020 Hz tone may be added from 0 to 60% mod.

LOC SECTION:

Deviation:	±0.046 DDM, ±0.093 DDM, ±0.155 DDM, ±0.200 DDM, and continuously adjustable ±0.4 DDM. One tone may be deleted while the other is at 20%.
Centering Accuracy:	±0.001 DDM (±0.85μA)
Tones:	90Hz and 150Hz tones phase-locked to ±0.1° or phase variable at five time the angle selected by the VOR bearing selector. 1020 Hz tone may be added.

GS SECTION

Deviation:	±0.045 DDM, ±0.091 DDM, ±0.0175 DDM, ±0.400 DDM, and continuously adjustable ±0.8 DDM. One tone may be deleted while the other is at 40%.

(cont'd next page)

GS SECTION:(cont'd)

Centering Accuracy:	±0.001 DDM (±1μA)
Tones:	Same as LOC

COMM SECTION:

Modulation:	1020 Hz tone 0-60% for audio tests. External modulation may also be added.

RF GENERATOR:

Frequency Range:	108 to 156 MHz in 25 kHz increments and 329 to 335 MHz.
Frequency Selection:	Manually by thumbwheel switch. Automatically at a variable rate in 25, 50, 100, or 200 kHz increments, up in frequency only. Auto channeling stops at 117.950 and 135.975 MHz. External channeling is available via Ext. channeling input at rear panel.
Variable Frequency:	±50 kHz minimum to 108 to 156 MHz 150 kHz minimum from 329 to 335 MHz. Generator remains phase locked at all fixed and variable frequencies.
Frequency Accuracy:	Controlled by oven crystal to ±0.0001%.
Frequency Monitor:	By independent counter to 1 kHz or 0.1 kHz resolution. Counter time base ±0.0001%.
Remote Function:	Frequency in use fed to rear panel as 2 out of 5 channeling and parallel BCD. Remote channeling follows manual or auto selection.

(cont'd next page)

RF GENERATOR: (cont'd)

Modulation Selection:	Automatic by frequency selected, VOR mod applied if on any VOR freq, LOC mod applied if on any LOC freq, GS mod applied if on any LOC freq and LOC/GS switch in GS position.
EXTERNAL MODULATION:	May be added to any signal through rear panel jack. (J18). On sets S/N 381 & on, J-18 must be terminated with 100 ohms or less when External Modulation is not used.
Impedance (J18):	1K ohm Nominal
Sensitivity:	For NAV-750A units through S/N 380: 9.1V p-p (±0.6V) = 30% (MASTER MOD in Cal position). For NAV-750A units S/N 381 & on: 9.1V p-p (±0.6V) = 90% (MASTER MOD in Cal position).
DEMOD OUTPUT:	For any signal at a rear panel jack. (J23).
Impedance (J23):	Minimum Resistance: 1K ohms:
DC Voltage:	3.75V (±0.3V)
AC Voltage:	2.72V (±0.2V) = 100% Modulation (±0.2V due to difference in sets)

(cont'd next page)

SPECIFICATIONS

NAV-750A

Technical Summary

REAR PANEL CONNECTORS:	External Modulation Input Composite Tones output VOR 30 Hz VAR Tone output VOR 9960 Hz FM Tone output 1020 Hz Tone output VOR 30 Hz REF Tone output 150 Hz Tone output 90 Hz Tone output RF Demod output AC Power Input (See power requirements next page) External Clock Input Remote Channeling Input Remote Channeling output Remote Frequency output
POWER REQUIREMENTS:	105 to 120 VAC or 220 to 250 VAC, 50 to 400 Hz (Cooling fan 50/60 Hz only. Optional dc cooling fan available for 400 Hz operation)
POWER CONSUMPTION:	250 W Maximum, 110 W Nominal
SIZE:	7.5" high by 16.75" wide by 18.375" deep.
WEIGHT:	Approximately 45 pounds.

SPECIFICATIONS

NAV-750B

RF POWER OUT

Accuracy: . . . . . ±1.5 dBm from -6 dBm to -50 dBm
±2.5 dBm from -50 dBm to -120 dBm

Leakage: . . . . . Less than 3µV @334.700 MHz, 1µV@ 108.000 MHz induced in a two-turn, one inch diameter (#20 gauge wire) loop, measured one inch away from any surface and into a 50 ohm receiver.
(With all unused outputs properly terminated)

INTERNAL TEMPERATURE CONTROLLED CRYSTAL OSCILLATOR (TCXO)

Accuracy: . . . . . Better than ±1ppm at 15° to 35° C
(After calibration at 25° C) . . . . . Better than ±3ppm at 10° to 45° C

Aging: . . . . . Less than ±2ppm/year

CLOCK OSCILLATOR (2.16 MHz)

Accuracy: . . . . . ±0.02%

SPECTRAL PURITY

NOTE

All levels observed with the NAV-750 output attenuator set to -10 dBm. However, other levels may be used for convenience to meet test equipment requriements.

Harmonics: . . . . . 30 dB below carrier, maximum, from 108.000 through 335.000 MHz and 20 dB below carrier, maximum, from 70.000 through 79.000 MHz.

(cont'd next page)

SPECTRAL PURITY (cont'd)

Close-In Noise (Single-sideband Noise):

At 108.000 MHz	78 dB below carrier at ±15 kHz in 300 Hz resolution bandwidth, or 83 dB below carrier at ±15 kHz in 100 Hz resolution bandwidth.
At 130.000 MHz	78 dB below carrier at ±15 kHz in 300 Hz resolution bandwidth, or 83 dB below carrier at ±15 kHz in 100 Hz resolution bandwidth.
At 334.700 MHz	74 dB below carrier at ±20 kHz in 300 Hz resolution bandwidth, or 79 dB below carrier at ±20 kHz in 100 Hz resolution bandwidth.

Harmonic Spurious Noise:

NOTE

The NAV-750 phase-lock control frequency is 12.5 kHz.

At 108.000 MHz	75 dB below carrier at ±12.5 kHz, and 83 dB below carrier at ±25.0 kHz in 300 Hz resolution bandwidth.
At 334.700 MHz	75 dB below carrier at ±12.5 kHz, and 83 dB below carrier at ±25.0 kHz in 300 Hz resolution bandwidth.

Broadband Noise:

At 108.000 MHz	80 dB below carrier at ±100 kHz in 1 kHz resolution bandwidth.
At 334.700 MHz	80 dB below carrier at ±100 kHz in 1 kHz resolution bandwidth.

Residual FM: (Post-detection noise bandwidth, 20 Hz to 15 kHz)

At 108.000 MHz	±200 Hz p-p, or less.
At 334.700 MHz	±400 Hz p-p, or less.

MODULATION

AM Depth . . . . . G/S . . . . . 0% to 93%
VOR, LOC, COMM, & MKR 0% to 98%

Accuracy: . . . . . As listed below, with front panel Modulation controls in CAL position.

NOTE

* Indicates 0-100 Meter scale is selected. (0-100 meter scale is automatically selected for Marker beacon tones.) All others on 0-30% Mod. scale. All values are for single-tone modulation of the indicated frequency. Marker beacon tone maximum modulation depth capability is at least 60% from 70-74 MHz.

Modulation Frequency	RF Range	Acceptable Level of Modulation (absolute) at RF output connector	Meter Indication Tolerance referenced to Absolute Value at RF Output Connector
30 Hz	VOR	30% (28.8 to 31.2)	±1.2% Modulation
9960 Hz	VOR	30% (28.8 to 31.2)	±1.2% Modulation
90 Hz	LOC	20% (19.2 to 20.8)	±0.8% Modualtion
150 Hz	LOC	20% (19.2 to 20.8)	±0.8% Modulation
90 Hz	G/S	*40% (38.4 to 41.6)	±1.6% Modulation
150 Hz	G/S	*40% (38.4 to 41.6)	±1.6% Modulation
1020 Hz	Comm.	30% (28.8 to 31.2)	±1.2% Modulation
400 Hz	Mkr. beacon	95% (92.14 to 97.85)	±3.0% Modulation
1300 Hz	Mkr. beacon	95% (92.14 to 97.85)	±3.0% Modulation
3000 Hz	Mkr. beacon	95% (92.14 to 97.85)	±3.0% Modulation

(cont'd next page)

TONES

Distortion: (Measured at Tone Jack or Individual Tone Jacks)

9960Hz	1.5% Max.
30Hz Var	0.5% Max.
30Hz Ref	0.5% Max.
1020Hz	0.5% Max.
90Hz	0.4% Max.
150Hz	0.4% Max.
400Hz	0.7% Max.
1300Hz	0.7% Max.
3000Hz	0.7% Max.

Frequencies:

90 Hz, 150 Hz, 30 Hz Ref., 30 Hz Var. — These tones are derived from the 2.16 MHz crystal oscillator and therefore reflect the accuracy of the oscillator. (±0.02%)

9960 Hz — Phase-locked to 30 Hz Ref. tone which is derived from the 2.16 MHz crystal oscillator

1020 Hz	±0.5%
400 Hz	±0.7%
1300 Hz	±0.7%
3000 Hz	±0.7%

NOTE

Tone distortion should increase no more than 0.2% at the DEMOD jack.

DDM ACCURACY (Theortical - not measured)

COMPOSITE AUDIO ERROR = Centering Error +.02% DDM setting

$$\text{PERCENTAGE OF MODULATION ERROR} = \text{DDM setting} \times \frac{\left(\begin{array}{c}\text{measured, single-}\\ \text{tone, \% of modu-}\\ \text{lation at centering}\end{array}\right) - \left(\begin{array}{c}\text{desired \% of}\\ \text{modulation at}\\ \text{centering}\end{array}\right)^{*}}{\left(\begin{array}{c}\text{Desired \% of modulation}\\ \text{at centering}\end{array}\right)}$$

TOTAL ERROR = Composite Audio Error + Percentage of Modulation Error

* desired % of modulation at centering for LOCALIZER 20%
* desired % of modulation at centering for GLIDE SLOPE 40%

DDM setting	Composite Audio Error (DDM)	max % of Mod Error (DDM)	TOTAL (maximum error) (DDM)
LOCALIZER:			
.046	.00101	.00230	.00331
.093	.00102	.00465	.00567
.155	.00103	.00775	.00878
.200	.00104	.01000	.01104
GLIDE SLOPE:			
.045	.00101	.00225	.00326
.091	.00102	.00455	.00557
.175	.00104	.00875	.00979
.400	.00108	.02000	.02108

SPECIFICATIONS

NAV-750B

Technical Summary

VOR SECTION:

Bearing Selection:	Twelve preset bearings each 30°. Additional +10° and -10° steps from any bearing selected. Bearing control provides continuous bearing adjustment in 0.01° or 0.05° steps.
Bearing Accuracy:	±0.05° on all bearings.
Bearing Monitor:	By independent counter; displays bearing to 0.01° resolution.
VOR Tones:	30Hz REF and 30Hz VAR tones derived from 2.16 MHz crystal oscillator. 9960Hz is frequency locked to the 2.16 MHz crystal oscillator.
Ident Tone:	1020Hz tone may be added from 0 to 60% mod.

LOC SECTION:

Deviation:	±0.046 DDM, ±0.093 DDM, ±0.155 DDM, ±0.200 DDM, and continuously adjustable ±0.4 DDM. One tone may be deleted while the other is at 20%.
Centering Accuracy:	±0.001 DDM (±0.85μA)
Tones:	90Hz and 150Hz tones phase-locked to ±0.1° or phase variable at five times the angle selected by the VOR bearing selector. 1020Hz tone may be added.

GS SECTION

Deviation:	±0.045 DDM, ±0.091 DDM, ±0.175 DDM, ±0.400 DDM, and continuously adjustable ±0.8 DDM. One tone may be deleted while the other is at 40%.

(cont'd next page)

SPECIFICATIONS

NAV-750B

Technical Summary

GS SECTION: (cont'd)

Centering Accuracy:	±0.001 DDM (±1μA)
Tones:	Same as LOC

COMM SECTION:

Modulation:	1020 Hz tone 0-60% for audio tests. External modulation may also be added.

MARKER BEACON SECTION:

Tones:	1020, 400, 1300, and 3000 Hz
Modulation:	Selectable at 95±3% Modulation in CAL position. (Variable 0-98% in UNCAL positions).

RF GENERATOR:

Frequency Range:	70 to 79.9 MHz, 108 to 156 MHz in 25 kHz increments and 329 to 335 MHz.
Frequency Selection:	Manually by thumbwheel switch. Automatically at a variable rate in 25, 50, 100, or 200 kHz increments, up in frequency only. Auto channeling stops at 117.950 and 135.975 MHz. External Channeling is available via Ext. channeling input at rear panel.
Variable Frequency:	±50 kHz minimum at 108 to 156 MHz and ±150 kHz minimum from 329 to 335 MHz. Generator remains phase locked at all fixed and variable frequencies.
Frequency Accuracy:	Controlled by oven crystal to 0.0001%.
Frequency Monitor:	By independent counter to 1 kHz or 0.1 kHz resolution. Counter time base ±0.0001%.

(cont'd next page)

RF GENERATOR (cont'd)

Remote Function:	Frequency in use fed to rear panel as 2 out of 5 channeling and parallel BCD. Remote channeling follows manual or auto selection.
Modulation Selection:	Automatic by frequency selected. VOR mod applied if on any VOR freq. LOC mod applied if on any LOC freq, G/S mod applied if on any LOC freq and LOC/GS switch in GS position. Tone frequency selectable for MARKER BEACON operation.
EXTERNAL MODULATION:	May be added to any signal through rear panel jack. (J18) When not used, J-18 must be terminated with 100 ohms or less.
Impedance (J18):	1K ohm Nominal
Sensitivity:	9.1V p-p (±0.6V) = 90% (MASTER MOD in Cal position)
DEMOD OUTPUT:	For any signal at a rear panel jack (J23).
Impedance (23):	Minimum Resistance 1K ohms
DC Voltage:	3.75V (±0.3)
AC Voltage:	2.72V (±0.2) = 100% Modulation (±0.2V due to difference in sets)

SPECIFICATIONS

NAV-750B

Technical Summary

REAR PANEL CONNECTORS:	External Modulation Input Composite Tones output VOR 30Hz VAR tone output VOR 9960Hz FM Tone output 1020Hz Tone output VOR 30Hz REF Tone output 150Hz Tone output 90Hz Tone output RF Demod output AC Power Input (See power requirements below) External Clock Input Remote Channeling Input Remote Channeling output Remote Frequency output
POWER REQUIREMENTS:	105 to 120 VAC or 320 to 250 VAC, 50 to 400Hz (Cooling fan 50/60 Hz only. Optional dc cooling fan available for 400 Hz operation)
POWER CONSUMPTION:	250 W Maximum, 110 W Nominal
SIZE:	7.5" high by 16.75" wide by 18.375" deep.
WEIGHT:	Approximately 45 pounds

SECTION II

INSPECTION

2.1 INCOMING INSPECTION. This instrument has been carefully inspected for mechanical and electrical defects. It should be physically free of scratches or mars and in perfect electrical order upon receipt. To confirm this, the instrument should be carefully inspected for physical damage. Also, check for supplied accessories and then test the electrical performance using the procedures outlined in Section V, Performance Evaluation Test Procedures of this manual. If there is any damage or deficiency, file a claim with the carrier and refer to the Warranty portion of Section I of this manual. If it is necessary to ship the instrument, refer to Warranty paragraph 1-K for shipping instructions.

2.2 GROUNDING REQUIREMENTS. To protect operating personnel, the National Electrical Manufacturer's Association (NEMA) recommends that the instrument panel and cabinet be grounded. All IFR instruments are equipped with a three-conductor power cord which, when plugged into an appropriate receptacle, grounds the instrument. The offset pin on the power cord three-prong connector is the ground wire.

2.2.2 To preserve the protection feature when operating the instrument from a two-contact outlet, use a three-prong to two-prong adapter and connect the green pigtail on the adapter to ground.

2.3 BENCH/RACK INSTALLATION. This instrument is normally shippped as a bench-type instrument (unless ordered specially as a rack type) with plastic feet in place. Conversion to a rack-mounted instrument can be accomplished by using the Rack Mounting Kit available from the factory upon request.

2.4 CLEANING. It is prudent to remove dust, cobwebs, etc., out of the test set prior to inspection, repair, or calibration.

2.4.1 It is recommended that dust removal be done with a hand controlled, low pressure (25-50 psi), dry air jet. The fan blades, rotor, and frame should be wiped with a lint-free cloth moistened with rubbing alcohol. The rear panel should be cleaned with a dry cloth only. The front panel may be cleaned whenever necessary with a lint-free cloth moistened with rubbing alcohol.

2.4.2 During cleaning process, avoid breaking wires or shorting

2.5 INSPECTION RECOMMENDATIONS. The general condition of the NAV-750 series test sets, as well as possible electrical or mechanical faults, can be confirmed through judicious visual inspection. However, experience has indicated that deliberate movement of descrete components on PC boards or other assemblies can complicate or cause problems in circuits where none existed before. Therefore, the factory recommends a close visual inspection without touching the components. Electrical faults can often be detected during normal operation and/or isolated using the Performance Evaluation Test Procedures in Section V of this manual.

2.5.1 The following is a list of recommended inspection items which may be used as a guide for a visual inspection:

A. Bearing Pickoff Sensors. The bearing pickoff sensors may be located by looking at the Top View Fig 8-1 Accumulated dirt can cause sluggish operation or failure of the bearing pickoff sensors. It may be cleaned with a soft brush moistened with rubbing alcohol.

B. Chassis. Includes anything mechanical or made from metal. Inspect for tightness of sub-assemblies, damaged connectors, corrosion or damage to the metal surfaces, etc. Surface corrosion may indicate damage inside the affected part.

C. Capacitors. Inspect for loose mounting, body damage, case damage, leakage or corrosion around leads.

D. Jacks. Inspect all coax jacks for loose or broken parts, cracked insulation, bad contacts, etc. Do not disassemble connectors within the test set.

E. Potentiometers. Any potentiometer that feels rough when rotated or produces circuit or voltage irregularities should be checked with an ohmmeter for proper operation.

F. Resistors, Inspect all types of resistors for cracked, broken or charred or blistered bodies and loose or corroded soldering connections.

G. Printed Circuit Boards. Check connectors for corrosion and damage and the mating plugs for similiar damage. Inspect all mounted components for damage including crystals and IC's. The boards should be free of all foreign material.

H. Semiconductors. Inspect all diodes, rectifiers and transistors for cracked, broken, charred or discolored bodies. Check ends of components for seals around leads.

I. Switches. Examine all toggle switches for loose levers and terminals, loose body to frame condition. The line switch contacts should not be bent nor the switch action too loose. The thumbwheel switches should have definite detents and not feel loose.

J. Transformer. Inspect the transformer for signs of excessive heating, broken or charred insulation, loose mounting hardware and other abnormal conditions.

K. Wiring. Inspect all wiring of chassis for broken or loose ends and connections and proper dress relative to other chassis parts. All laced wiring should be tight with ends securely tied.

2.6 REPACKING FOR SHIPMENT. The following is a general guide for repackaging for shipment. If you have any questions, contact the IFR Shipping Department. See Section I, Paragraph K in Warranty Section.

NOTE

If the instrument is to be shipped to IFR for service or repair, attach a tag to the instrument identifying the owner and indicate the service or repair to be accomplished; include the model number and full serial number of the instrument. In any correspondence identify the instrument by prefix, model and serial number.

2.6.1 Place instrument in original container if available. If original container is not available, contact IFR for shipping instructions.

2.6.2 Do not return the instrument or its component parts to IFR, Inc. for repair without first receiving authorization from IFR, Inc. Refer to paragraph 1-H of the warranty section for complete instructions.

SECTION III

NAVIGATION RADIO AIDS SIGNALS AND NAV-750 SERIES TEST SET OPERATING PROCEDURES

3.1 INTRODUCTION. The NAV-750 series bench test sets simulate the VHF OMNIDIRECTIONAL RANGE (VOR) station signals, the INSTRUMENT LANDING SYSTEM (ILS) guidance beams, VHF communications signals, and the MARKER BEACON station (NAV-750B model only) signals used in conjunction with the ILS. The following paragraphs describe the signals generated by these ground navigation aids. The final portion of this section provides general operating procedures for testing NAV-COMM systems.

3.2 VOR STATION. VOR stations radiate bearing signals in the 108.000 to 117.950 MHz band in all directions, much like spokes radiate from the hub of a wheel. These bearings are numbered from 000° to 359° (clockwise) like a compass card or circle. All VOR stations are oriented so that the 000° bearing from the station points to the MAGNETIC NORTH pole. Therefore, all VOR bearing information is "Magnetic" and not to be confused with "True North" or "True Bearings".

3.2.1 VOR stations radiate only bearing information FROM the station and each "FROM" bearing is called a RADIAL.

3.2.2 The basic principle involved in producing RADIALS is the radiation of two 30 Hz tones that vary in phase relationship from 0° to 359°. One 30 Hz tone, called the 30 Hz REFERENCE signal, is stationary in that it is constant in phase all around the VOR antenna. The other 30 Hz tone, called the 30 Hz VARIABLE signal, varies in phase in relation to the reference signal according to rotation around the VOR antenna. For example, as the direction around the VOR antenna increases clockwise from Magnetic North (000°), the two 30 Hz signals become increasingly out of phase until they are again in phase at 360° (000°). Therefore the phase relationship, in degrees, between the two signals is the same as the MAGNETIC BEARING FROM the VOR station to the point of reception.

3.2.3 Both 30 Hz signals are transmitted at a single carrier frequency. An FM/AM multiplexing technique is used to place the 30 Hz REFERENCE signal on the VOR carrier. First, the 30 Hz signal is used to Frequency modulate a 9960 Hz subcarrier. Then the 9960 Hz subcarrier is placed on the 108.000 to 117.950 MHz RF carrier as Amplitude Modulation.

3.2.4 The VARIABLE 30 Hz signal, which varies in phase with respect to the 30 Hz REFERENCE signal, is placed directly on the VOR RF carrier via a special antenna array as amplitude modulation. The signal at the aircraft receiver output is two separate 30 Hz signals, one as reference and the other a signal that is phased in respect to the reference signal.

3.2.5 The VOR receiver measures the phase relationship between the 30 Hz signals and displays the information as a RADIAL. On aircraft equipped with RADIO MAGNETIC INDICATORS (RMI), the double barralled pointer is usually the VOR pointer and the head of the pointer always points to the VOR station. The tail of this pointer indicates the RADIAL.

3.2.6 The COURSE DEVIATION INDICATOR (CDI) of the VOR receiver system is an instrument designed to provide the pilot with a means to guide his aircraft along a selected course TO or FROM a VOR station. The basic CDI consists of a vertical needle or pointer capable of deflecting left and right of center, a course selection control, and a TO-FROM window which indicates whether the selected course will take the aircraft TO or away FROM the VOR station. The vertical pointer of the CDI deflects towards the selected course. FOR example, if the vertical pointer deflects to the left, the aircraft is to the right of the selected course and a heading correction to the left will bring the aircraft back to the selected course. When the vertical needle is centered, the aircraft is on the selected course. Maximum pointer deflection, either left or right of center, represents approximately 10° course deviation.

3.2.7 All NAV-750 models simulate all signals radiated by the VOR ground navigation facility. All VOR frequencies are available via thumbwheel selector switches. Output power of the NAV-750 may be adjusted with the calibrated output attenuator. VOR TO and FROM bearings in .01° increments is possible and a 1020 Hz Ident tone may be added for audio testing.

3.3 INSTRUMENT LANDING SYSTEM. The Instrument Landing System (ILS) consists of two guidance systems that radiate very narrow beams to provide approaching aircraft with precise lateral and vertical guidance to the airport runway.

3.3.1 The lateral guidance portion of the ILS, called the LOCALIZER (LOC), transmits two narrow horizontally parallel beams. One beam is modulated with a 90Hz tone and the other is modulated with a 150 Hz tone. The antennas for the two beams are positioned so that the beams overlap laterally to form an even narrower wedge of equal 90 and 150 Hz tone values. This narrow wedge is the Localizer on-course zone. As long as the aircraft remains in the on-course zone, the aircraft localizer receiver senses that the 90 and 150 Hz tones are balanced and the receiver keeps the COURSE DEVIATION INDICATOR (CDI) pointer centered. If the aircraft deviates from the on-course zone and is displaced more into the 90 or 150 Hz tone beam, the aircraft localizer receiver senses an unbalance between the two tones in that one tone increases in amplitude and the other decreases in amplitude. The resultant difference between the tone amplitudes causes the CDI pointer to be deflected. The predominant tone determines the direction of CDI pointer deflection. The amount of CDI pointer deflection which is directly proportional to aircraft displacement from the on-course zone in degrees, is determined by the magnitude of the difference in tone amplitude. For uniformity and standardization purposes, this tone magnitude difference is expressed in a nondimensional number called DDM, which stands for Difference in Depth of Modulation. DDM numbers are obtained from Modulation percentage figures as follows:

$$DDM = \frac{M_1 - M_2}{100}$$

where M_1 = Larger Modulation percentage value (either 90 or 150 Hz tone Beam)
M_2 = Smaller Modulation percentage value
DDM = Difference in Depth of Modulation

3.3.2 The vertical guidance portion of the ILS, called the GLIDE SLOPE (G/S) is obtained in a manner similar to the LOCALIZER system except that the beams are arranged vertically to provide vertical guidance down to the runway. As in the LOCALIZER guidance system, two narrow beams overlap to form an on-course zone of equal signal strength which slants up from the G/S antennas. If the approaching aircraft descending along the approach course stays within the G/S on-course zone, the G/S receiver senses that the 90 and 150 Hz tones are balanced (0 DDM) and therefore the G/S deviation indicator horizontal pointer remains centered. If the aircraft deviates from the G/S on-course zone, the receiver will sense an unbalance in tone values. The G/S indicator horizontal pointer will then deflect up or down, depending upon the location of the on-course zone in relation to the aircraft, and the amount of deflection will be determined by the DDM.

3.3.3 All NAV-750 models simulate the LOCALIZER tone modulated RF beams precisely at all FAA designated frequencies and the GLIDE SLOPE tone modulated RF beams at corresponding paired frequencies. Specific deviations from LOCALIZER and GLIDE SLOPE on-course zones are simulated with precise LOC and G/S switch positioned DDM values that correpond to 90 and 150 Hz relative tone modulation percentage values (see Table 3-2). DDM values are produced by precise attenuation of one of the two tones as determined by the LOC and G/S DDM switch positions.

3.3.3.1 These specific DDM switch positions correspond to half standard, standard, full scale, and more than full scale LOC and G/S deviation indicator pointer deflections. Clockwise DDM switch position values, as well as cw rotation of the Variable DDM controls, correspond to right CDI pointer deflection and up deflection of the G/S deviation pointer. This relationship is further illustrated as follows:

LOC DDM Selector Rotation	Attenuated Tone	CDI LOC Pointer Movement	Aircraft Position
RIGHT	150 Hz	RIGHT	Left on LOC
LEFT	90 Hz	LEFT	Right on LOC

G/S DDM Selector Rotation	Attenuated Tone	CDI G/S Pointer Movement	Aircraft Position
RIGHT	90 Hz	UP	Low on G/S
LEFT	150 Hz	DOWN	High on G/S

3.3.3.2 DDM values are obtained by attenuation of either the 90 or 150 Hz tone. In addition, each DDM selector switch has 90 and 150 Hz tone positions used to select one of the two tones only for warning flag checks. Output power is adjustable with the calibrated output attenuator.

3.4 MARKER BEACONS AS USED WITH ILS. Marker beacons identify specific locations in space along the Localizer approach course by radiating two or three narrow fan shaped beams upward from transmitters located along the approach course. Each Marker Beacon Beam intersects the Localizer and Glide Slope beams and is tone modulated and keyed according to transmitter location along the approach course. The Outer Marker (OM) beacon, located about five miles from the approach runway threshold, is modulated with a 400 Hz tone keyed at a continuous rate of two dashes per second.

(cont'd next page)

The Middle Marker (MM) beacon, located about 3500 feet from the approach runway threshold, is modulated with a 1300 Hz tone keyed with alternate dots and dashes at a rate of 95 dot/dash combinations per minute. The Inner Marker (IM) beacon, located about 600 feet from the approach runway threshold, is modulated with 3000 Hz tone keyed at rate of six dots per second. An Inner Marker beacon is not used with all Instrument Landing Systems.

3.4.1 As the approaching aircraft, flying along the localizer course, passes over the Marker Beacon transmitters, the Marker Beacon receiver receives the Mkr Bcn signal and provides the modulating tone for the aircraft auido system. In addition, the Marker Beacon receiver activates the appropriate indicator light according to the keyed tone.

3.4.2 Only the NAV-750B model test set simulates the Marker Beacon. By selecting 75 MHz with the FREQUENCY selector switches, the NAV-750B output will be 75 MHz with tone modulation as selected by the METER FUNCTION and TONE SELECT SWITCH. The tone modulation is variable from 0 to 98%. The RF output may be varied from 70 to 79.9 MHz with the FREQUENCY selector switches. Output power is adjustable using the calibrated output attenuator.

3.5 NAV-750 Series BENCH TEST SET SIMULATION of VHF COMMUNICATION CHANNELS. All NAV-750 series bench test sets generate COMM frequencies from 118.000 through 159.750 MHz. A 1020 Hz tone automatically modulates the RF signal, when the test set is on a COMM frequency, at 30%. Modulation may be varied from 0 to 60% with the 1020 Hz modulation level control. RF output is variable via the calibrated output attenuator.

3.6 NAV-750 SERIES CONTROLS, INDICATORS AND CONNECTORS. The NAV-750 series test front and rear panels are illustrated in Figure 3-1. Control, indicator and connector functional descriptions are provided in Figures 3-2 and 3-3.

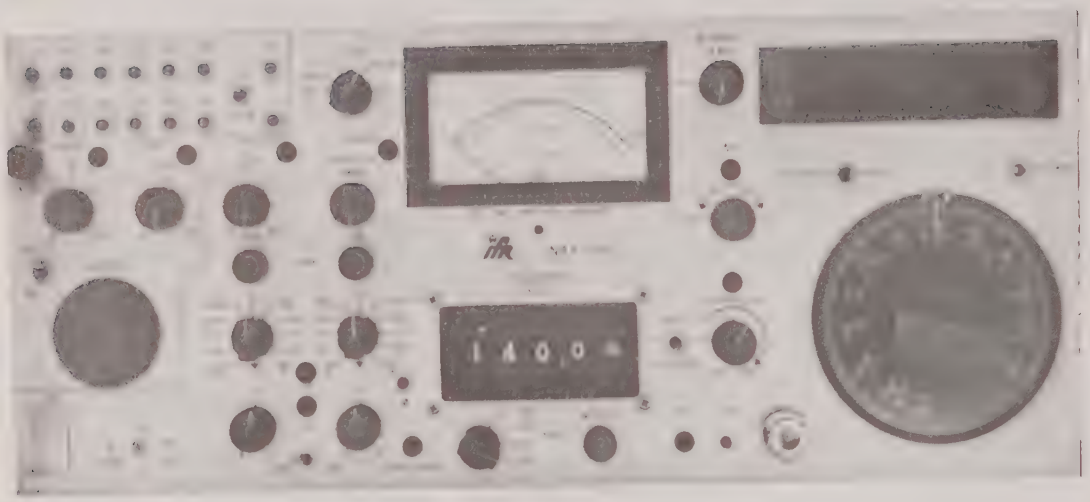

NAV-750/A

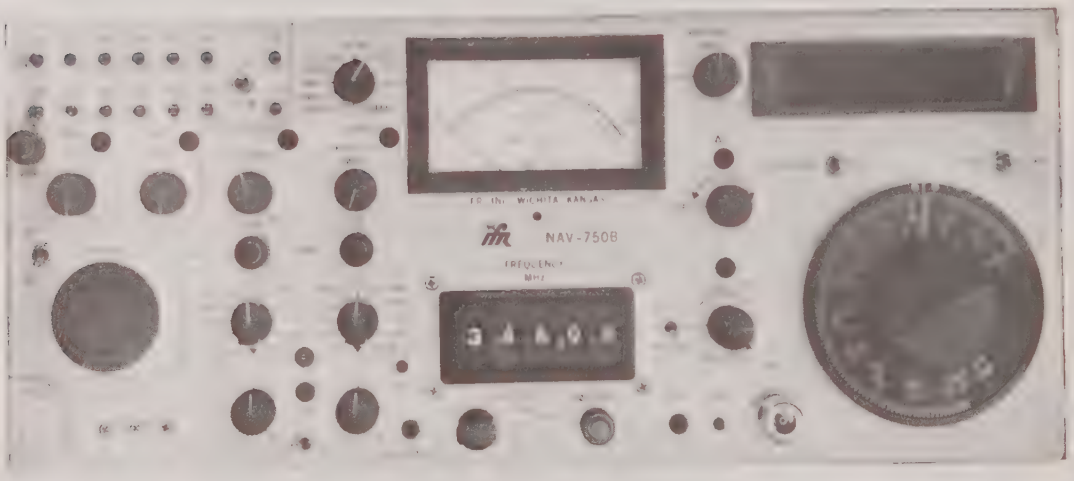

NAV-750B

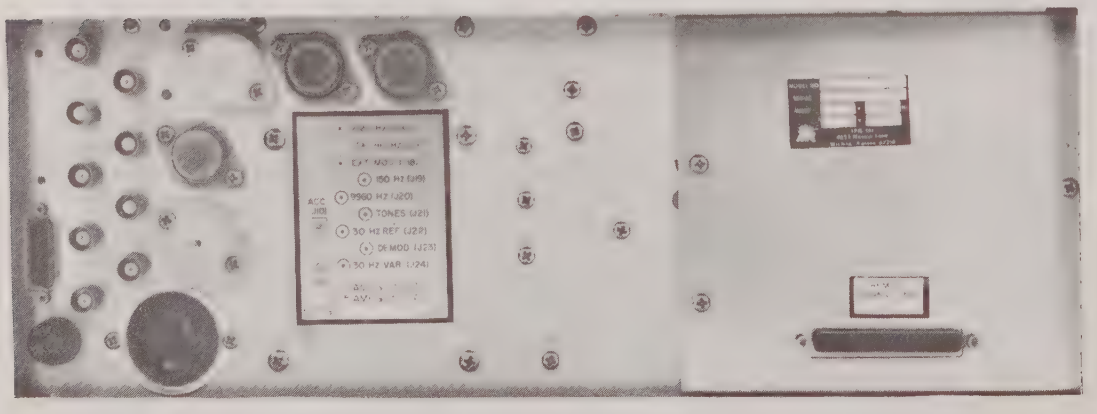

NAV-750/A/B BACK PANEL

Fig. 3-1 NAV-750 SERIES FRONT AND BACK PANEL

TABLE 3-2

Correspondence Chart for 90 and 150Hz Tones

LOCALIZER

Tone Difference Values			Aircraft Receiver Course Deviation Indicator (CDI)	
90 and 150 Hz % Modulation	DDM	dB	Deflection	Microamps
20 and 20	0	0	Centered	0
17.7 and 22.3	0.046	2.007	Half Standard	45
15.35 and 24.65	0.093	4.117	Standard	90
12.25 and 27.75	0.155	7.102	Full Scale	150
10.00 and 30.00	0.200	9.542	More than full scale	194
0.00 and 40.00	0.400	Infinity	Full one tone, other tone off	387

NOTE: Standard CDI course deflection = 60% of Full Scale (linear movement)
0.001 DDM = 2.750 mVrms
Deflection in microamps applies to indicators with full scale deflection current of 150 microamps

GLIDE SLOPE

Tone Difference Values			Aircraft Receiver Glide Slope Deviation Indicator	
90 and 150 Hz % Modulation	DDM	dB	Deflection	Microamps
40 and 40	0	0	Centered	0
37.75 and 42.25	0.045	0.978	Half Standard	39
35.45 and 44.55	0.091	1.985	Standard	78
31.25 and 49.75	0.175	3.682	Full Scale	150
20.00 and 60.00	0.400	9.542	More than full scale	343
0.00 and 80.00	0.800	Infinity	Full one tone, other tone off	686

NOTE: Standard G/S indicator deflection = 52% of full scale (linear movement)
0.001 DDM = 2.750 mVrms
Deflection in microamps applies to indicators with full scale deflection current in 150 microamps

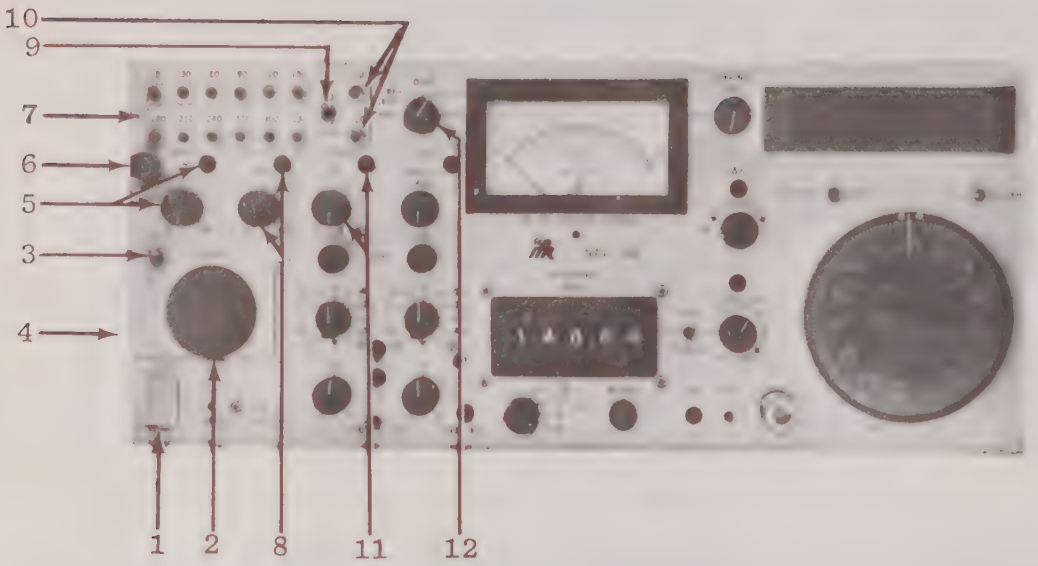

1. AC POWER LINE SWITCH. Applies power to test set. Switch is illuminated when power is ON.

2. VARIABLE BEARING CONTROL. This control smoothly increases the VOR Bearing when rotated clockwise and decreases the VOR Bearing when rotated counterclockwise. The bearing incremental change depends upon the position of the .01-.05 Degree Select Switch.

3. .01 or .05 DEGREE VARIABLE BEARING SELECT SWITCH. This control selects 0.01 or 0.05 degree incremental bearing changes generated by the BEARING control as it is rotated.

4. AUDIO LEVEL CONTROL The audio level applied to the speaker is adjusted with this control. During channeling, when the AUTO-MANUAL channeling switch is on AUTO, a short tone burst aurally indicates when the test set is advanced to a different frequency.

5. 30 Hz TONE MODULATION (VAR.) LEVEL CONTROL AND UNCAL INDICATOR. When set fully counterclockwise in the detent position, the 30 Hz tone modulation level in the VOR mode, is set to 30%. By rotating this control clockwise, the modulation level can be varied from 0 to 60%. The UNCAL indicator is on whenever the control is not in the calibrated detent position.

Figure 3-2 Controls, Indicators, and Connectors (Sheet 1 of 8)

6. VOR MODE INDICATOR. This indicator is on when the test set is operating in the VOR mode.

7. VOR BEARING SELECT PUSHBUTTON SWITCHES. Depressing any one of these twelve switches, labeled 0 to 330, sets the VOR bearing. The switches may be pressed in any sequence.

8. 9960 Hz TONE MODULATION LEVEL CONTROL AND UNCAL INDICATOR. When set fully counterclockwise in the detent position, the 9960 Hz tone modulation level, in the VOR mode, is set to 30%. By rotating this control clockwise, the modulation level can be varied from 0 to 60%. The UNCAL indicator is on whenever the control is not in the calibrated detent position.

9. TO-FROM BEARING SWITCH. This switch sets the phase relationship between the 30 Hz VAR and 30 Hz REF. tones to make the selected bearing either a TO or FROM bearing. The VOR receiver under test TO-FROM indication should agree with the switch position.

10. +10 and -10 DEGREE BEARING PUSHBUTTON SWITCHES. When depressed, these switches add or subtract exactly 10 degrees from the VOR bearing.

11. 1020 Hz IDENT TONE MODULATION LEVEL CONTROL AND UNCAL INDICATOR (NAV-750/A). When rotated fully counterclockwise into the detent (CAL) position the 1020 Hz tone is off in LOC and VOR modes and on at 30% mod level in COMM mode. On COMM, the tone may be deleted by setting the control to zero, and then varied 0 to 60% mod level. On VOR, the tone is added with clockwise rotation for mod levels from 0 to 60%. The UNCAL indicator is on whenever the control is not in the calibrated detent position.

11A. 1020 Hz IDENT, TONE AND MKR BEACON TONE MODULATION LEVEL CONTROL AND UNCAL INDICATOR (NAV-750B). Operation of this control for the 1020 Hz Ident. tone is identical to that described in item 11. When a MKR Beacon tone is selected while in the MKR Beacon mode, the tone modulation level is automatically set to 95% with the tone modulation level control in the CAL detent. Out of the detent, the control varies the modulation level from 0 to 98%. The UNCAL indicator is on when the control is not in the detent position.

12. METER FUNCTION SWITCH (NAV-750/A). This switch selects the range and function of the front panel meter. The BRG and ZERO positions are for accuracy checks of the VOR output signal. In the RF position the meter monitors the RF signal level at the input of the output attenuator. The 0-30 and 0-100 positions are for setting or monitoring the modulation level of the test set output RF signal.

Figure 3-2 Controls, Indicators, and Connectors (Sheet 2 of 8)

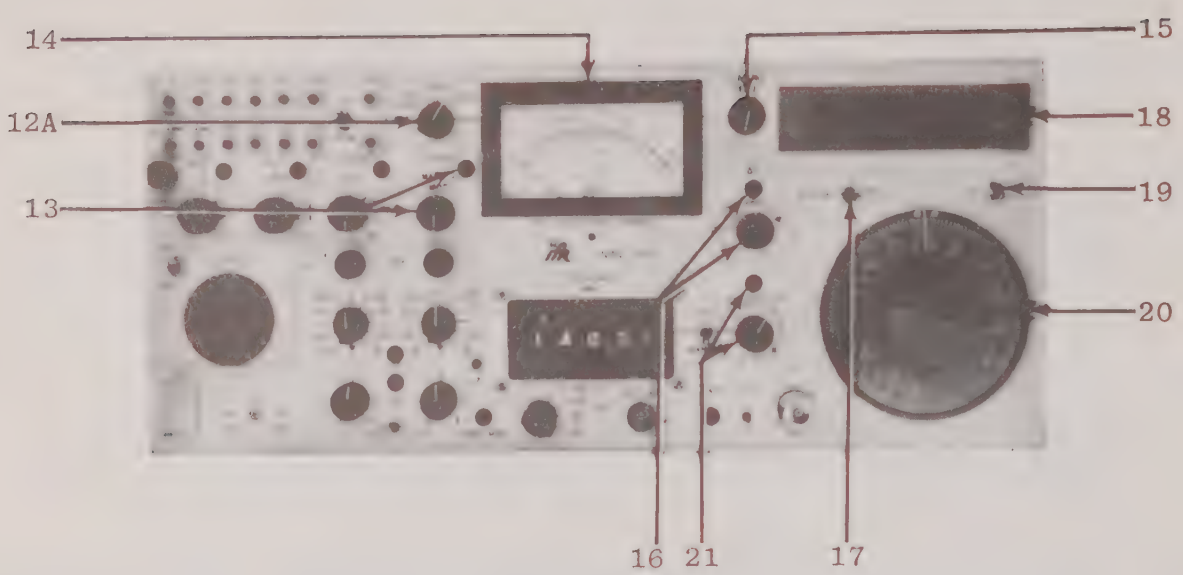

12A. METER FUNCTION AND TONE SELECTOR SWITCH (NAV-750B). On the NAV-750B model test set, this switch has two functions. First, it selects the panel meter range and function. In the BRG and ZERO switch positions, the panel meter indicates the accuracy of the VOR output. In the RF position, the panel meter indicates the test set RF level into the attenuator. The 0-30% and 0-100% positions are for monitoring or setting signal modulation levels. In the last clockwise position of the selector switch, the meter is inoperative with the terminals shorted. This position should be used to protect the meter from damage when the test set is being moved. Second, it selects the output frequency of the internal tone generator. Normally the internal tone generator produces the 1020 Hz audio Ident. tone. However, when the Meter Function and Tone Selector switch is positioned to a marker beacon tone, the internal tone generator produces either 400 Hz, 1300 Hz, or 3000 Hz in place of the 1020 Hz audio Ident tone. Also, when a marker tone is selected, the panel meter is automatically set to the.0 to 100% modulation range.

13. MASTER MODULATION LEVEL CONTROL AND UNCAL INDICATOR. This control when rotated clockwise and all other tone level controls are in the calibration detent (CAL. position), will vary the tone modulation levels from 0% to approximately twice calibrated values or 100%, whichever is greater. The UNCAL indicator is on whenever the control is not in the calibrated detent position.

Figure 3-2 Controls, Indicators, and Connectors (Sheet 3 of 8)

14. METER. The meter indications as related to meter selector switch positions are as follows:
    A) BRG. Bearing deviation in 0.1 degree increments. The number 50 on the lower scale represents zero deviation. Each number to the left of 50 equal to -0.1 degrees and each number to the right of 50 is +0.1 degrees. Thus an indication at 20 is -0.3 degrees deviation and 90 is +0.4 degrees bearing deviation.
    B) ZERO. The bearing check circuitry is set to zero using the Bearing Zero control.
    C) RF. Monitors the RF level at the input of the output attenuator.
    D) 0-30. The top scale is used for modulation values at or below 30%.
    E) 0-100 The lower scale is used for modulation values at or below 100%.

15. BEARING ZERO ADJUST CONTROL. This control sets the bearing check circuitry to zero as indicated by a center scale indication on the meter.

16. ΔF CONTROL AND INDICATOR. When in the detent (full counterclockwise) position, this control has no effect on the RF output frequency. When the control is rotated clockwise, the RF output frequency is variable as follows:

    ±30 kHz in 70 MHz to 79 MHz range (NAV-750B)
    ±50 kHz in 108 MHz to 157 MHz range
    ±150kHz in 329 MHz to 335 MHz range

    The changing frequency is displayed on the BEARING-FREQ display. The ΔF indicator is ON whenever the control is not in the detent position. (See "ΔF Quieting Mode" after Item 14 of Figure 3-3)

17. BEARING-FREQ. DISPLAY SWITCH. This switch selects either output frequency or VOR bearing information for display on BEARING/FREQ display.

18. BEARING-FREQUENCY DISPLAY. The display indicates the VOR bearing or the generator output frequency.

19. kHz - 0.1 kHz FREQUENCY RESOLUTION SWITCH. This switch selects the readout of the display to indicate the output frequency to the nearest 1 kHz or 100 kHz.

20. RF OUTPUT ATTENUATOR. This control sets the RF output level to any value between -120 dBm and -6 dBm.

21. CHANNELING RATE CONTROL AND INDICATOR. This control sets the desired channeling rate when the AUTO-MANUAL frequency control switch is in the AUTO position. Maximum channeling rate is full clockwise rotation of the control. Full counterclockwise position of this control stops automatic channeling. The channeling indicator is ON when the AUTO-MANUAL Frequency Control Switch is in AUTO.

Figure 3-2 Controls, Indicators, and Connectors (Sheet 3 of 8)

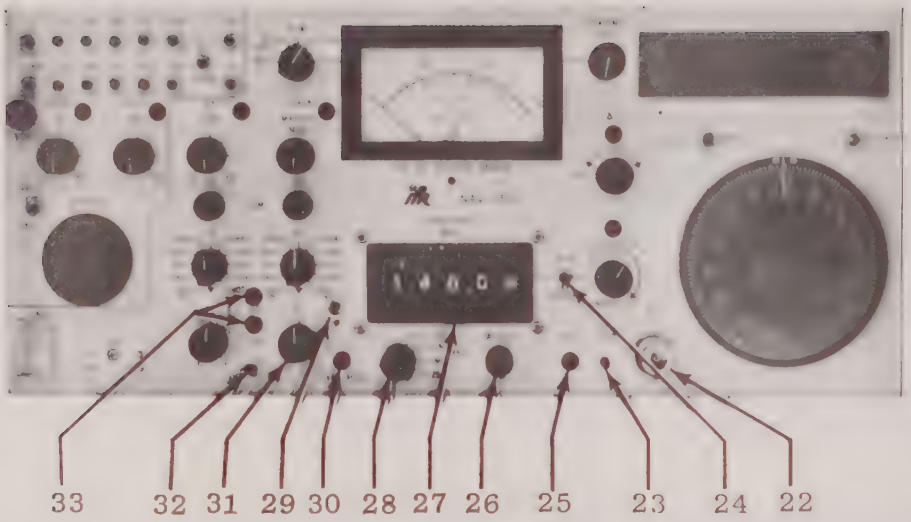

22. RF OUTPUT CONNECTOR (J-3). Output connector, at 50 ohm impedance, that provides RF to receiver under test.

23. MANUAL FREQUENCY STEP SWITCH. This switch is used to advance the RF output one increment each time the switch is pressed. The AUTO-MANUAL Frequency Control switch must be in the AUTO position and the Channeling Rate Control in the full counterclockwise position. (See "ΔF Quieting Mode" after Item 14 of Figure 3-3)

24. AUTO-MANUAL FREQUENCY CONTROL SWITCH. This switch selects AUTOMATIC or MANUAL channeling. The Channeling Indicator will be ON when this switch is in the AUTO position. (See "ΔF Quieting Mode" after Item 14 of Figure 3-3)

25. END CHANNELING INDICATOR. This indicator is on when channeling reaches 117.95 MHz, 135.975 MHz, or 157.95 MHz. Auto channeling will stop at these frequencies.

26. Ø LOCK INDICATOR. When ON, this indicator confirms that the RF generator is controlled by the phase-lock system. When OFF, the generator is out of frequency control.

27. FREQUENCY SELECTOR SWITCHES. These thumbswitches set the output frequency of the RF generator when the AUTO-MANUAL Frequency Control Switch is in the Manual position. When AUTO channeling is used, these switches set the starting frequency.

Figure 3-2 Controls, Indicators, and Connectors (Sheet 5 of 8)

28. CHANNELING FREQUENCY INCREMENT SWITCH. This switch provides four channel spacing choices for automatic channeling; 25, 50, 100 and 200 kHz steps. Automatic channeling increases the output frequency in the selected frequency increment.

29. 90 Hz - 150 Hz PHASE DEVIATION SWITCH. The phase relationship between the 90 Hz and 150 Hz LOC and G/S tones is normally fixed to within ±0.1 degrees.

NOTE

The term "phase relationship" as used here refers to the relative phase position of the 90 and 150 Hz tone signals every 1/30 second from a given time. Actually, the phase difference between the two tones is constantly changing but their relative phase positions, for a given set of circuit constants, are the same every 1/30 second.

For testing purposes, this phase relationship can be varied by retarding the 150 Hz tone relative to the 90 Hz tone 5 degrees for each degree of selected VOR bearing while the Ø pushbutton switch is pressed. For example, selecting 10 degrees VOR bearing and pressing the Ø pushbutton will shift the phase relationship between the two tones 50 degrees. When the VOR bearing is 12 degrees and the Ø pushbutton is pressed, there is a 60 degree phase shift and the amplitude summation of the 90 Hz and 150 Hz tones is greatest.

30. OVERMODULATION INDICATOR. This indicator is ON when the RF carrier modulation level reaches 100%.

31. G/S VARIABLE DDM CONTROL. When the G/S DDM selector switch is pointing down, the G/S VARIABLE DDM control is activated and can then be turned left and right of center to obtain G/S deviation of ±0.8 DDM.

32. LOC - G/S FREQUENCY SELECT SWITCH. This switch provides immediate selection of the G/S frequency that is paired to the selected or displayed LOC frequency. In LOC position, and when a LOC frequency has been selected or channeled, the LOC mode and modulation will be selected. In the G/S position, the G/S mode and modulation will be selected if a LOC-G/S paired frequency is channeled.

33. 90 Hz and 150 Hz TONE OFF INDICATORS. Each indicator is on when its respective tone is OFF. When either the LOC or G/S DDM selector switches are set to 150 or 90 Hz the opposite tone is deleted. The tone deleted is shown by one of the two indicator lamps. Both tones can be deleted at the same time which deletes all LOC or G/S tone output (except for Ident. tones and External Modulation).

Figure 3-2 Controls, Indicators, and Connectors (Sheet 6 of 8)

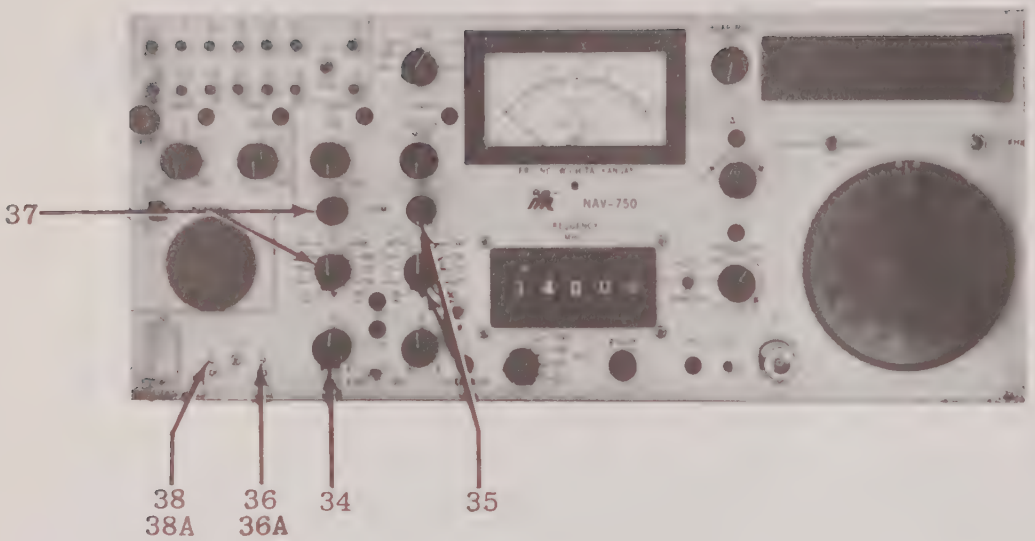

34. LOC VARIABLE DDM CONTROL. When the LOC DDM selector switch is pointing down, the LOC VARIABLE DDM control is activated and can be turned left and right of center to obtain LOC deviation of ±0.4 DDM.

35. G/S DDM SELECTOR SWITCH AND G/S MODE INDICATOR. The G/S DDM Selector Switch provides precise G/S deviations in 0.045, 0.091, 0.175, and 0.400 DDM increments. Right rotation of this selector switch attenuates the 90 Hz tone which simuates "Aircraft Low on G/S condition" and causes the Unit Under Test G/S pointer movement to be up. When the G/S DDM Selector Switch is positioned to either the 90 Hz or 150 Hz detents, only the selected tone is present and the other is off. In the downward position, the Variable DDM control is activated and G/S DDM may be continuously controlled from -0.8 to +0.8 DDM. The G/S Mode Indicator is on when the test set is in the G/S Mode of operation.

36. G/S CALIBRATION ADJUSTMENT (NAV-750/A). This screwdriver adjustment is used to precisely match the 90 Hz modulation level to the 150 Hz modulation level. This control should be moved only for centering adjustments during Calibration Procedures.

Figure 3-2 Controls, Indicators, and Connectors (Sheet 7 of 8)

36A. G/S CALIBRATION ADJUSTMENT (NAV-750B). This screwdriver adjustment on the NAV-750B model test set is located behind the front panel, accessible only when the top panel is removed, and should be moved only for centering adjustments during Calibration Procedures. The G/S Calibration Adjustment is used to precisely match the 90 Hz modulation level to the 150 Hz modulation level.

37. LOC DDM SELECTOR SWITCH AND LOC MODE INDICATOR. The LOC DDM Selector Switch provides precise LOC deviations in 0.046, 0.093, 0.155, and 0.200 DDM increments. Right rotation of this selector switch attenuates the 150 Hz tone which simulates "Aircraft Left on LOC condition" and causes the unit under Test LOC pointer movement to the right. When the LOC DDM Selector Switch is positioned to either the 90 Hz or the 150 Hz detents, only the selected tone is present and the other is off. In the downward position, the Variable DDM control is activated and LOC DDM may be continuously controlled from -0.4 to +0.4 DDM. The LOC Mode Indicator is on when the test set is in the LOC MODE of operation.

38. LOC CALIBRATION ADJUSTMENT (NAV-750/A). This screwdriver adjustment is used to precisely match the 90 Hz modulation level to the 150 Hz modulation level. This control should be moved only for centering adjustments during Calibration Procedures.

38A. LOC CALIBRATION ADJUSTMENT (NAV-750B). This screwdriver adjustment on the NAV-750B model test set is located behind the front panel, accessible only when the top panel is removed, and should be moved only for centering adjustments during Calibration Procedures. The LOC Calibration Adjustment is used to precisely match the 90 Hz modulation level to the 150 Hz modulation level.

Figure 3-2 Controls, Indicators, and Connectors (Sheet 8 of 8)

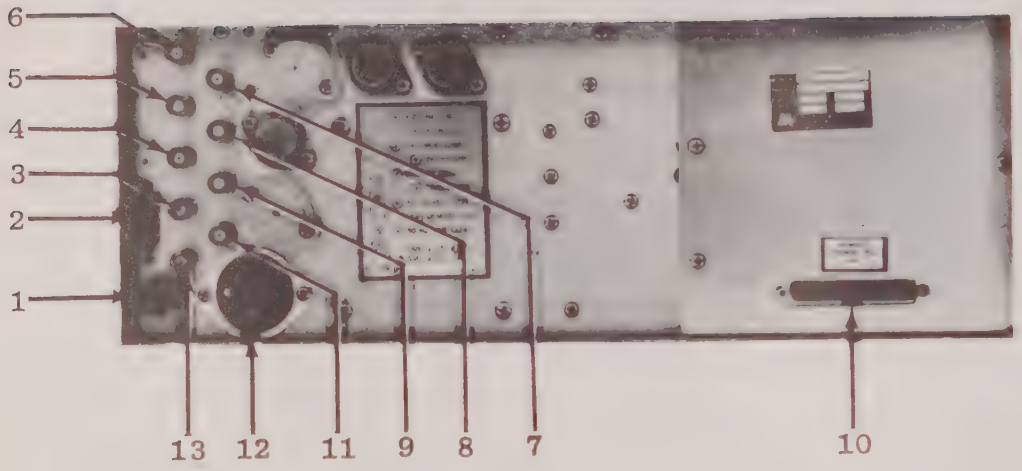

1. AC LINE FUSE. Fuse receptacle for AC power input; 1.0A @ 115 VAC or 0.5A @ 230 VAC.

2. ACCESSORY CONNECTOR (J-10). Various inputs and outputs are available at this connector, such as: remote channeling input, power supply voltages, external modulation input, etc. (See Fig. 3-5 for detailed listing).

3. 30 Hz REFERENCE TONE OUTPUT (J-22). This jack makes the 30 Hz Reference Tone available for external use.

4. 9960 Hz TONE OUTPUT (J-20). This jack makes the 9960 Hz Tone available for external use. (Frequency Modulated at 30 Hz)

5. EXTERNAL MODULATION INPUT (J-18). External audio tones may be applied to this input to add modulation to any signal. (Input Impedance: 1k ohms nominal). NOTE: J-18 must be terminated with 100 ohms, or less, when External Modulation is not in use.

6. 1020 Hz IDENT TONE OUTPUT (J-16) (NAV-750 (A). This jack makes the 1020 Hz Tone available for external use.

7. 90 Hz TONE OUTPUT (J-17). This jack makes the 90 Hz Tone available for external use.

8. 150 Hz TONE OUTPUT (J-19). This jack makes the 150 Hz Tone available for external use.

Figure 3-3 Back Panel Connectors (Sheet 1 of 2)

9. SUM OF TONES OUTPUT (J-21). This jack makes available the sum of all tones for the mode in use. For example, in the VOR mode, the sum of all VOR tones are available at J-21 which can be used for testing VOR receiver accuracy.

10. REMOTE CHANNELING OUTPUT (J-8). This connector provides parallel BCD and ARINC 2 out of 5 code channeling information to remotely control a receiver to track the output frequency of the NAV-750 (See Figure 3-6 for J-8 pin connections).

11. RF DEMOD OUTPUT (J-23). The signal at this jack is the demodulated output signal. The RF signal is demodulated and applied to J-23. This output includes a dc offset of approximately 3.76 volts.

12. AC INPUT CONNECTOR. AC power is applied to this connector. For 230 VAC 50/60 Hz operation, on the primary windings of the power transformer must be rewired.

13. 30 Hz VARIABLE TONE OUTPUT (J-24). This jack makes the 30 Hz Variable Tone available for external use.

14. INTERNAL CONTROLS. All internal controls are provided for calibration only and none are useful for normal test set operation.

ΔF QUIETING MODE

(Effectivity: NAV-750/A S/N 525 & on, NAV-750B S/N 2044 & on)

When making receiver selectivity test with NAV-750 series test set in the ΔF Mode, it is sometimes advantageous to eliminate close-in low-level spurs caused by a beat frequency between the ΔF 10 MHz oscillator and the counter time base 10 MHz oscillator. Circuitry has been added to stop the counter time base oscillator under the following operator controlled conditions:

1. AUTO-MANUAL FREQUENCY CONTROL switch in MANUAL.

2. ΔF control out of detent (and indicator ON)

3. Then, when the MANUAL FREQUENCY STEP switch is pressed, the 10 MHz time base oscillator stops. Since the counter is referenced to the time base oscillator, the display will stop at the count before the STEP switch is pressed. While the STEP switch is pressed, the ΔF control may be used to increase or decrease the offset frequency. Then, when the STEP switch is released, the counter display will indicate the output frequency.

Figure 3-3 Back Panel Connectors (Sheet 2 of 2)

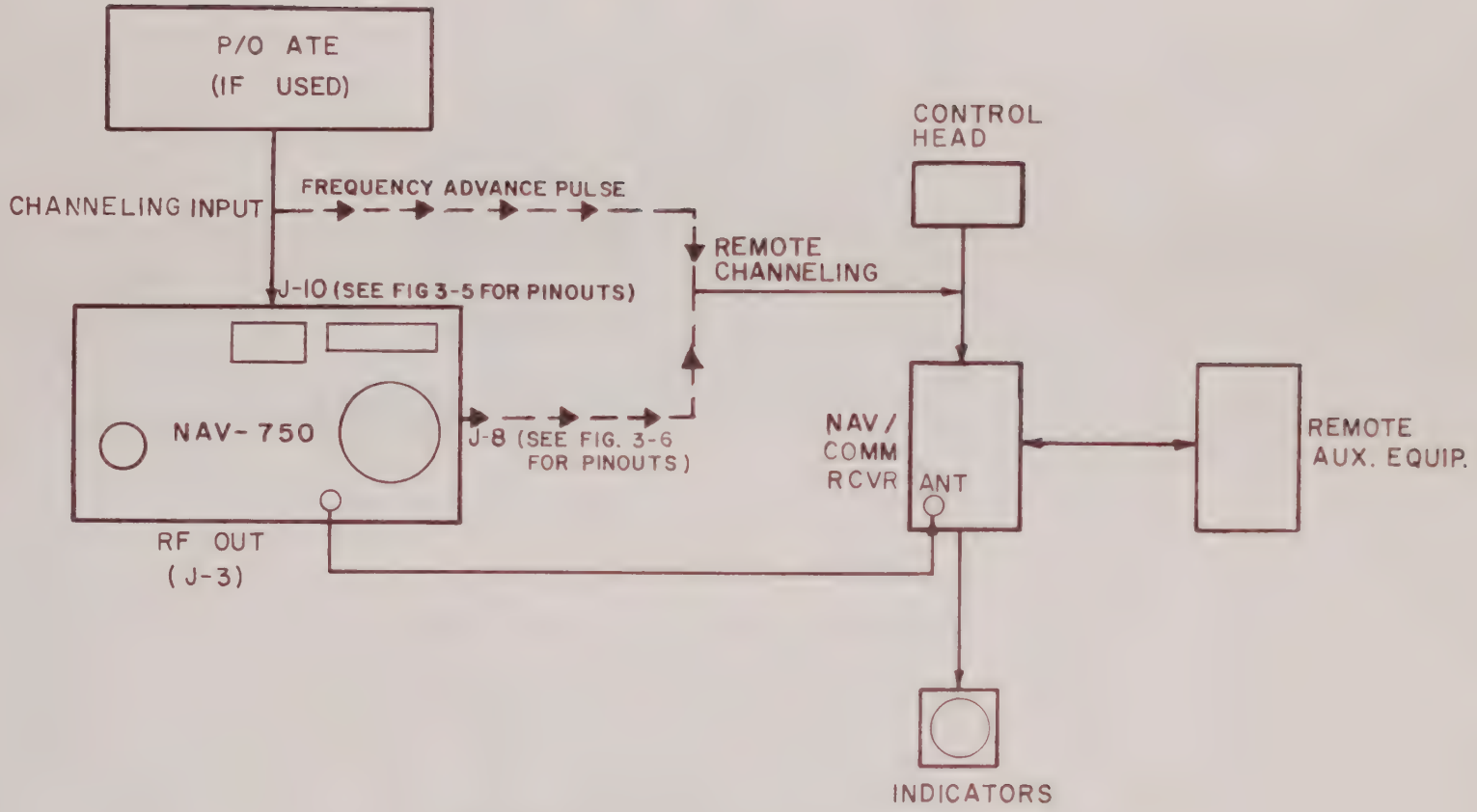

Figure 3-4

CONNECTIONS FOR VOR, LOC,
G/S OR COMM RECEIVER TESTING

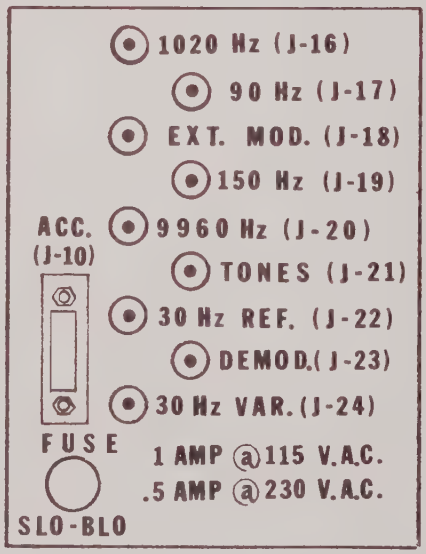

List of Connections for Accessory Connector-J10

Pin	Function
1	+24 Volts Regulated Output
2	+12 Volts Regulated Output
3	+5 Volts Regulated Output
4	Ground
5	-12 Volts Regulated Output
6	Remote Channeling Input
7	Ground
8	Ground for external Clock Select
9	External Bearing Clock Input
10	1020Hz Tone Output
11	External Modulation Input
12	End of Channeling
13	NC
14	NC
15	NC
16	NC

Figure 3-5

DATE	REV	CHANGE	APP'D

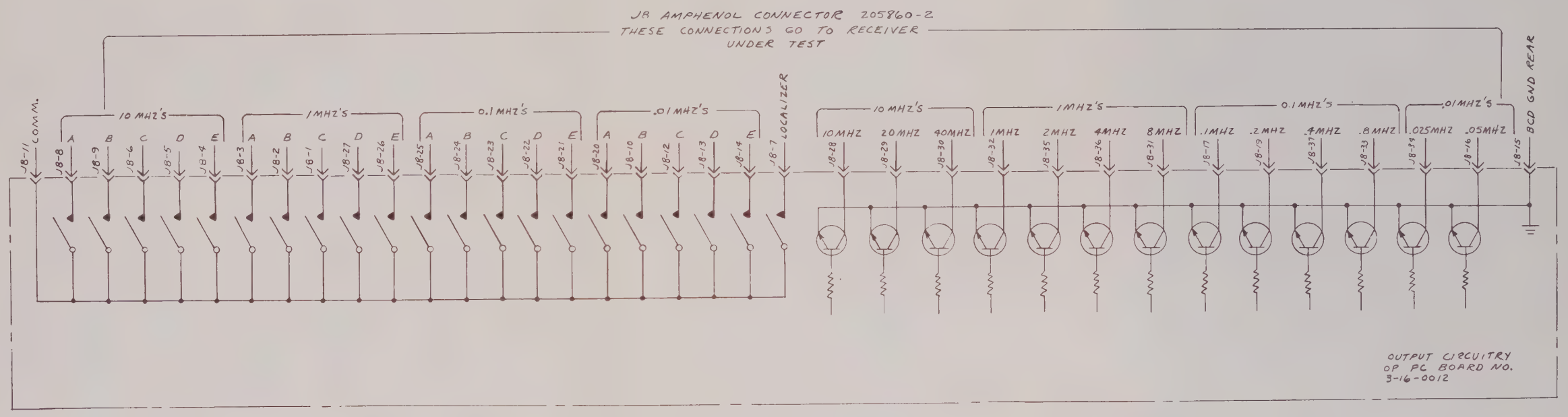

	0	1	2	3	4	5	6	7	8	9
			25			50		75		
A		X	X						X	X
B	X	X		X	X					
C			X	X		X	X			
D					X	X		X	X	
E	X						X	X		X

FREQUENCY SELECTOR TWO-OUT-OF-FIVE BINARY CODE

NEXT ASS'Y	QT'Y	MODEL	ITEM REQ'D	PART NO.	DESCRIPTION
		NAV-750			

APPLICATION — LIST OF MATERIALS

TOLERANCES
UNLESS OTHERWISE SPECIFIED
ALL DIMENSIONS APPLY AFTER FINISH
DECIMALS: ± .008
ANGLES: ± 1/2°
FRACTIONS: ± 1/64 125
SURFACE ROUGHNESS
REMOVE ALL BURRS
MATERIAL
TREATMENT
FINISH

DRAWN JIG 5/9/73
CHECKED
APPROVED

INSTRUMENT FLIGHT RESEARCH CORPORATION
WICHITA, KANSAS

TITLE: EXT. CONNECTION TO REMOTE CHANNELING BD. NAV-750

SIZE C | PART NUMBER 3-16-0068 | REV
SCALE | WEIGHT | SHEET OF

Figure 3-6 3-25/3-26 blank

SECTION III

OPERATING PROCEDURES

3.7 NAV-750 SERIES BENCH TEST SET OPERATING PROCEDURES. The following paragraphs are intended to supplement the user's test procedures relating to specific equipment and demonstrate, to a large degree, the capability of the NAV-750 Series Bench Test Set. It is expected that the user will design and implement procedures and techniques which satisfy equipment and regulatory requirements. Therefore, the test procedures included in this section should not be considered binding or mandatory but should be used as guides for familiarization purposes. It is assumed that the operator is familiar with the controls, indicators, and connectors on the NAV-750. Control settings called out in the procedures are for the Test Set unless otherwise specified. It is also assumed that the Test Set and Unit Under Test (UUT) are turned on and stabilized.

3.7.1 OPERATING MODES AND TONE MODULATIONS. All NAV-750 Test Sets operate in VOR, LOCALIZER, GLIDE SLOPE, AND COMMUNICATION modes. The NAV-750B model includes a MARKER BEACON mode. Each mode in all models is chosen by selecting the appropriate carrier frequency. The Automatic Channeling feature of the NAV-750 allows receiver channeling in 25, 50, 100, or 200 kHz increments. While operating in the LOC mode, the appropriately paired G/S channel may be instantly selected by positioning the LOC-G/S switch to G/S.

3.7.1.1 In the VOR mode, the RF output is automatically modulated (with all modulation level controls in CAL position) with a standard VOR signal consisting of:

Tone	% Modulation
30 Hz Variable	30%
9960 Hz*	30%

* Frequency modulated at a deviation ratio of 16 by the 30 Hz Reference Tone.

3.7.1.2 In the LOC mode, the RF output is automatically modulated (with all modulation level controls in CAL position) with a standard LOC signal consisting of:

Tone	% Modulation
90 Hz	20%
150 Hz	20%

3.7.1.3 In the G/S mode, the RF output is automatically modulated (with all modulation level controls in CAL position) with a standard G/S signal consisting of:

Tone	% Modulation
90 Hz	40%
150 Hz	40%

3.7.1.4 In VOR, LOC, and G/S modes, the 1020 Hz Ident. tone may be added from 0 to 60% modulation by rotating the 1020 Hz Ident. level control clockwise.

3.7.1.5 In the COMM mode, the RF output is automatically modulated (with all modulation level controls in CAL position) with a 1020 Hz Ident signal at 30%.

3.7.1.6 (NAV-750B only) In the Marker Beacon mode, the RF output is modulated at 95% by a Mkr Bcn tone selected by the Meter Function and Tone Selector switch. When this switch is not positioned to a Mkr Bcn tone, the RF output (70 to 79.9 MHz) is automatically modulated with the 1020 Hz tone at 95%.

3.7.1.7 TONES AVAILABLE FOR SPECIAL TESTING. On the rear panel, each of the modulating tones is available for use in specialized receiver section tests. (See Figures 3-3 and 3-5). For example, when operating in the VOR mode, the Sum of Tones Output jack (J21) provides all tones necessary for checking VOR receiver bearing circuits without using the RF portion of the receiver. Individual tones are available at other jacks for similar purposes.

3.7.2 EQUIPMENT CONNECTIONS. Connections to a NAV-COMM receiver are shown in Figure 3-4. Only the antenna lead needs to be connected if remote channeling is not used. For remote channeling pin out connections to connector J-8, refer to Figure 3-6. Figure 3-6 also provides ARINC 2 out 5 code information available at J-8. The relay outputs provide ARINC 2/5 code and the transistors provide the parallel BCD code. A 37 position connector is supplied with the test set for use in constructing a remote channeling cable between J-8 of the NAV-750 and the unit under test. No further reference to equipment connections will be made in the paragraphs that follow. It will be assumed that the correct and necessary connections have been made to the Test Set and the unit under test.

3.7.3 INITIAL TEST SET CONTROL SETTINGS. Set NAV-750 controls and switches to positions listed below:

TO-FROM bearing switch	FROM
METER FUNCTION switch	0-100 or OFF
MASTER MOD level control	.CAL
1020 Hz Ident. Tone Mod level control	.CAL
9960 Hz FM Tone Mod level control	.CAL
30 Hz Tone Mod. level control	.CAL
.01-.05 Degree bearing select switch	..01
LOC DDM selector switch	0
LOC Variable DDM control	0
LOC-G/S Frequency selector switch	.LOC
G/S DDM selector switch	0
G/S Variable DDM control	0
FREQUENCY selector switch	.108.000 MHz
Channeling frequency increment selector switch	25 kHz
AUTO-MANUAL frequency control switch	MANUAL
CHANNELING rate control	.ccw
ΔF control (variable RF control	.ccw
BEARING-FREQ. display select switch	.BEARING
Attenuator control	-120 dBm

3.7.3.1 At initial set-up, and after warm-up, verify NAV-750 Meter Zero and Bearing Error Circuitry as follows:

A) Set BEARING-FREQ selector switch to BEARING.
B) Set Meter Function Switch to ZERO and verify that display is 0°.
C) Press 90° VOR Bearing select pushbutton switch.
D) Adjust BEARING ZERO control to center meter needle.
E) Set TO/FROM switch to the TO position.
F) Set Meter Function Switch to BRG. Meter indication should remain at bearing zero (±0.05°).
G) Set TO/FROM switch to the FROM position. Meter indication should return to bearing zero (±0.05°).
H) Press 270° VOR Bearing select pushbutton switch. Meter indication should return to bearing zero (±0.05°).
I) Set TO/FROM switch to TO position. Meter indication should return to bearing zero (±0.05°).
J) Set Meter Function Switch to ZERO. Meter Indication should remain at Bearing zero. Readjust BEARING ZERO control if necessary.

3.8 VOR RECEIVER TESTS.

3.8.1 The NAV-750 Series Bench Test Set automatically produces a standard VOR test signal, variable in RF level from -120 dBm to -6 dBm (.224μV to 112,000μV into a 50 ohm load), whenever a VOR frequency is selected. The 30 Hz variable tone percentage of modulation may be varied from 0% to 60% with the 30 Hz Tone Modulation Level Control when this control is rotated out of the Cal. detent position. The 9960 Hz Tone (Freq. Modulated with the 30 Hz Ref. Tone) percentage of modulation can be varied in the same manner with the 9960 Hz Tone Modulation Control. The 1020 Hz Ident tone is normally off in VOR and may be added by rotating the 1020 Hz Modulation level control clockwise. The MASTER Modulation control will vary all tone percent modulation levels from 0% to 60% when rotated out of the Cal. detent position. VOR bearings may be selected using the 12 bearing pushbuttons, the + and -10 degree bearing pushbutton switches, or the Variable Bearing control. The generated bearing is displayed when the BEARING-FREQ. select switch is in the BEARING position. The NAV-750 Test Set will be used in subsequent VOR tests to provide the required test signals.

3.8.1.1 VOR Test Signal Definitions are as follows:

A. Standard VOR Test Signal: An RF VOR frequency, amplitude modulated simultaneously at 30% with a 9960 Hz subcarrier which is frequency modulated at a deviation ratio of 16 by 30 Hz Reference phase tone and, a 30 Hz Variable phase tone at 30% which is varied in phase with respect to the Reference phase tone. The RF level of the Standard VOR Test Signal is usually 1000μ Volts.

B. Standard Centering Signal: A Standard VOR Test Signal in which the difference in phase between the Reference and Variable phase 30 Hz tones is equal to the setting of the U.U.T. omni-bearing course selector.

C. Standard Deflection Signal: A Standard VOR Test Signal of 100μ Volts in which the difference in phase between the Reference and Variable phase 30 Hz tones is 10° from that which produces an on-course CDI indication.

3.8.2 VOR RECEIVER SYSTEM BEARING ACCURACY TESTS

DESCRIPTION: Using a Standard VOR Test Signal Generated by the NAV-750, this test determines the bearing accuracy of a VOR receiver system.

SPECIFICATIONS: Bearing accuracy of U.U.T should be within manufacturer's specifications. Check may include RMI indications as necessary.

PROCEDURE:

1. Set controls as follows:

   ATTENUATOR. . . . . 1000μ Volts (-47 dBm)

   FREQUENCY . . . . . 108.00 MHz or any VOR frequency

   All Tone Mod. Level Controls. . . . . CAL

   BEARING-FREQ. switch. . . . . BEARING

   TO-FROM switch. . . . . .FROM

   Meter Function Select Switch. 0-100

2. Press 0° VOR Bearing Select pushbutton.

3. On unit under test (U.U.T.), set omni-bearing selector to 0°.

4. CDI pointer on U.U.T. should be centered and ambiguity indicator should indicate FROM.

   Record CDI pointer error _____

5. Set TO-FROM switch to TO.

6. U.U.T. ambiguity indicator should indicate TO and CDI pointer should be centered.

   Record CDI pointer error _____

7. Repeat steps 2 through 6 for each 30° increment (using VOR Bearing Select pushbuttons) through 360°. (Smaller bearing increments are available using the + and -10° bearing pushbuttons and the Variable BEARING control).

3.8.2.1 VOR RECEIVER BEARING ACCURACY TEST WHILE VARYING 30 Hz VAR. TONE MODULATION ±5%.

DESCRIPTION: The bearing error caused by 30 Hz tone modulation fluctuation is determined in this test. All other VOR signal parameters remain at standard values.

SPECIFICATIONS: Bearing accuracy of U.U.T. should be as required by manufacturer. Check may include RMI indications as necessary.

PROCEDURE:

1. Set controls as follows:

   ATTENUATOR. . . . . 1000μ Volts (-47 dBm)

   FREQUENCY . . . . . 108.00 MHz or any VOR frequency

   All Tone Mod. Level Controls. . . . . CAL

   BEARING-FREQ. Switch. . . . . BEARING

   TO-FROM Switch. . . . . .FROM

   Meter Function Selector Switch. 0-100

2. Press 0° VOR Bearing Select pushbutton.

3. On U.U.T. , set omni-bearing selector to 0°.

4. CDI pointer on U.U.T. should be centered and ambiguity indicator should indicate FROM.

5. Note % modulation meter indication. (approx. 60%) Rotate 30 Hz Tone Modulation Level control clockwise until % modulation is restored to noted value. (approx. 60%).

6. Vary 30 Hz Tone Mod. Level ±5% Mod. by observing the Test signal % Mod. indication for a ±5% Modulation change.

7. Record CDI pointer error resulting from variation of 30 Hz Var. Tone Mod. level _____.

8. Set TO-FROM switch to TO.

9. Repeat step 6.

10. Record CDI pointer error resulting from variation of 30 Hz Var. Tone Mod. level _____.

(cont'd next page)

3.8.2.1 (cont'd)

11. Repeat steps 2 thru 10 for each 30° increment (or as required) through 360°.

12. Return 30 Hz tone Mod. level control to CAL.

3.8.2.1 VOR RECEIVER BEARING ACCURACY TEST WHILE VARYING RF FREQUENCY.

DESCRIPTION: The bearing error caused by carrier signal RF offset is determined in this test. All other signal parameters remain at standard values.

SPECIFICATIONS: As required by U.U.T. manufacturer's specifiations. Check may include RMI indications as necessary.

PROCEDURE:

1. Set controls as follows:

   ATTENUATOR. . . . . 1000μ Volts (-47 dBm)

   FREQUENCY . . . . . 108.00 MHz or any VOR frequency

   All Tone Mod. Level Controls. . . . . CAL

   BEARING-FREQ. Switch. . . . . .FREQ

   TO-FROM Switch. . . . . .FROM

   Meter Function Selector Switch. 0-100

2. Press 0° VOR Bearing Select pushbutton.

3. On U.U.T., set omni-bearing selector to 0°.

4. CDI pointer on U.U.T. should be centered and ambiguity indicator should indicate FROM.

5. Vary the ΔF control to offset carrier frequency between limits specified by the manufacturer and record resulting CDI pointer error. _____.

6. Set TO-FROM switch to TO.

7. Repeat step 5 and record resulting CDI pointer error. _____.

(cont'd next page)

3.8.2.1 (cont'd)

8. Repeat step 2 through 7 for each 30° increment (or as required) through 360°.

9. Return ΔF control to CAL.

3.8.2.3 VOR RECEIVER ACCURACY TEST WHILE VARYING THE RF SIGNAL LEVEL.

DESCRIPTION: The bearing error caused by RF signal level fluctuation is determined in this test. All other signal parameters remain at standard values.

SPECIFICATIONS: As required by U.U.T. manufacturer's specifications. Check may include RMI indications as necessary.

PROCEDURE:

1. Set controls as follows:

   ATTENUATOR. . . . . 1000μ Volts (-47 dBm)

   FREQUENCY . . . . . 108.00 MHz or any VOR Frequency

   All Tone Mod. Level Controls. . . . . CAL

   BEARING-FREQ Switch . . . . . BEARING

   TO-FROM Switch. . . . . .FROM

   Meter Function Selector Switch. 0-100

2. Press 0° VOR Bearing Select pushbutton.

3. On U.U.T., set omni-bearing selector to 0°.

4. CDI pointer on U.U.T. should be centered and ambiguity indicator should indicate FROM.

5. Vary ATTENUATOR from 10μ Volts (-87 dBm) to 20,000μ Volts (-21 dBm) and record resulting CDI pointer error._____

6. Set TO-FROM switch to TO.

7. Repeat step 5 and record resulting CDI pointer error._____

8. Repeat steps 2 through 7 for each 30° increment (or as required) through 360°.

3.8.2.4 Additional checks can be made which may cause variation in Bearing Accuracy of a VOR receiver such as:

A. Environmental Conditions.
B. Power input voltage variations.
C. Power Supply frequency variations.

NOTE: Tones may be injected via the Ext. Mod. input on the rear panel for tests which may require a variable tone frequency.

3.8.3 VOR COURSE DEVIATION INDICATOR (CDI) TESTS.

DESCRIPTION: The tests in this paragraph use Standard VOR Test signals to check CDI pointer deflection sensitivity, response and linearity characteristics. Additional equipment required is a stop watch for response time measurement and a means of determining CDI pointer deflection amount, such as a small ruler.

PROCEDURE:

CDI POINTER DEFLECTION SENSITIVITY TEST.

1. Set controls as follows:

ATTENUATOR. . . . . .100µ Volts (-67 dBm)

FREQUENCY . . . . . 108.00 MHz or any VOR Frequency

All Tone Mod. Level Controls. . . . . CAL

BEARING-FREQ. Switch. . . . . BEARING

TO-FROM Switch. . . . . .FROM

Meter Function Selector Switch. 0-100

2. Press 0° VOR Bearing select pushbutton.

3. Select 0° on U.U.T. omni-bearing selector.

4. Use Variable Bearing control to obtain on-course (FROM) indication on U.U.T. CDI. (CDI pointer exactly centered).

5. Increase Test Signal Bearing 10° by pressing the +10° Bearing pushbutton switch once and verify that DISPLAY indicates a 10° Bearing increase.

(cont'd next page)

3.8.3 (Cont'd)

6. Measure the amount of CDI pointer deflection. _____

7. Vary the ATTENUATOR from 10μ Volts (-87 dBm) to 20,000μ Volts (-21 dBm) and record any CDI pointer variation.

_____

8. Decrease Test Signal Bearing to -10 from on-course by pressing -10° pushbutton 2 times. Verify that DISPLAY indicates a -20° change.

9. Measure the amount of CDI pointer deflection. _____

10. Repeat step 7 and record any CDI pointer variation.

_____

11. Compare results of step 6, 7, 9, and 10 with U.U.T. manufacturer's specifications.

CDI POINTER RESPONSE TIME TEST

12. Set ATTENUATOR to 100μ Volts (-67 dBm).

13. Press +10° VOR Bearing Select pushbutton to obtain an on-course CDI indication.

14. Press +10° Bearing pushbutton and determine with a stopwatch the time required for the CDI pointer to deflect 70% of its maximum deflection.

_____

15. Repeat Step 14 for -10° from on-course. _____

16. Compare results of steps 14 and 15 with manufacturer's specifications.

CDI POINTER LINEARITY TEST.

17. Press 0° VOR Bearing Select pushbutton and adjust Variable Bearing Control to obtain on-course (FROM) indication on U.U.T. CDI.

18. Increase VOR Test Signal Bearing in 2° increments up to 10° by rotating Variable Bearing control clockwise. Measure the CDI pointer 2° increments. Increments should be equal. _____(✓)

19. Repeat step 18 in -2° increments up to -10°. Measure CDI pointer 2° increments. _____(✓)

(cont'd next page)

3.8.3 (cont'd)

20. Press 0° VOR Bearing Select pushbutton.

3.8.3.1 CDI AMBIGUITY (TO-FROM) INDICATION TEST.

DESCRIPTION: Using a Standard VOR Signal, this test checks operation of the ambiguity indicator by varying the test signal bearing ±60 from on-course indication.

SPECIFICATION: The "TO-FROM" indicator will indicate a clear and appropriate "TO" or "FROM" indication as test signal bearing is changed ±60°.

PROCEDURE:

1. Set controls as follows:

   ATTENUATOR. . . . . 1000μ Volts (-47 dBm)

   FREQUENCY . . . . . 108.00 MHz or any VOR Frequency

   All Tone Mod. Level Controls. . . . . CAL

   BEARING-FREQ. Switch. . . . . BEARING

   Meter Function Selector Switch. 0-100

   TO-FROM Switch. . . . . .FROM

2. Select a test signal on NAV-750 that results in an on-course "FROM" CDI indication on U.U.T. CDI.

3. Using the Variable Bearing control, change the Test Signal Bearing +60° and -60° from on-course. TO-FROM indication should remain a clear "FROM". _____

4. Set TO-FROM switch to TO and repeat step 3. TO-FROM indication should remain a clear "TO". _____

5. Repeat 2, 3, and 4 at various ATTENUATOR settings between 10μ Volts (-87 dBm) and 20,000μ Volts (-21 dBm).

3.8.3.2 CDI ALARM SIGNAL TEST (WARNING FLAG)

DESCRIPTION: This test checks the operation of the alarm system under various signal conditions.

(cont'd next page)

3.8.3.2 (cont'd)

SPECIFICATIONS: Alarm should appear when VOR signal is unreliable or missing in whole or in part but should be "out of sight" or OFF when VOR signal is reliable.

PROCEDURE:

1. Set controls as follows:

   ATTENUATOR. . . . . .100µ Volts (-67 dBm)

   FREQUENCY . . . . . 108.00 MHz or any VOR Frequency

   All Tone Mod. Level Controls. . . . . CAL

   BEARING-FREQ. Switch. . . . . BEARING

   TO-FROM Switch. . . . . .FROM

   Meter Function Selector Switch. 0-100

NORMAL SIGNAL

2. Verify that U.U.T. Alarm Signal (Warning Flag) is out of sight or OFF.

_____(✓)

NORMAL SIGNAL, FLUCTUATING RF

3. Vary ATTENUATOR from 10µ Volts (-87 dBm) to 20,000µ Volts (-21 dBm) and verify that Alarm Signal (Warning Flag) is OFF or out of sight.

_____(✓)

SIGNAL ABSENT

4. Set ATTENUATOR to -112 dBm and disconnect RF output connector from U.U.T.. Verify that Alarm Signal or Warning Flag is visible.

_____(✓)

MISSING 9960 Hz TONE

5. Reconnect RF connector to U.U.T. and set ATTENUATOR to 100µ Volts (-67 dBm). Alarm Signal should be OFF or Warning Flag should be out of sight.

_____(✓)

6. Set 9960 Hz Tone Mod. Level control to UNCAL 0 (full ccw & out of detent). Alarm Signal or Warning Flag should be visible.

_____(✓)

(cont'd next page)

3.8.3.2 (cont'd)

7. Vary ATTENUATOR from 10μ Volts (-87 dBm) to 20,000μ Volts (-21 dBm). Alarm Signal or Warning Flag should remain visible.

_____(✓)

MISSING 30 Hz TONE

8. Return 9960 Hz Tone control to CAL position.

9. Set 30 Hz Tone Mod. Level control to UNCAL 0 (full ccw & out of detent). Alarm Signal or Warning Flag should be visible.

_____(✓)

10. Vary ATTENUATOR from 10μ Volts (-87 dBm) to 20,000μ Volts (-21 dBm). Alarm Signal or Warning Flag should remain visible.

_____(✓)

MARGINAL SIGNAL STRENGTH

11. Return 30 Hz Tone control to CAL position.

12. Set ATTENUATOR to 100μ Volts (-67 dBm).

13. Set omni-bearing selector of U.U.T. to 0° FROM.

14. Press 0° VOR Bearing Selector pushbutton. If necessary, use Variable Bearing control to center CDI pointer.

15. Press +10° VOR Bearing Selector pushbutton. Verify that CDI pointer is deflected for 10° course deviation.

_____(✓)

16. Decrease ATTENUATOR setting to obtain 50% of CDI pointer deflection noted in step 15. The Warning Flag of U.U.T. should just begin to appear or "enter" the alarm condition.

_____(✓)

17. NOTE: The μ Volt indication on the ATTENUATOR dial in Step 17 is the receiver sensitivity in μ Volts.

3.8.4 VOR RECEIVER SENSITIVITY TEST

DESCRIPTION: This test determines the VOR receiver sensitivity in μ Volts. Receiver sensitivity is the minimum RF level in μ Volts of a standard VOR Test Signal required to produce 50% of Standard Deflection of the CDI pointer. (Standard Deflection is produced by a Standard VOR signal at 100μ Volts with the 30 Hz Var. Tone shifted 10° in phase from the selected U.U.T. omni-bearing selector setting.)

SPECIFICATIONS: As stipulated in the manufacturer's specifications.

PROCEDURE:

1. Set controls as follows:

   ATTENUATOR. . . . . .100μ Volts (-67 dBm)

   FREQUENCY . . . . . 108.00 MHz or any VOR frequency

   All Tone Mod. Level Controls. . . . . CAL

   BEARING-FREQ. Switch. . . . . BEARING

   TO-FROM Switch. . . . . .FROM

   Meter Function Selector Switch. 0-100

2. Using bearing select switches and/or Variable Bearing control, adjust test signal bearing to produce an on-course (FROM) indication on U.U.T. CDI.

3. Press + or - 10° bearing select pushbutton to obtain Standard Deflection signal. Verify that Bearing Display has changed 10° and U.U.T. CDI pointer is deflected appropriately (Standard Deflection).

4. Adjust ATTENUATOR to decrease signal strength until deflection of CDI pointer is 50% of Standard Deflection.

5. From ATTENUATOR dial and Correspondence Chart (Table 3-1), determine receiver sensitivity in μ Volts. _____

6. Repeat steps 4 and 5 as necessary for each VOR channel. (This procedure may be combined with the Automatic Channeling test to accelerate individual channel Receiver Sensitivity checks).

3.9 AUTOMATIC FREQUENCY CHANNELING TEST

3.9.1 A VHF NAV-COMM receiver can be automatically channeled, up in frequency only, by the NAV-750 Bench Test Set. The frequency increment is selected with the CHANNELING Frequency Increment selector switch (25, 50, 100, and 200 kHz) according to NAV-COMM receiver channel spacing. By placing the AUTO-MANUAL Frequency control switch in the AUTO position and rotating the CHANNELING rate control clockwise, the operator can select a convenient channeling rate from 0 to a maximum of about 4 advances per second. An audio tone announces each incremental advance and the display will indicate the RF output frequency if the BEARING-FREQ switch is positioned to FREQ. In the interest of saving time, this procedure may be combined with another, such as the Receiver Sensitivity Test. It is a simple matter to set the controls on one channel for minimum requirements and then use AUTO-CHANNELING while checking each channel for specific minimums.

3.9.2 NAV-COMM AUTO-CHANNELING TEST

DESCRIPTION: This test checks the channeling capability of the U.U.T..

NOTE

The NAV-750 AUTO-CHANNELING system is designed to stop automatically at 117.950, 135.975, and 157.950 MHz. To continue channeling when stopped at 117.950 and 135.975 MHz, place the AUTO-MANUAL selector switch to MANUAL and select the frequency of the next channel manually on the FREQUENCY selector switches. Then, when the AUTO-MANUAL switch is returned to AUTO, channeling will continue from the manually selected frequency.

PROCEDURE:

1. Set controls as follows:

FREQUENCY	To lowest VOR, LOC, or COMM. frequency to match U.U.T. starting frequency
ATTENUATOR	As required

(cont'd next page)

3.9.2 (cont'd)

Tone Mod. Level Controls . . . . . As required or CAL

BEARING-FREQ. Switch . . . . . .FREQ.

TO-FROM. . . . . As required

Meter Function Selector Switch 0-100

2. Rotate CHANNELING control to full counterclockwise.

3. Set AUTO-MANUAL frequency selector switch to AUTO.

4. Rotate CHANNELING control clockwise to set desired channeling rate.

5. Observe that output of U.U.T. is appropriate for input signal from test at each channel.

_____(✓)

6. Channeling can be stopped at any time by rotating CHANNELING control to full counterclockwise position.

7. At completion of test, rotate CHANNEL control to full counterclockwise position and place AUTO-MANUAL switch to MANUAL.

3.10 ILS LOCALIZER RECEIVER TESTS

3.10.1 In the LOC mode when LOC mode indicator is ON, the NAV-750 Series Bench Test Set produces a variable RF output signal from -120 dBm to -6 dBm in the 108.0 to 112 MHz band. The RF is modulated simultaneously with 90 Hz and 150 Hz tones at 20% each. Specific depth of modulation relationships between these tone is available with the LOC DDM selector switch. Continuously variably DDM control is available with the DDM control below the DDM selector switch. Right rotation of the LOC DDM switch or control will result in right deflection of the CDI pointer and left deflection with left control or switch rotation.

3.10.1.2 LOC Test Signal Definitions are as follows:

A. Standard Localizer Test Signal: An RF carrier amplitude modulated simultaneously with 90 and 150 Hz tones so that the sum of their separate modulation percentages equals 40±2%.

(cont'd next page)

3.10.1.2 (cont'd)

B. Standard Localizer Centering Signal: A Standard Localizer Test Signal in which the difference in depth of modulation (DDM) of the 90 and 150 Hz tones is less than 0.002 (0.1 dB) and CDI pointer is centered.

C. Standard Localizer Deviation Signal: A Standard Localizer Test Signal in which the difference in depth of modulation (DDM) of the 90 and 150 Hz tones is 0.093 (4 dB). In the case of indicators in which the deflection from center to full scale is linear, standard deflection of the CDI pointer is 60% (90 μ Amps) of full scale deflection.

3.10.1.3 Difference in Depth of Modulation (DDM) Definition: Difference in depth of modulation is the percentage modulation depth of the larger tone (90 or 150 Hz) minus the percentage modulation depth of the smaller tone divided by 100.

3.10.1.4 In the LOC mode, the 1020 Hz Ident. tone is not added automatically and, when required, must be added from 0 to 60% modulation by rotating the 1020 Hz modulation level control clockwise.

3.10.2 LOC CENTERING ACCURACY TEST

DESCRIPTION: This test checks the centering accuracy of the U.U.T. under the following signal conditions:

A. Standard Centering Signal.

B. Standard Centering Signal with carrier level variation.

C. Standard Centering Signal with carrier frequency variation.

D. Standard Centering Signal with simultaneous variation of 90 and 150 Hz Tone Modulation Percentages.

E. Standard centering signal with variation of 90 and 150 Hz TONE PHASE RELATIONSHIP with Ident. Tone Added.

(cont'd next page)

3.10.2 (cont'd)

SPECIFICATIONS: U.U.T. centering error limits shall be as specified in manufacturer's specifications. (Centering error is usually expressed in percentage of standard deflection).

PROCEDURE:

1. Set controls as follows for Standard Centering Signal Conditions:

   ATTENUATOR. . . . . 1000μ Volts (-47 dBm)

   FREQUENCY . . . . . .108.100 MHz or any LOC Frequency

   BEARING-FREQ Selector Switch. . . . . .FREQ

   LOC-G/S Switch. . . . . LOC

   LOC DDM Selector Switch 0

   G/S DDM Selector Switch 0

   Meter Function Selector Switch. 0-100

   All Tone Mod. Level Controls. . . . . CAL

2. If required, substitute a high accuracy (±1%) deviation meter for the LOC deviation pointer.

STANDARD LOC CENTERING SIGNAL

3. CDI LOC deviation pointer should be centered. Record centering error in μ Amps or pointer deflection.

_____(✓)

CARRIER LEVEL VARIATION

4. Vary the signal carrier level from 50μ Volts (-73 dBm) to 10,000μ Volts (-27 dBm) with the ATTENUATOR.

5. Record centering error due to carrier level variation in μ Amps or pointer deflection.

_____(✓)

CARRIER FREQUENCY VARIATION

6. Set ATTENUATOR to 1000μ Volts (-47 dBm).

7. Using the ΔF control, vary the carrier frequency ±9 kHz and note CDI pointer variation.

(cont'd next page)

3.10.2 (cont'd)

8. Record maximum centering error due to carrier frequency variation in μ Amps or pointer deflection.

9. Repeat steps 7 and 8 for each LOC frequency.

10. Return ΔF control to CAL position.

SIMULTANEOUS VARIATION OF 90 AND 150 Hz TONE MODULATION PERCENTAGES.

11. Note panel meter normal modulation indication. Using the MASTER MOD control, vary the total modulation level 4% Mod. above and below normal modulation level.

12. Record centering error due to modulation variation in μ Amps or pointer deflection.

VARIATION OF 90 AND 150 Hz TONE PHASE RELATIONSHIP (±12° of COMMON 30 Hz SUBHARMONIC) With Ident. Tone Added.

13. Add 30% 1020 Hz tone modulation as follows:

    A. Set G/S DDM switch to 150 Hz.

    B. Set LOC DDM switch to 90 Hz.

    C. Note that Mod. meter now indicates 0% modulation.

    D. Rotate 1020 Hz tone Mod. control clockwise until meter indicates 30% modulation.

    E. Return G/S and LOC DDM switches to 0.

14. Set BEARING-FREQ. switch to BEARING.

15. Press 0° VOR Bearing select pushbutton and verify that display is 0.00°.

16. Rotate variable BEARING control clockwise until display is 12.00°.

17. Press Ø pushbutton. Note centering error and release Ø pushbutton.

18. Record centering error, due to tone phase shift, in pointer deflection or μ Amps.

(cont'd next page)

3.10.2 (cont'd)

19. Rotate Variable BEARING control counterclockwise until display is 348.00°.

20. Press Ø pushbutton. Note centering error and release Ø pushbutton.

21. Record centering error, due to tone phase shift, in pointer deflection or μ Amps.

22. Return 1020 Hz tone control to CAL position.

23. Press 0° VOR Bearing select pushbutton.

24. Additional LOC Centering Accuracy Tests may be performed which may cause LOC centering errors, such as:

    A. Environmental conditions.

    B. Power input voltage variations.

    C. Power supply frequency variations.

3.10.3 LOC CDI DEFLECTION AGC CHARACTERISTICS and DEFLECTION BALANCE TEST

DESCRIPTION: This test determines the effect of RF input variation on Standard Deviation signal indication.

SPECIFICATION: Deflection caused by RF level variation from 50 to 10,000μ Volts should not be more than ±20% of Standard Deflection.

PROCEDURE:

1. Set controls as follows:

   FREQUENCY. . . . . 108.100 MHz or any LOC frequency

   ATTENUATOR . . . . . .1000μ Volts (-47 dBm)

   G/S DDM Selector Switch. 0

   LOC DDM Selector Switch. 0

   LOC-G/S Switch . . . . . .LOC

(cont'd next page)

3.10.3 (cont'd)

Meter Function Selector Switch. 0-100

All Tone Mod. Level Controls. . . . . .CAL

2. If required, substitute a high accuracy (±1%) deviation meter for the LOC deviation pointer.

3. Set LOC DDM selector switch to Left 0.155 DDM. Verify CDI pointer deflection to be left full scale (150μ Amps).

_____(✓)

4. Repeat step 3 for Right 0.155 DDM and verify that deflection amount is equal to step 3.

_____(✓)

5. Set LOC DDM selector switch to 0 and verify that U.U.T. CDI pointer is centered.

6. Set LOC DDM selector switch to Left 0.093 DDM.

7. U.U.T. CDI pointer should position to Left Standard Deflection (60% of full scale and 90μ Amps).

_____(✓)

8. Vary ATTENUATOR from 50μ Volts (-73 dBm) to 10,000μ Volts (-27 dBm) and note CDI pointer variation.

9. Record effect of RF level variation on CDI pointer deflection in μ Amps or % of Standard Deflection.

_____(✓)

10. Repeat steps 7 through 10 for Right 0.093 DDM.

11. Return LOC DDM Selector switch to 0.

3.10.4 LOC RF SENSITIVITY TEST

DESCRIPTION: This test determines the LOC RF sensitivity in μ Volts. RF sensitivity is the minimum RF signal input level required of a Standard Localizer Deviation Signal to produce at least 60% of Standard Deflection. This test should be made on each available channel.

SPECIFICATION: RF Sensitivity should be 30μ Volts, or better.

(cont'd next page)

3.10.4 (Cont'd)

PROCEDURE:

1. Set controls as follows:

   ATTENUATOR. . . . . 1000μ Volts (-47 dBm)

   FREQUENCY . . . . . 108.10 MHz or any LOC frequency

   All Tone Mod. Level Controls. . . . . CAL

   LOC-G/S Switch. . . . . LOC

   BEARING-FREQ Switch . . . . . .FREQ

   Meter Function Selector Switch. 0-100

   G/S DDM Selector Switch 0

   LOC DDM Selector Switch 0

2. Verify that U.U.T. CDI pointer is centered.

3. Set LOC DDM selector switch to Left (or Right) 0.093 DDM and verify that U.U.T. CDI pointer is deflected 60% of full scale (90μ Amps).

   _____(✓)

4. Reduce RF input signal level with ATTENUATOR until U.U.T. CDI pointer deflection is 60% of Standard Deflection (result of step 3).

5. From ATTENUATOR dial and correspondence chart (Table 3-1), determine LOC RF sensitivity.

   _____μ Volts

6. Repeat steps 4 and 5 for each LOC channel.

3.10.5 LOC WARNING SIGNAL TEST

DESCRIPTION: This test checks the operation of the alarm system under various signal conditions.

SPECIFICATIONS: Alarm should appear when LOC signal is unreliable or missing in whole or in part but should be "out of sight" or OFF when LOC signal is reliable.

PROCEDURE:

1. Set controls as follows:

ATTENUATOR. . . . . .100µ Volts (-67 dBm)

FREQUENCY . . . . . 108.10 MHz or any LOC frequency

All Tone Mod. Level Controls. . . . . CAL

BEARING-FREQ. switch. . . . . FREQ.

LOC-G/S Switch. . . . . LOC

Meter Function Selector Switch. 0-100

G/S DDM Selector Switch 0

LOC DDM Selector Switch 0

NORMAL SIGNAL

2. Verify that U.U.T. Alarm Signal is OFF or (Warning Flag) out of sight.

_____(✓)

NORMAL SIGNAL, FLUCTUATING RF

3. Vary ATTENUATOR from 30µ Volts (-77 dBm) to 10,000µ Volts (-27 dBm) and verify that Alarm Signal is OFF or (Warning Flag) out of sight.

_____(✓)

RF SIGNAL ABSENT

4. Set ATTENUATOR to -112 dBm and disconnect RF output connector from U.U.T.. Verify that Alarm Signal or Warning Flag is visible.

_____(✓)

MISSING 90 or 150 Hz TONES

5. Reconnect RF connector to U.U.T. and set ATTENUATOR to 100µ Volts (-67 dBm). Verify that Alarm Signal is OFF or Warning Flag is out of sight.

(cont'd next page)

3.10.5 (cont'd)

6. Set G/S DDM selector switch to 150 Hz. Alarm Signal or Warning Flag should be visible.

_____(✓)

7. Set G/S DDM selector switch to 90 Hz. Alarm Signal or Warning Flag should be visible.

_____(✓)

MISSING 90 AND 150 Hz TONES

8. Set LOC DDM selector switch to 150 Hz and verify that G/S DDM selector switch is set to 90 Hz. Alarm Signal or Warning Flag should be visible.

_____(✓)

MARGINAL LOC SIGNAL STRENGTH (STANDARD LOC DEVIATION SIGNAL PRODUCING 50% OF STANDARD DEFLECTION)

9. Set controls as follows to produce standard LOC Deviation Signal:

ATTENUATOR. . . . . 1000μ Volts (-47 dBm)

All Tone Mod. Controls. . . . . CAL

LOC-G/S Switch. . . . . LOC

G/S DDM Switch. 0

LOC DDM Switch. . . . . (Left or Right) 0.093 DDM

10. Verify that U.U.T. CDI pointer is at standard deflection (60% of full scale).

11. Reduce RF signal level with ATTENUATOR until U.U.T. CDI pointer is deflected 50% of standard deflection. Alarm Signal or Warning Flag should be visible.

_____(✓)

3.10.6 ILS LOC COURSE DEVIATION INDICATION.

DESCRIPTION: This test checks the U.U.T. CDI pointer deflection with precise DDM tone inputs. (A precision meter (±1%) may be substituted for the U.U.T. CDI LOC pointer movement to check receiver circuitry or deflection current).

SPECIFICATIONS: As stipulated in the U.U.T. manufacturer's specifications.

(cont'd next page)

3.10.6 (cont'd)

PROCEDURE:

1. Set controls as follows for Standard Centering Signal:

   FREQUENCY. . . . . .108.10 MHz or any LOC frequency

   ATTENUATOR . . . . . .1000µ Volts (-47 dBm)

   All Tone Mod. Controls . . . . . .CAL

   LOC-G/S Switch . . . . . .LOC

   G/S DDM Switch 0

   LOC DDM Switch 0

   BEARING-FREQ. Switch . . . . . .FREQ.

2. Verify that U.U.T. CDI LOC pointer is centered.

CDI LOC DEFLECTION RESPONSE AT 0.155 DDM.

3. Set LOC DDM selector switch to Left 0.155 DDM. U.U.T. CDI pointer should reach 67% of full scale deflection within 2 seconds and then stop at full scale (150µ Amps). (Pointer overshoot should not exceed 5% of full scale deflection).

   _____(✓)

4. Set LOC DDM selector switch to Right 0.155 DDM. U.U.T. CDI pointer should reach 67% of full scale deflection within 2 seconds and then stop at full scale (150µ Amps). (Pointer overshoot should not exceed 5% of full scale deflection).

   _____(✓)

CDI LOC DEFLECTION AT 0.200 DDM

5. Set LOC DDM selector switch to Right 0.200 DDM and check that pointer deflection does not decrease from full scale.

   _____(✓)

6. Set LOC DDM selector switch to Left 0.200 DDM and check that pointer deflection does not decrease from full scale.

   _____(✓)

(cont'd next page)

3.10.6 (cont'd)

CDI LOC DEFLECTION AT 0.093 DDM

7. Set LOC DDM selector switch to Left 0.093 DDM and check that pointer deflection is Left Standard (90μ Amps).

_____(✓)

8. Set LOC DDM selector switch to Right 0.093 DDM and check that pointer deflection is Right Standard (90μ Amps).

_____(✓)

CDI LOC DEFLECTION AT 0.046 DDM

9. Set LOC DDM selector switch to Right 0.046 DDM and check that pointer deflection is Right Half Standard (45μ Amps).

_____(✓)

10. Set LOC DDM selector switch to Left 0.046 DDM and check that pointer deflection is Left Half Standard (45μ Amps).

_____(✓)

11. Return LOC DDM selector switch to 0. CDI pointer should be centered (0μ Amps).

_____(✓)

3.10.7 Other conditions which may be used in the foregoing tests are as follows:

A. Environmental Conditions.

B. Power Input Variations.

C. Power Supply Frequency Variations.

NOTE: Tones may be injected via the ext. Mod. input on the rear panel for tests which require special tone quality or frequency. Outputs of all tones are also available at the rear panel for specialized tests.

3.11 ILS GLIDE SLOPE SYSTEM TESTS.

3.11.1 The NAV-750 Bench Test Set automatically provides a standard Glide Slope signal, variable in RF level from -120 dBm to -6 dBm (in the 330 MHz band) (.224 to 112,000μ Volts into a 50 ohm load), whenever a G/S frequency is selected. The G/S frequency may be selected with either the FREQUENCY selector switches or by placing the LOC-G/S switch to G/S. When operating in the LOC mode, this switch automatically provides the paired G/S frequency for the selected LOC channel. As in the LOC mode, the RF is modulated with 90 Hz and 150 Hz tones. Tone Modulation is at 40% for each tone. Specific depth of modulation relationships between these tones is available with G/S DDM left and right switch positions which correspond to down and up U.U.T. CDI G/S pointer deflections.

3.11.1.2 G/S Test Signal Definitions are as follows:

A. Standard G/S Test Signal: An RF signal carrier amplitude modulated simultaneously with 90 and 150 Hz tones each modulated at 40%.

B. Standard Glide Slope Centering Signal. A Standard G/S Test Signal in which the depth of modulation of the 90 Hz and 150 Hz tones is equal (less than 0.002 DDM).

C. Standard Glide Slope Deviation Signal. A Standard G/S signal Test Signal in which the difference in depth of modulation of the 90 Hz and 150 Hz tones is 0.091 DDM.

3.11.1.3 Difference in Depth of Modulation (DDM) definition: Difference in Depth of Modulation (DDM) is the percentage modulation depth of the larger tone (90 or 150 Hz) minus the percentage modulation depth of the smaller tone, divided by 100.

3.11.1.4 In the G/S mode, the 1020 Hz Ident. tone is not added automatically but may be added from 0 to 60% modulation by rotating the 1020 Hz modulation level control clockwise.

3.11.2 G/S CENTERING ACCURACY TEST

DESCRIPTION: This test check the centering accuracy of the U.U.T. under the following signal conditions:

A. Standard G/S Centering Signal.

B. Standard Centering Signal with Carrier Level Variation.

C. Standard Centering Signal with Carrier Frequency Variation.

D. Standard Centering Signal with Simultaneous Variation of 90 and 150 Hz Tone Modulation Percentages.

E. Standard Centering Signal with Variation of 90 and 150 Hz Tone Phase Relationship with Ident. Tone added.

SPECIFICATIONS: U.U.T. centering error limits shall be as specified in manufacturer's specifications. (Centering error is usually expressed in percentage of Standard Deflection.

PROCEDURE:

1. Set controls as follows:

ATTENUATOR. . . . . .700µ Volts (-50 dBm)

FREQUENCY . . . . . .108.10 MHz (LOC Frequency)

BEARING-FREQ Selector Switch. . . . . FREQ.

LOC DDM Selector Switch 0

G/S DDM Selector Switch 0

Meter Function Selector Switch. 0-100

All Tone Mod. Level Controls. . . . . CAL

LOC-G/S Switch. . . . . G/S

(Display should indicate paired G/S frequency of 334.70 MHz for LOC frequency of 108.10 MHz)

(cont'd next page)

3.11.2 (cont'd)

2. Selection of G/S frequencies can be performed one of two ways:

   A. Select a LOC frequency on FREQUENCY switches and obtain its paired G/S frequency by positioning the LOC-G/S switch to G/S. Display will be the RF output.

   B. Select G/S frequency directly using the FREQUENCY switches.

   C. NOTE: This procedure suggests using method A.

   D. A listing of LOC and G/S paired frequency is listed for convenient reference:

LOC	G/S	LOC	G/S
108.10	334.70	110.10	334.40
108.15	334.55	110.15	334.25
108.30	334.10	110.30	335.00
108.35	333.95	110.35	334.85
108.50	329.90	110.50	329.60
108.55	329.75	110.55	329.45
108.70	330.50	110.70	330.20
108.75	330.35	110.75	330.05
108.90	329.30	110.90	330.80
108.95	329.15	110.95	330.65
109.10	331.40	111.10	331.70
109.15	331.25	111.15	331.55
109.30	332.00	111.30	332.30
109.35	331.85	111.35	332.15
109.50	332.60	111.50	332.90
109.55	332.45	111.55	332.75
109.70	333.20	111.70	333.50
109.75	333.05	111.75	333.35
109.90	333.80	111.90	331.10
109.95	333.65	111.95	330.90

3. If required, substitute a high accuracy (±1%) deviation meter for the G/S deviation pointer.

(cont'd next page)

3.11.2 (cont'd)

STANDARD G/S CENTERING SIGNAL.

4. CDI G/S deviation pointer should be centered. Record centering error in μ Amps or pointer deflection.

CARRIER LEVEL VARIATION.

5. Vary the signal carrier level from 100μ Volts (-67 dBm) to 10,000μ Volts (-27 dBm) with the ATTENUATOR.

6. Record centering error due to carrier level variation in μ Amps or pointer deflection.

CARRIER FREQUENCY VARIATION

7. Set ATTENUATOR to 700μ Volts (-50 dBm)

8. Using the ΔF control, vary the carrier frequency ±21 kHz and note G/S pointer variation.

9. Record maximum centering error due to carrier frequency variation in μ Amps or pointer deflection.

---

10. Repeat steps 8 and 9 for each G/S channel. G/S channel selection may be made manually with the FREQUENCY selector switch or by selecting LOC frequencies and obtaining the paired G/S frequency by operating the LOC-G/S switch.

11. Return ΔF control to CAL position.

SIMULTANEOUS VARIATION OF 90 AND 150 Hz TONE MODULATION PERCENTAGES.

12. Note panel meter normal modulation indication. Using MASTER MOD. control, vary the total modulation level 5% Mod. above and below normal modulation level.

13. Record centering error due to modulation variation in μ Amps or pointer deflection.

VARIATION OF 90 AND 150 Hz TONE PHASE RELATIONSHIP (±12° of COMMON 30 Hz SUBCARRIER).

14. Set BEARING-FREQ. switch to BEARING.

15. Press 0° VOR Bearing select pushbutton and verify that display is 0.00°.

(cont'd next page)

3.11.2 (cont'd)

16. Rotate Variable BEARING control clockwise until display is 12.00°.

17. Press Ø pushbutton. Note centering error and release pushbutton.

18. Record centering error, due to tone phase shift, in pointer deflection or μ Amps.

_____

19. Rotate Variable BEARING control counterclockwise until display is 348.00°.

20. Press Ø pushbutton. Note centering error and release Ø pushbutton.

21. Record centering error, due to tone phase shift, in pointer deflection or μ Amps.

_____

22. Press 0° VOR Bearing select pushbutton.

23. Additional G/S Centering Accuracy Tests may be performed which may cause G/S centering errors, such as:

    A. Environmental conditions.

    B. Power input voltage variations.

    C. Power supply frequency variations.

3.11.3 G/S CDI DEFLECTION AGC CHARACTERISTICS and DEFLECTION BALANCE TEST.

DESCRIPTION: This test determines the effect of RF input variation on Standard Deviation signal indication.

SPECIFICATION: Deflection caused by RF level variation from 100 to 10,000 μ Volts should not be more than ±15% of Standard Deflection.

PROCEDURE:

1. Set control as follows:

   FREQUENCY. . . . . .108.100 MHz or any LOC Frequency

(cont'd next page)

3.11.3 (cont'd)

ATTENUATOR. . . . . .700µ Volts (-50 dBm)

All Tone Mod. Level Controls. . . . . CAL

Meter Function Selector Switch. 0-100

LOC DDM Selector Switch 0

G/S DDM Selector Switch 0

LOC-G/S Switch. . . . . G/S

2. If required, substitute a high accuracy (±1%) deviation meter for the G/S deviation pointer.

3. Set G/S DDM selector switch to Right 0.175 DDM. Verify that CDI G/S pointer to be up full scale (150µ Amps).

_____(✓)

4. Repeat step 3 for Left 0.175 DDM and verify that deflection is down an equal amount to step 3.

_____(✓)

5. Set G/S DDM selector switch to 0 and verify that U.U.T. CDI G/S pointer is centered.

6. Set G/S DDM selector switch to Left 0.091 DDM.

7. U.U.T. CDI G/S pointer should position to down Standard Deflection (52% of full scale and 78µ Amps).

_____(✓)

8. Vary ATTENUATOR from 100µ Volts (-67 dBm) to 10,000µ Volts (-27 dBm) and note G/S pointer variation.

9. Record effect of RF level variation on G/S pointer deflection in µ Amps or % of Standard Deflection.

_____

10. Repeat steps 7 through 9 for Right 0.091 DDM. (Up deflection).

11. Return G/S DDM selector switch to 0.

3.11.4 G/S RF SENSITIVITY TEST

DESCRIPTION: This test determines the G/S receiver RF sensitivity in μ Volts. RF sensitivity is the minimum RF signal input level required of a Standard G/S Deviation signal to produce at least 60% of Standard Deflection. This test should be made on each available channel.

SPECIFICATION: RF sensitivity should be 40μ Volts or better.

PROCEDURE:

1. Set controls as follows:

   ATTENUATOR. . . . . .700μ Volts (-50 dBm)

   FREQUENCY . . . . . .108.100 MHz or any LOC Frequency

   All Tone Mod. Level Controls. . . . . CAL

   Meter Function Selector Switch. 0-100

   LOC DDM Selector Switch 0

   G/S DDM Selector Switch 0

   LOC-G/S Switch. . . . . G/S

2. If required, substitute a high accuracy (±1%) deviation meter for the G/S deviation pointer.

3. Verify that U.U.T. CDI G/S pointer is centered.

4. Set G/S DDM selector switch to Left (or Right) 0.091 DDM and verify that G/S pointer is deflected 52% of full scale deflection (78μ Amp).

   _____

5. Reduce RF input signal level with ATTENUATOR until U.U.T. CDI G/S pointer deflection is 60% of Standard Deflection (result of step 4).

6. From ATTENUATOR dial and Correspondence Chart (Table 3-1), determine G/S RF sensitivity.

   _____μ Volts

7. Repeat step 5 and 6 for each G/S channel.

3.11.5 G/S WARNING SIGNAL TEST

DESCRIPTION: This test checks the operation of the alarm system under various signal conditions.

SPECIFICATIONS: Alarm signal should appear when G/S signal is unreliable or missing in whole or in part but should be "out of sight" or OFF when G/S signal is reliable.

PROCEDURE:

1. Set controls as follows:

   ATTENUATOR. . . . . .700μ Volts (-50 dBm)

   FREQUENCY . . . . . .108.100 MHz or any LOC Frequency

   All Tone Mod. Level Controls. . . . . CAL

   Meter Function Selector Switch. 0-100

   LOC DDM Selector Switch 0

   G/S DDM Selector Switch 0

   LOC-G/S Switch. . . . . G/S

2. Verify that U.U.T. Alarm Signal is OFF or Warning Flag is out of sight.

   _____(✓)

3. Verify that G/S pointer is centered.

   _____(✓)

NORMAL SIGNAL, FLUCTUATING RF

4. Vary ATTENUATOR from 100μ Volts (-67 dBm) to 30,000μ Volts (≃ -17 dBm) and verify that Alarm Signal is OFF or (Warning Flag) out of sight.

   _____(✓)

RF SIGNAL ABSENT

5. Set ATTENUATOR to -112 dBm and disconnect RF output connector from U.U.T.. Verify that Alarm Signal or Warning Flag is visible.

   _____(✓)

MISSING 90 or 150 Hz TONES

6. Reconnect RF connector to U.U.T. and set ATTENUATOR to 700μ Volts (-50 dBm). Verify that Alarm Signal is OFF or Warning Flag is out of sight.

(cont'd next page)

3.11.5 (cont'd)

7. Set LOC DDM selector switch to 150 Hz. Alarm Signal or Warning Flag should be visible.

_____(✓)

8. Set LOC DDM selector switch to 90 Hz. Alarm Signal or Warning Flag should be visible.

_____(✓)

MISSING 90 and 150 Hz TONES

9. Set G/S DDM selector switch to 150 Hz and verify that LOC DDM selector switch is set to 90 Hz. Alarm Signal or Warning Flag should be visible.

_____(✓)

MARGINAL G/S SIGNAL STRENGTH (WITH STANDARD G/S DEVIATION SIGNAL)

10. Set controls as follows:

ATTENUATOR. . . . . .700μ Volts (-50 dBm)

All Tone Mod. Level Controls. . . . . CAL

LOC-G/S Switch. . . . . G/S

LOC DDM Switch. 0

G/S DDM Switch. . . . . Left or Right 0.091 DDM

11. Verify that U.U.T. CDI G/S pointer is at Standard Deflection (52% of full scale).

12. Reduce RF signal level with ATTENUATOR until U.U.T. G/S pointer is deflected 50% of standard deflection. Alarm Signal or Warning Flag should be visible.

_____(✓)

3.11.6 ILS CDI G/S DEVIATION INDICATION

DESCRIPTION: This test checks the U.U.T. CDI G/S pointer deflection with precise tone inputs. (A precision meter (±1%) may be substituted for the U.U.T. G/S pointer movement to check receiver circuitry or deflection current)

SPECIFICATIONS: As stipulated in the U.U.T. manufacturer's specifications.

(cont'd next page)

3.11.6 (cont'd)

PROCEDURES:

1. Set controls as follows for Standard Centering Signal:

   FREQUENCY. . . . . 108.100 MHz or any LOC Frequency

   ATTENUATOR . . . . . 700µ Volts (-50 dBm)

   All Tone Mod. Level Controls . . . . . .CAL

   LOC-G/S Switch . . . . . .G/S

   G/S DDM Switch 0

   LOC DDM Switch 0

   BEARING-FREQ. Switch . . . . . .FREQ.

2. Verify that U.U.T. CDI G/S pointer is centered.

CDI G/S DEFLECTION RESPONSE AT 0.175 DDM

3. Set G/S DDM selector switch to Left 0.175 DDM. U.U.T. G/S pointer should reach 67% of full scale deflection within 0.6 seconds (150µ Amps). Pointer overshoot should not exceed 2% of full scale deflection.

   _____(✓)

4. Set G/S DDM selector switch to Right 0.175 DDM. U.U.T. G/S pointer should reach 67% of full scale deflection within 0.6 seconds (150µ Amps). Pointer overshoot should not exceed 2% of full scale deflection.

   _____(✓)

CDI G/S DEFLECTION AT 0.200 DDM

5. Set G/S DDM selector switch to Right 0.400 DDM and check that pointer deflection does not decrease from up full scale.

   _____(✓)

6. Set G/S DDM selector switch to Left 0.400 DDM and check that pointer deflection does not decrease from down full scale.

   _____(✓)

(cont'd next page)

3.11.6 (cont'd)

CDI G/S DEFLECTION AT 0.091 DDM

7. Set G/S DDM selector switch to Left 0.091 DDM and check that pointer deflection is down Standard Deflection (78μ Amps).

_____(✓)

8. Set G/S DDM selector switch to Right 0.091 DDM and check that pointer deflection is up Standard Deflection (78μ Amps).

_____(✓)

CDI G/S DEFLECTION AT 0.045 DDM

9. Set G/S DDM selector switch to Right 0.045 DDM and check that pointer deflection is up half Standard Deflection (39μ Amps).

_____(✓)

10. Set G/S DDM selector switch to Left 0.045 DDM and check that pointer deflection is down half Standard Deflection (39μ Amps).

_____(✓)

11. Return G/S DDM selector switch to 0. G/S pointer should be centered (0μ Amps).

_____(✓)

3.11.7 Other conditions which may be used in the foregoing tests are as follows:

A. Environmental Conditions

B. Power Input Variations.

C. Power Supply Frequency Variations.

NOTE: Tones may be injected via the ext. Mod. input on the rear panel for tests which require special tone quality or frequency. Outputs of all tones are also available at the rear panel for specialized tests.

3.12 VHF RECEIVER TESTING (118 to 135 MHz Band)

3.12.1 The NAV-750 series test set provides a 1020 Hz signal at 30% modulation on COMM frequencies. Channel spacing in Auto-Channel mode is 25, 50, 100, and 200 kHz. Any channel is selectable with the FREQUENCY selector switches. The External Modulation input jack on the back panel will allow signals other than the 1020 Hz, automatically provided, to be applied to the RF output. When this is done, the 1020 Hz tone may be eliminated by turning the 1020 Hz control to maximum counterclockwise position (0 mod.) out of the CAL detent position. The modulation level of the Ext. Mod. input signal can be adjusted with the MASTER MOD. control from 0 to maximum modulation as indicated on the % modulation meter on the front panel.

3.12.2 COMM TESTS.

DESCRIPTION: This test checks the gain of all COMM. channels. Manual or automatic channeling may be used. In this test an RF level is set and modulated at 30% with a 1020 Hz tone. U.U.T. output measurements must be made with appropriate instrumentation.

ADDITIONAL TEST EQUIPMENT: A meter which measures output in dB.

PROCEDURE:

1. Set controls as follows:

   FREQUENCY. . . . . .118.000 MHz or any COMM Frequency

   ATTENUATOR . . . . . .20μ Volts (-81 dBm)

   All Tone Mod. Level Controls . . . . . .CAL

COMM CHANNEL GAIN TEST

2. To use the Auto-Channeling feature of the NAV-750, select the channel spacing, set channeling rate control to maximum counterclockwise, and set the AUTO-MANUAL switch to AUTO. Then adjust the channeling rate control for the desired rate.

3. Check each COMM. channel for output that should be not less than manufacturer's specified output.

_____(✓)

(cont'd next page)

3.12.2 (Cont'd)

COMM CHANNEL SENSITIVITY

4. Reduce RF signal with ATTENUATOR until the signal plus noise-to-noise ratio of 6 dB is obtained. This RF level should not exceed 5μ Volts (-93 dBm) for each COMM channel.

_____(✓)

AVC CHARACTERISTICS

5. Vary RF signal with ATTENUATOR from 10μ Volts (-87 dBm) to 20,000μ Volts (-21 dBm). The audio output should not vary more than 10 dB at input levels of 10, 100, 1000, 3000, 10,000, and 20,000μ Volts for each COMM channel.

_____(✓)

3.12.3 Additional checks may be made using other than 1020 Hz tone modulation. External tone modulation percentage is variable via the MASTER MOD. control on the front panel. To check tuning at each channel, the ΔF control may be used to determine resonance.

3.13 MARKER BEACON RECEIVER TESTS WITH NAV-750B

3.13.1 The NAV-750B Bench Test Set is capable of testing Marker Beacon Receivers operating on 75.000 MHz. The test set provides a tuning range from 70.000 to 79.90 MHz. Tones of 1020, 400, 1300, and 3000 Hz modulated at 95% are selectable with the Meter Function and Tone Selector Switch. External modulation may be added via the Ext. Mod. jack on the back panel and modulation level can be set with the MASTER MOD control.

3.13.2 MARKER BEACON RECEIVER SELECTIVITY TEST

DESCRIPTION: This test essentially checks the frequency response of the U.U.T.

Additional Test Equipment: A meter which measures output in dB.

PROCEDURE:

1. Set controls as follows:

FREQUENCY. . . . . 75.000 MHz

All Tone Mod Controls. . . . . .CAL

(cont'd next page)

3.13.2 (cont'd

Meter Function and Tone Selector Switch. . . .400 Hz

ATTENUATOR. . . . . .As required by manufacturer's specifications.

2. Using ΔF control, determine frequencies where output is at least 40 dBc.
(Check both high & low sense modes). _____

3. Using ΔF control, determine frequency span where output is down less than 6 dBc.
(Check both high & low sense modes). _____

AGC CHARACTERISTICS

4. Vary ATTENUATOR from lamp threshold input power to 50,000μ Volts (-13 dBm). Audio level should vary not more than 10 dB.

_____(✓)

THREE LAMP OPERATION

5. Verify that Meter Function Tone Selector switch is set to 400 Hz. Set ATTENUATOR to -112 dBm.

6. Increase RF output signal with ATTENUATOR until the Blue Marker Beacon Lamp (outer Mkr) comes on.

   A. At High Sense Mode _____μ Volts

   B. At Lo Sense Mode _____μ Volts

   C. Set ATTENUATOR to -112 dBm.

7. Set Meter Function and Tone Selector Switch to 1300 Hz.

8. Increase RF output signal with ATTENUATOR until the AMBER MARKER Beacon Lamp (Middle Marker) comes on.

   A. At High Sense Mode _____μ Volts

   B. At Lo Sense Mode _____μ Volts

   C. Set ATTENUATOR to -112 dBm.

9. Set Meter Function and Tone Selector switch to 3000 Hz.

(cont'd next page)

3.13.2 (cont'd)

10. Increase RF output signal with ATTENUATOR until the White Marker Beacon Lamp (Inner Marker) comes on.

A. At High Sense Mode _____µ Volts

B. At Lo Sense Mode _____µ Volts

11. Return all controls to normal or CAL.

3.14 The foregoing Operating Procedures are in no way intended to be used with specific Units Under Test. They are included here to illustrate the operational characteristics and capabilities of the NAV-750 series Bench Test Set to those potential users unfamiliar with the IFR NAV-750.

SECTION IV

THEORY OF OPERATION

4.1 INTRODUCTION. This section contains general circuit theory for the NAV-750 Series Bench Test Sets. Included is a general description and a more detailed presentation of the VOR section.

4.2 GENERAL DESCRIPTION. Basically, the NAV-750 series test set may be divided into several sections that can function separately. However, the power supply is common to all other sections. The various sections are : 1) the power supply, 2) the VOR sections, 3) the LOC and G/S section, and 4) the RF generator section.

4.2.1 POWER SUPPLY. The power section supplies six voltages of +5, +12, -12, +24, -18, and +170 volts relative to chassis as common ground. The 170 volts is used only for the high voltage gas discharge counter display. The other voltages are used throughout the test set. The input power is 115 or 240 VAC, 50 Hz to 400 Hz. The standard cooling fan operates on 50 to 60 Hz only. An optional dc fan is available for 400 Hz operation.

4.2.2 VOR SECTION. (See Figure 4-1) The VOR section is located mainly on PC-4 and PC-5. The VOR bearing is selected on these two boards. The bearing oscillator (later referred to as the 2.16 MHz Clock Oscillator) is located on PC-4 and provides the reference signal to the VOR bearing counter system. Four tones are derived from frequencies obtained from the bearing counter system: The 30 Hz Ref. tone, the 30 Hz Var. tone, the 90 Hz tone, and the 150 Hz tone. The two 30 Hz tone signals are applied to PC-2 where the square waves are converted to sine waveforms. combined with a 9960 Hz signal, and fed to PC-3.

4.2.2.1 On PC-3, the VOR tones are applied to controls which vary the modulation level. PC-3 also switches all modulation tones as determined by the output RF selection. The tones are then summed and sent to the Modulator Amplifier assembly where they modulate the RF output signal.

4.2.2.2 The VOR selected bearing is displayed on a front panel counter display. An RF DEMOD output is used to check the accuracy of the bearing at 90° and 270° by circuitry on PC-1.

4.2.3 LOCALIZER AND GLIDE SLOPE. (See Figure 4-1). The 90 Hz and 150 Hz tones used in the LOC and G/S system are picked off the VOR bearing counter on PC-4 and therefore, the tone frequencies are controlled by the 2.16 MHz Clock Oscillator. The phase relationship of the 90 Hz and 150 Hz tones is normally fixed but can be varied by shifting the 150 Hz phase at a value five times the selected VOR bearing. This is accomplished by rotating the front panel VOR BEARING control and pressing the Ø pushbutton switch.

4.2.3.1 The 90 Hz and 150 Hz square wave tone signals are routed from the PC-4 to PC-5 where they are converted to sine waveforms. They are then combined at the front panel DDM selector switches and routed to the Tone Summation board PC-3 and then sent to the Modulator Amplifier

4.2.3.2 For COMM operations, a 1020 Hz tone oscillator on PC-2 provides test tones to modulate the RF output signal from 118.000 MHz to 155.000 MHz. The 1020Hz tone is also used as an Ident. signal on VOR and LOC outputs. In the NAV-750B test set, the 1020 Hz oscillator is switched (by the Meter Function and Tone Selector switch) to provide Marker Beacon Tones at 400 Hz, 1300 Hz, and 3000 Hz.

4.2.4 RF SECTION. (See Figure 4-2). The RF oscillator is controlled by a phase-lock system referenced to the 10 MHz crystal oscillator. The frequency is controlled on PC-6 which is connected to the front panel FREQUENCY control switches that select the desired RF output. (See Figure 4-1 for RF & Frequency Select Block Diagram).

4.2.4.1 The RF signal is translated into 2 out of 5 and parallel BCD code select systems on PC-7 which controls outputs at a rear panel connector (J-8) that may be used to remotely channel a set under test. (See Figure 3-6 for J-8 pin connections).

4.2.4.2 The RF signal from the oscillator assembly is routed to the Modulator Amplifier where tone modulation takes place. The modulated RF signal is then passed through the output attenuator to the front panel output connector (J-3).

4.3 VOR SECTION DESCRIPTION. (See the VOR Systems Block Diagram, Figure 4-1 and Localizer/Brg. Control & Brg. Logic Schematic in the Schematics Section).

4.3.1 The 2.16 MHz crystal oscillator is the reference for VOR bearings via parts of X401 and X431. Capacitor C-401 in the oscillator circuit is the trimmer capacitor used to set the frequency to exactly 2.16 MHz. If an external clock source is required, grounding pin J10-8 stops the oscillator and the external input (which should be TTL compatible, 0 to 5V squarewave) can then be applied to J10-9.

4.3.2 The 2.16 MHz oscillator output is divided to 1.08 MHz (which is the frequency required for a .01° count) and applied to five counter stages to obtain bearing counts of .01, 0.1, 1.0, 10, and 100 degree steps.

4.3.3 BEARING COUNTER. At a count representing 360 degrees, all five counter stages reset to zero and begin to count up again.

4.3.3.1 At a count of 180 degrees, gate X435B senses the 80 degree output of the 10 degree counter and the 100 degree output of the 100 degree counter. The gate output sets Flipflop X429A. (The $\overline{Q}$ output of X429A forms the VOR 30 Hz Reference signal). At 180 degrees $\overline{Q}$ goes to a logic 0 forming the first half of the 30 Hz Reference signal.

4.3.3.2 At 0 degrees, or 360 degrees, another gate senses 360 degrees from appropriate counter outputs. This gate output operates Oneshot X436A which is used to provide a wide reset pulse to reset all bearing counters to zero. Oneshot X436A also resets Flipflop X429A which causes $\overline{Q}$ to go high thereby forming the second half of the 30 Hz Reference signal. Therefore, the VOR 30 Hz Reference signal is high when the bearing counter is between 0 degrees and 180 degrees and low between 180 degrees and 0 degrees.

4.3.3.3 90 Hz AND 150 Hz TONES. A by-product of the Bearing Counter is the derivation of the 90 and 150 Hz tones. The tones are obtained from points in the counter. The output of the 1 degree decade counter is divided by 12 by X426 resulting in a 90 Hz squarewave. This counter is reset at the same time as the bearing count by X436A.

4.3.3.3.1 The output of the 0.1 degree counter is divided by 72 to obtain 150 Hz. Reset to the "divide-by-72" counter is applied from one of two sources. The first source is the "normal" one, Oneshot X436A, which also resets X433 and X434 coincident with the bearing counter. The second reset source is the 30 Hz Variable squarewave output from Flipflop X402 only when the front panel "Ø" (phase) switch

(cont'd next page)

is pressed. This shifts phase relationship of the 150 Hz signal relative to the 90 Hz signal in increments equal to five times the selected VOR bearing.

4.3.4 VOR BEARING SELECTION. (Producing the 30 Hz Variable Signal) The VOR bearing is selected by circuitry on PC-4 and PC-5. A programmable up-down counter is run "parallel" to the bearing counter and contains stages .01, 0.1, 1.0, 10, and 100 degree steps. The up-down counter is connected to the bearing counter through five comparator IC's, one for each counter stage. When the counts in the two counters are exactly equal, all comparator outputs enable a set of gates(X430, X412A, X408D, X415B, X408E) to achieve a logic 0 at the output of X415B. At all other times X415B output is high.

4.3.4.1 For example, assume that the up-down counter has stored in it a bearing of 275 degrees. As the bearing counter counts up from zero degrees, the comparators continuously compare the counts in the two parallel counters. At 275 degrees equality is sensed and X415B output changes to a low state and causes Flipflops X430 and X402 to "set".

4.3.4.2 The "setting" of X430 and X402 causes the Q output of X402B to go high and form the first or positive half of the 30 Hz variable squarewave signal. X402B Q going high also enables gate X431C which allows .01 degree pulses from X430A to be counted by a 180 degree counter consisting of X402, X403, X404, X405, and X406. At the accumulated count of 180 degrees, gate X401A is enabled and in turn resets Flipflop X402B. Resetting X402B causes X402B Q to go low which forms the last half of the 30 Hz variable squarewave output signal.

4.3.4.3 As a result, the 30 Hz variable squarewave is high for 180 degrees until it goes low when the selected bearing appears at the comparator output 180 degrees later. The Q output of X402B is the "TO" 30 Hz output signal and the $\overline{Q}$ output of X402B is the "FROM" 30 Hz output signal. One of these two signals is selected by the front panel TO-FROM selector switch.

4.3.5 UP-DOWN COUNTER. The programmed up-down counter is operated by two sources. One source is a set of gating logic on PC-5 which is operated by 12 pushbutton bearing select switches on the front panel. Depressing any of these pushbutton switches causes that particular bearing to be loaded into the up-down counter.

4.3.5.1 When any bearing pushbutton switch is pressed, either gate X5002 or gate X5001 is disabled and, through other gates, causes the Load Line to go low. While the load input is low, data present at the preset inputs of the up-down counter sets the counter to correspond to that data. When any pushbutton bearing select switch is activated the .01, 0.1, and 1 degree counters are preset to zero.

4.3.5.2 Gate X5003 always causes a bearing of 10 degrees to be preset. X5004 always causes 20 degrees to be preset. X5005A always causes 40 degrees to be preset. X5005B always causes 80 degrees to be preset. All of the above listed gates operate on counter X413, the 10 degree counter. Combinations of inputs can cause any bearing of 10 to 90 degrees to be preset into X413.

4.3.5.3 Gate X5007 always causes 100 degrees to be preset and X5006 always causes 200 degrees to be preset. These two gates operate into X414, the 100 degree counter. Both applied together cause 300 degrees to be preset.

4.3.5.4 When the NAV-750 series test set is turned on, a system normalizer causes the same reaction as depressing the 0 degree pushbutton selector switch and initially sets the up-down counter to zero bearing. The normalizer consists of X5008B and associated circuitry.

4.3.5.5 Two additional pushbutton switches on the front panel allow bearing changes of +10 and -10 degrees to be made to any bearing present in the up - down counter. For example, if the -10 degree switch is depressed, X5011B is disabled and the output goes high. The output of this gate controls the up-down control line of the counter. If the line is high, the counter will count down. Conversely, if the line is low the counter will count up. Thus the -10 degree switch causes the counter to be able to count down.

4.3.5.6 Depressing the +10 degree switch disables gate X5011C, causing its output to go high and enable gate 5011B causing its output to go low. Thus the counter is set to count up.

4.3.5.7 The actual clock pulse causing the +10 or -10 degree count change comes from Oneshot X5012B which is set through either diode CR5002 or CR5003. The output of X5012B operates the Schmitt Trigger X5010D and X5010E which applies one clock pulse to X413 and advances or retards the counter one count (equal to 10 degrees). Because of the way the total up-down counter is connected, the entire counter will retard by a 10 degree step if X413 is at zero bearing and -10 degrees is called for.

(cont'd next page)

This may mean, for example, going from 5.72 degrees (-10 degrees) to 355.72 degrees.

4.3.5.8 The second way to change the count in the up-down counter to determine the VOR Bearing is by the Bearing Control on the front panel which alters the bearing in either .01 or .05 degree steps with each 1/40 revolution. The bearing control consists of a 40-tooth gear whose teeth break the light path of two transducers. As the light path to each transducers is broken the output goes high. One transducer is used as a clock source and the other as a direction of rotation sensor. Clockwise rotation of the bearing control increases the bearing.

4.3.5.9 As the gear teeth break the light path, pulses are formed by X5013 and inverted by X5008C to form clock pulses. These are applied to Oneshot X5012A and to gate X5019B.

4.3.5.10 A front panel switch selects .01, or .05, degree increments. If .01 degrees is selected, X5019 selects clock pulses before Oneshot X5012A. If .05 degree increments are selected, X5019 selects clock pulses from a UJT oscillator. Oneshot X5012A enables the UJT oscillator to operate in pulse groups of five as set by potentiometer R5091.

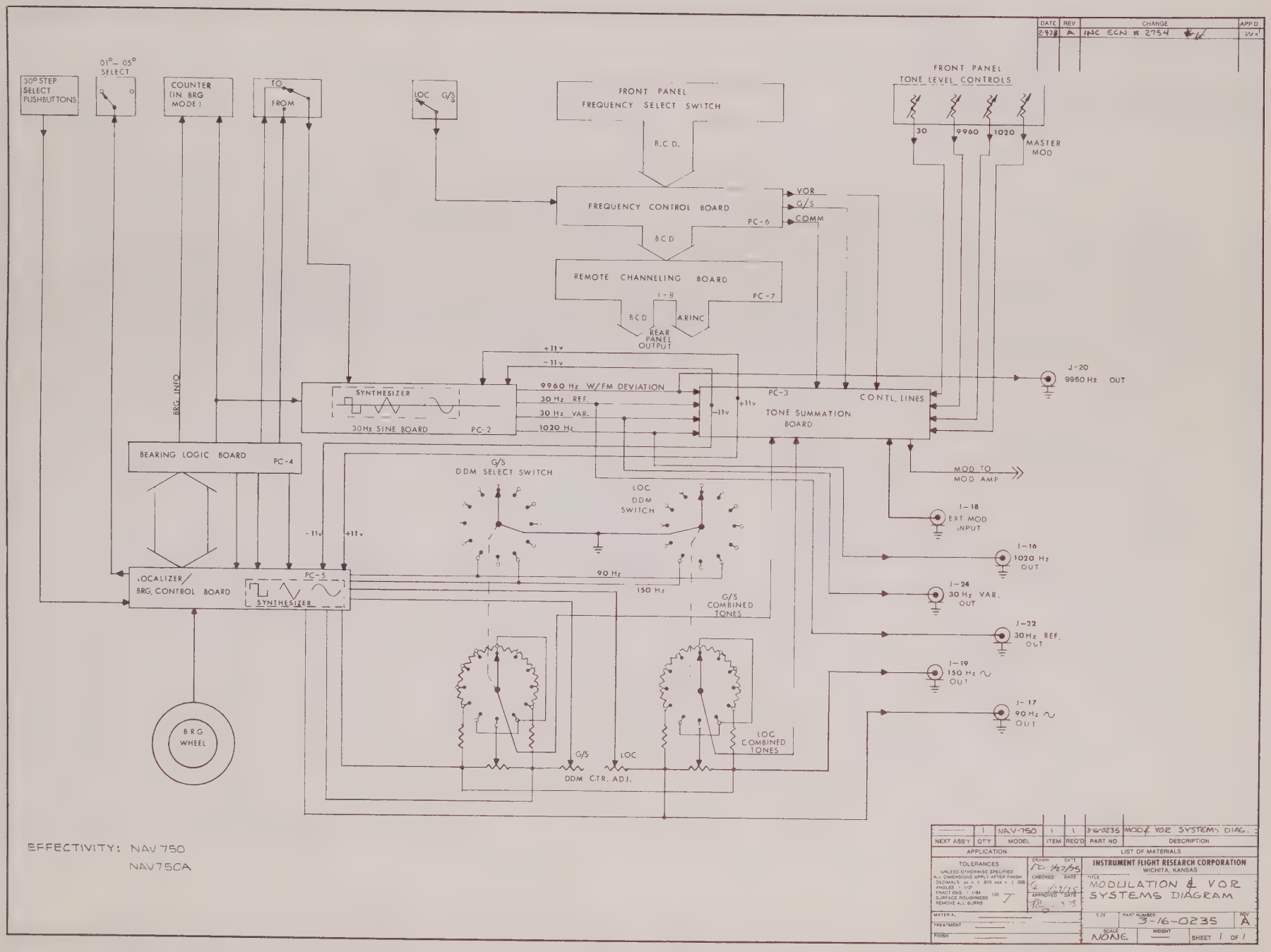
DATE
REV
CHANGE
APP'D
2-27-78
A
INC ECN # 2754
30° STEP SELECT PUSHBUTTONS
01°– 05° SELECT
COUNTER (IN BRG MODE)
TO
FROM
LOC G/S
FRONT PANEL FREQUENCY SELECT SWITCH
B.C.D.
FRONT PANEL TONE LEVEL CONTROLS
30
9960
1020
MASTER MOD
FREQUENCY CONTROL BOARD
PC-6
VOR
G/S
COMM
BCD
REMOTE CHANNELING BOARD
PC-7
1-8
BCD
ARINC
REAR PANEL OUTPUT
+11v
-11v
BRG. INFO
SYNTHESIZER
30Hz SINE BOARD
PC-2
9960 Hz W/FM DEVIATION
30 Hz REF.
30 Hz VAR.
1020 Hz
PC-3
TONE SUMMATION BOARD
CONTL. LINES
J-20
9960 Hz OUT
BEARING LOGIC BOARD
PC-4
G/S DDM SELECT SWITCH
LOC DDM SWITCH
MOD TO MOD AMP
J-18
EXT MOD INPUT
J-16
1020 Hz OUT
J-24
30 Hz VAR. OUT
J-22
30 Hz REF. OUT
J-19
150 Hz ~ OUT
J-17
90 Hz ~ OUT
LOCALIZER/ BRG. CONTROL BOARD
PC-5
SYNTHESIZER
90 Hz
150 Hz
G/S COMBINED TONES
LOC COMBINED TONES
BRG WHEEL
G/S
LOC
DDM CTR. ADJ.
EFFECTIVITY: NAV 750
NAV 750A
NAV-750
3-16-0235
MOD & VOR SYSTEMS DIAG.
NEXT ASS'Y
QTY
MODEL
ITEM
REQ'D
PART NO
DESCRIPTION
APPLICATION
LIST OF MATERIALS
TOLERANCES
UNLESS OTHERWISE SPECIFIED
ALL DIMENSIONS APPLY AFTER FINISH
DECIMALS .XX ± .010 .XXX ± .005
ANGLES ± 1/2°
FRACTIONS ± 1/64
SURFACE ROUGHNESS 125
REMOVE ALL BURRS
MATERIAL
TREATMENT
FINISH
DRAWN
DATE
CHECKED
DATE
APPROVED
DATE
INSTRUMENT FLIGHT RESEARCH CORPORATION
WICHITA, KANSAS
TITLE
MODULATION & VOR SYSTEMS DIAGRAM
SIZE
PART NUMBER
3-16-0235
REV
A
SCALE
NONE
WEIGHT
SHEET 1 OF 1

Figure 4-1

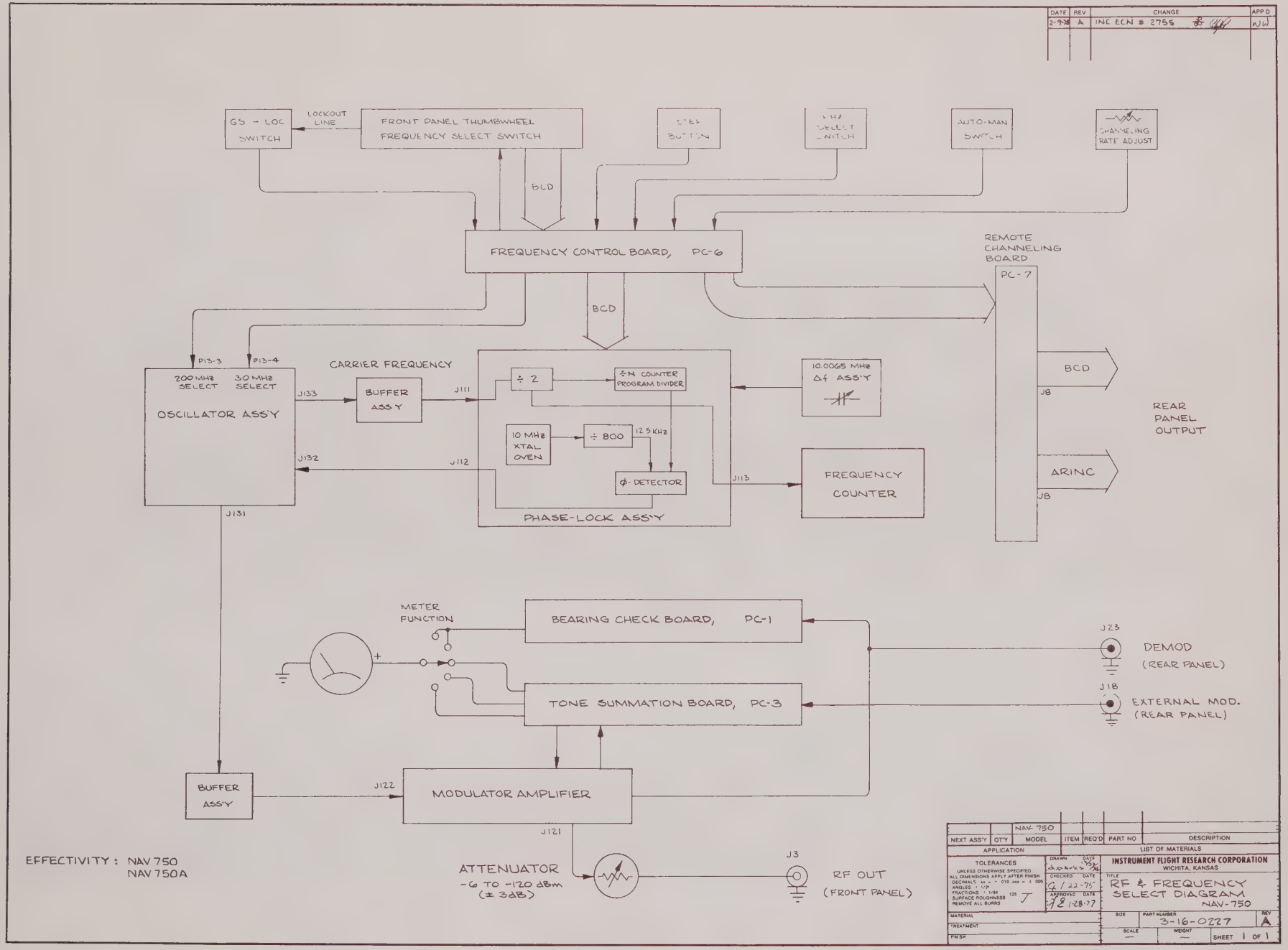
DATE
REV
CHANGE
APP'D
2-9-78
A
INC ECN # 2755
NJW
GS - LOC SWITCH
LOCKOUT LINE
FRONT PANEL THUMBWHEEL FREQUENCY SELECT SWITCH
STEP BUTTON
1 Hz SELECT SWITCH
AUTO-MAN SWITCH
CHANNELING RATE ADJUST
BCD
FREQUENCY CONTROL BOARD, PC-6
REMOTE CHANNELING BOARD PC-7
BCD
J8
REAR PANEL OUTPUT
ARINC
J8
P13-3
P13-4
200 MHz SELECT
30 MHz SELECT
OSCILLATOR ASS'Y
CARRIER FREQUENCY
J133
BUFFER ASS'Y
J111
÷ 2
÷N COUNTER PROGRAM DIVIDER
10.0065 MHz Δf ASS'Y
10 MHz XTAL OVEN
÷ 800
12.5 KHz
φ - DETECTOR
PHASE-LOCK ASS'Y
J132
J112
J113
FREQUENCY COUNTER
J131
METER FUNCTION
BEARING CHECK BOARD, PC-1
J23
DEMOD (REAR PANEL)
TONE SUMMATION BOARD, PC-3
J18
EXTERNAL MOD. (REAR PANEL)
BUFFER ASS'Y
J122
MODULATOR AMPLIFIER
J121
ATTENUATOR -6 TO -120 dBm (± 3dB)
J3
RF OUT (FRONT PANEL)
EFFECTIVITY: NAV 750
NAV 750A
NAV-750
NEXT ASS'Y
QTY
MODEL
ITEM REQ'D
PART NO
DESCRIPTION
APPLICATION
LIST OF MATERIALS
TOLERANCES
UNLESS OTHERWISE SPECIFIED
ALL DIMENSIONS APPLY AFTER FINISH
DECIMALS .xx ± .010 .xxx ± .005
ANGLES ± 1/2°
FRACTIONS ± 1/64
SURFACE ROUGHNESS 125
REMOVE ALL BURRS
MATERIAL
TREATMENT
FINISH
DRAWN
CHECKED
APPROVED
DATE
12-28-77
INSTRUMENT FLIGHT RESEARCH CORPORATION
WICHITA, KANSAS
TITLE
RF & FREQUENCY SELECT DIAGRAM NAV-750
SIZE
PART NUMBER
3-16-0227
REV
A
SCALE
WEIGHT
SHEET 1 OF 1

Figure 4-2

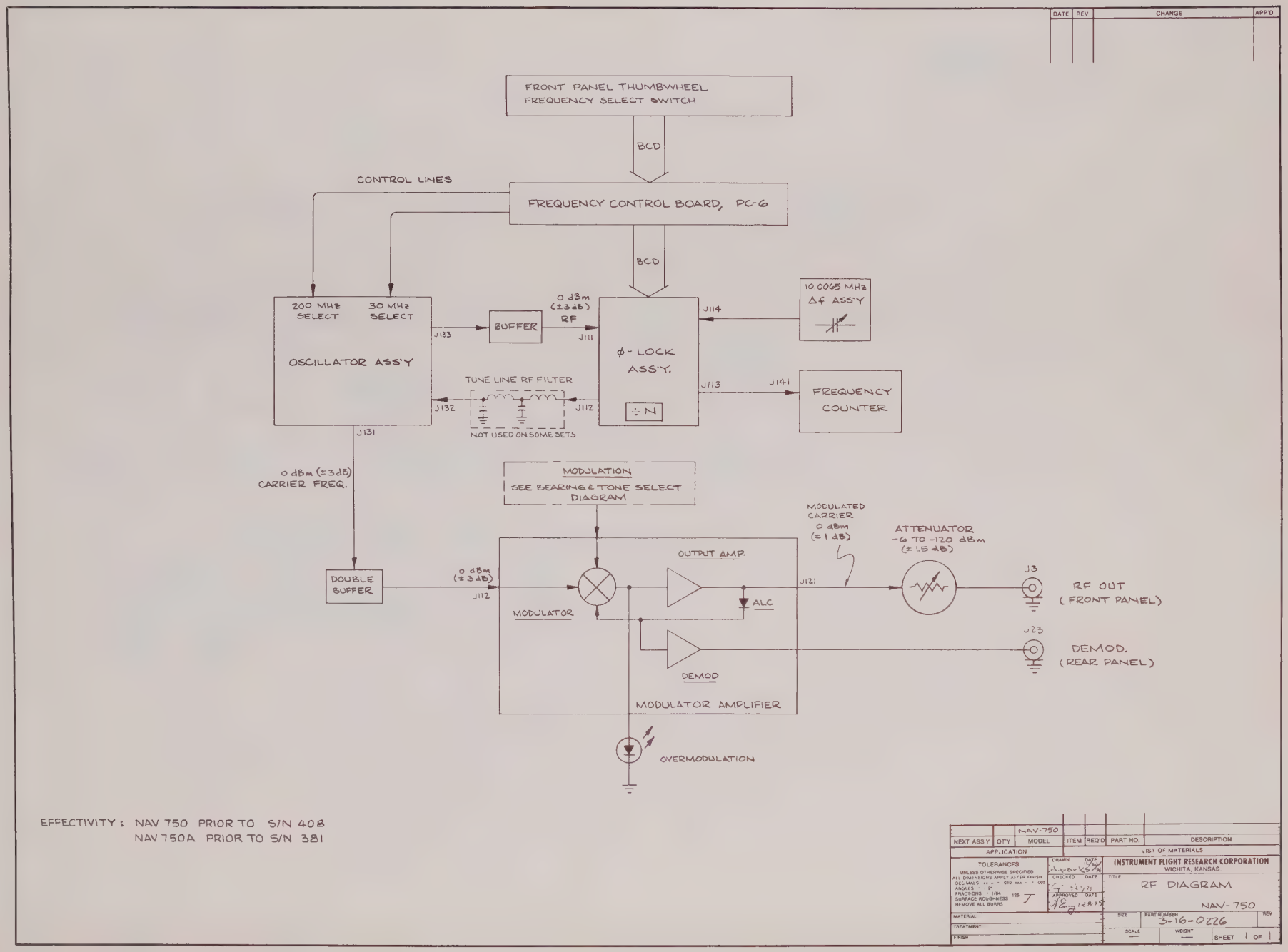
DATE
REV
CHANGE
APP'D
FRONT PANEL THUMBWHEEL FREQUENCY SELECT SWITCH
BCD
CONTROL LINES
FREQUENCY CONTROL BOARD, PC-6
BCD
200 MHz SELECT
30 MHz SELECT
OSCILLATOR ASS'Y
J133
BUFFER
0 dBm (±3dB) RF
J111
ϕ-LOCK ASS'Y.
÷N
J114
10.0065 MHz Δf ASS'Y
J113
J141
FREQUENCY COUNTER
TUNE LINE RF FILTER
J132
J112
NOT USED ON SOME SETS
J131
0 dBm (±3dB) CARRIER FREQ.
MODULATION
SEE BEARING & TONE SELECT DIAGRAM
MODULATED CARRIER 0 dBm (±1 dB)
ATTENUATOR -6 TO -120 dBm (±1.5 dB)
DOUBLE BUFFER
0 dBm (±3dB)
J112
OUTPUT AMP.
J121
ALC
MODULATOR
J3
RF OUT (FRONT PANEL)
J23
DEMOD. (REAR PANEL)
DEMOD
MODULATOR AMPLIFIER
OVERMODULATION
EFFECTIVITY: NAV 750 PRIOR TO S/N 408
NAV 750A PRIOR TO S/N 381
NAV-750
NEXT ASS'Y
QTY
MODEL
ITEM
REQ'D
PART NO.
DESCRIPTION
APPLICATION
LIST OF MATERIALS
TOLERANCES
UNLESS OTHERWISE SPECIFIED
ALL DIMENSIONS APPLY AFTER FINISH
DECIMALS
ANGLES
FRACTIONS
SURFACE ROUGHNESS
REMOVE ALL BURRS
DRAWN
DATE
CHECKED
DATE
APPROVED
DATE
INSTRUMENT FLIGHT RESEARCH CORPORATION
WICHITA, KANSAS.
TITLE
RF DIAGRAM
NAV-750
MATERIAL
TREATMENT
FINISH
SIZE
PART NUMBER
3-16-0226
REV
SCALE
WEIGHT
SHEET 1 OF 1

Figure 4-3

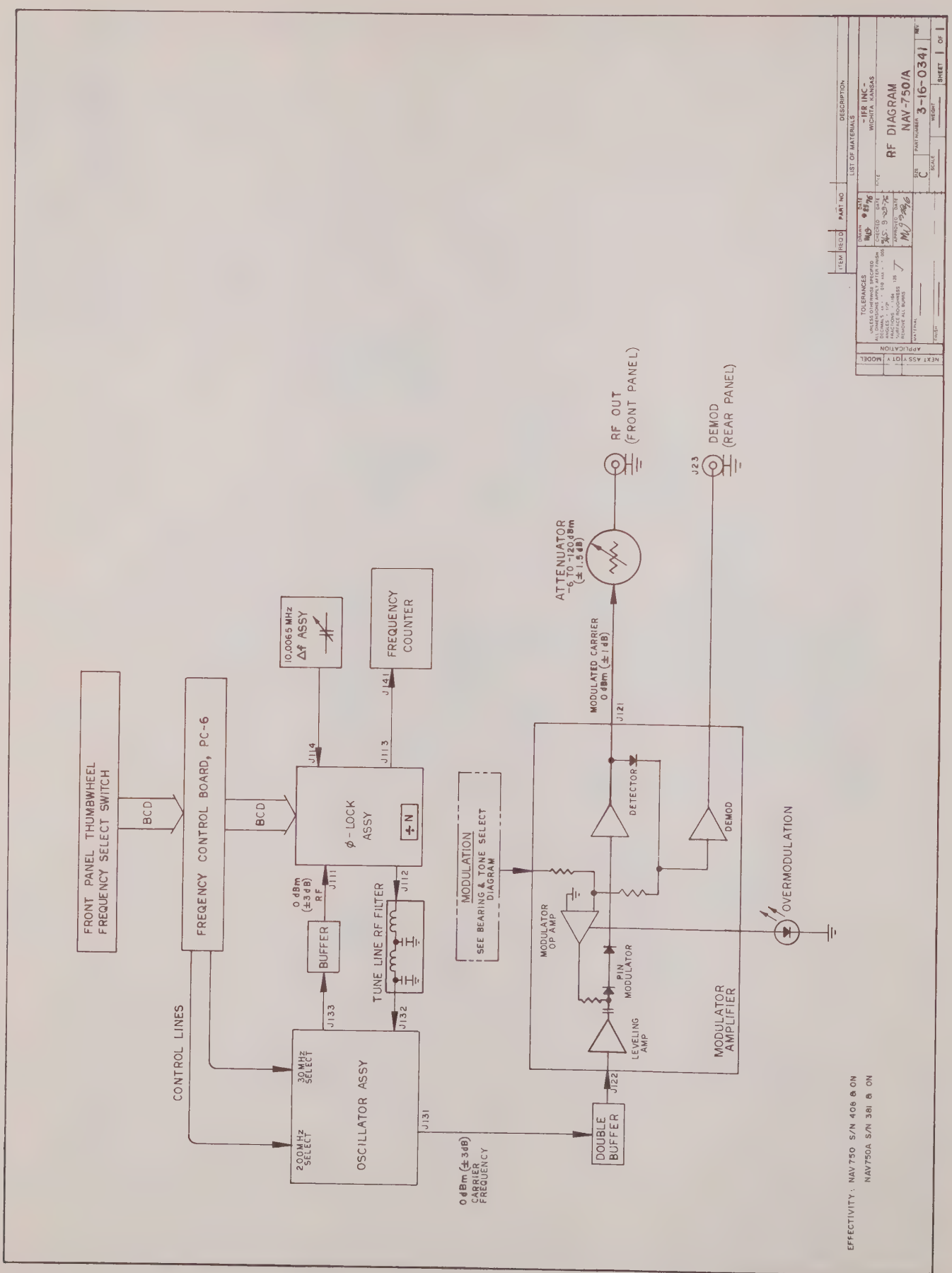
FRONT PANEL THUMBWHEEL FREQUENCY SELECT SWITCH
BCD
FREQENCY CONTROL BOARD, PC-6
BCD
CONTROL LINES
10.0065 MHz Δf ASSY
FREQUENCY COUNTER
J114
J113
J141
φ-LOCK ASSY
±N
0 dBm (±3dB) RF
J111
BUFFER
TUNE LINE RF FILTER
J112
J132
J133
MODULATION
SEE BEARING & TONE SELECT DIAGRAM
ATTENUATOR -6 TO -120dBm (±1.5dB)
RF OUT (FRONT PANEL)
MODULATED CARRIER 0 dBm (±1dB)
J121
J23
DEMOD (REAR PANEL)
DETECTOR
DEMOD
MODULATOR OP AMP
PIN MODULATOR
LEVELING AMP
MODULATOR AMPLIFIER
OVERMODULATION
30 MHz SELECT
200 MHz SELECT
OSCILLATOR ASSY
J131
0 dBm (±3dB) CARRIER FREQUENCY
DOUBLE BUFFER
J122
EFFECTIVITY: NAV 750 S/N 406 & ON
NAV 750A S/N 381 & ON
ITEM
REQ'D
PART NO
DESCRIPTION
LIST OF MATERIALS
-IFR INC-
WICHITA, KANSAS
RF DIAGRAM
NAV-750/A
SIZE C
PART NUMBER 3-16-0341
SCALE
WEIGHT
SHEET 1 OF 1

Figure 4-4

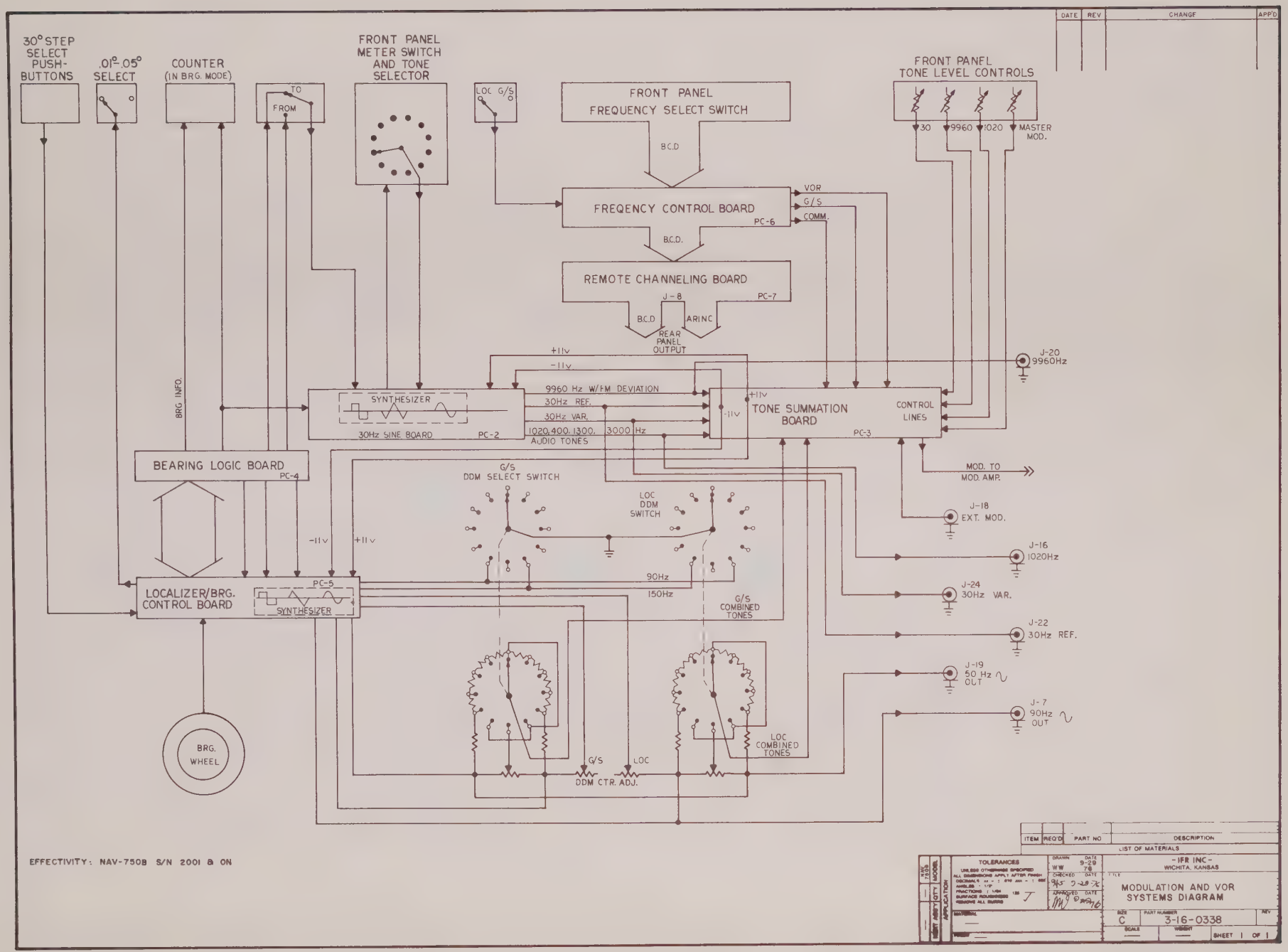
30° STEP SELECT PUSH-BUTTONS
.01°-.05° SELECT
COUNTER (IN BRG. MODE)
TO
FROM
FRONT PANEL METER SWITCH AND TONE SELECTOR
LOC G/S
FRONT PANEL FREQUENCY SELECT SWITCH
B.C.D
FREQENCY CONTROL BOARD
PC-6
VOR
G/S
COMM.
B.C.D.
REMOTE CHANNELING BOARD
PC-7
J-8
B.C.D
ARINC
REAR PANEL OUTPUT
FRONT PANEL TONE LEVEL CONTROLS
30
9960
1020
MASTER MOD.
+11v
-11v
J-20 9960Hz
BRG. INFO.
SYNTHESIZER
30Hz SINE BOARD
PC-2
9960 Hz W/FM DEVIATION
30Hz REF.
30Hz VAR.
1020,400,1300, 3000 Hz AUDIO TONES
TONE SUMMATION BOARD
PC-3
CONTROL LINES
BEARING LOGIC BOARD
PC-4
G/S DDM SELECT SWITCH
LOC DDM SWITCH
MOD. TO MOD. AMP.
J-18 EXT. MOD.
J-16 1020Hz
J-24 30Hz VAR.
J-22 30Hz REF.
J-19 50 Hz OUT
J-7 90Hz OUT
LOCALIZER/BRG. CONTROL BOARD
PC-5
SYNTHESIZER
90Hz
150Hz
G/S COMBINED TONES
LOC COMBINED TONES
BRG. WHEEL
G/S
LOC
DDM CTR. ADJ.
EFFECTIVITY: NAV-750B S/N 2001 & ON
DATE
REV
CHANGE
APP'D
ITEM
REQ'D
PART NO
DESCRIPTION
LIST OF MATERIALS
IFR INC - WICHITA, KANSAS
MODULATION AND VOR SYSTEMS DIAGRAM
SIZE C
PART NUMBER 3-16-0338
REV
SCALE
WEIGHT
SHEET 1 OF 1

Figure 4-5

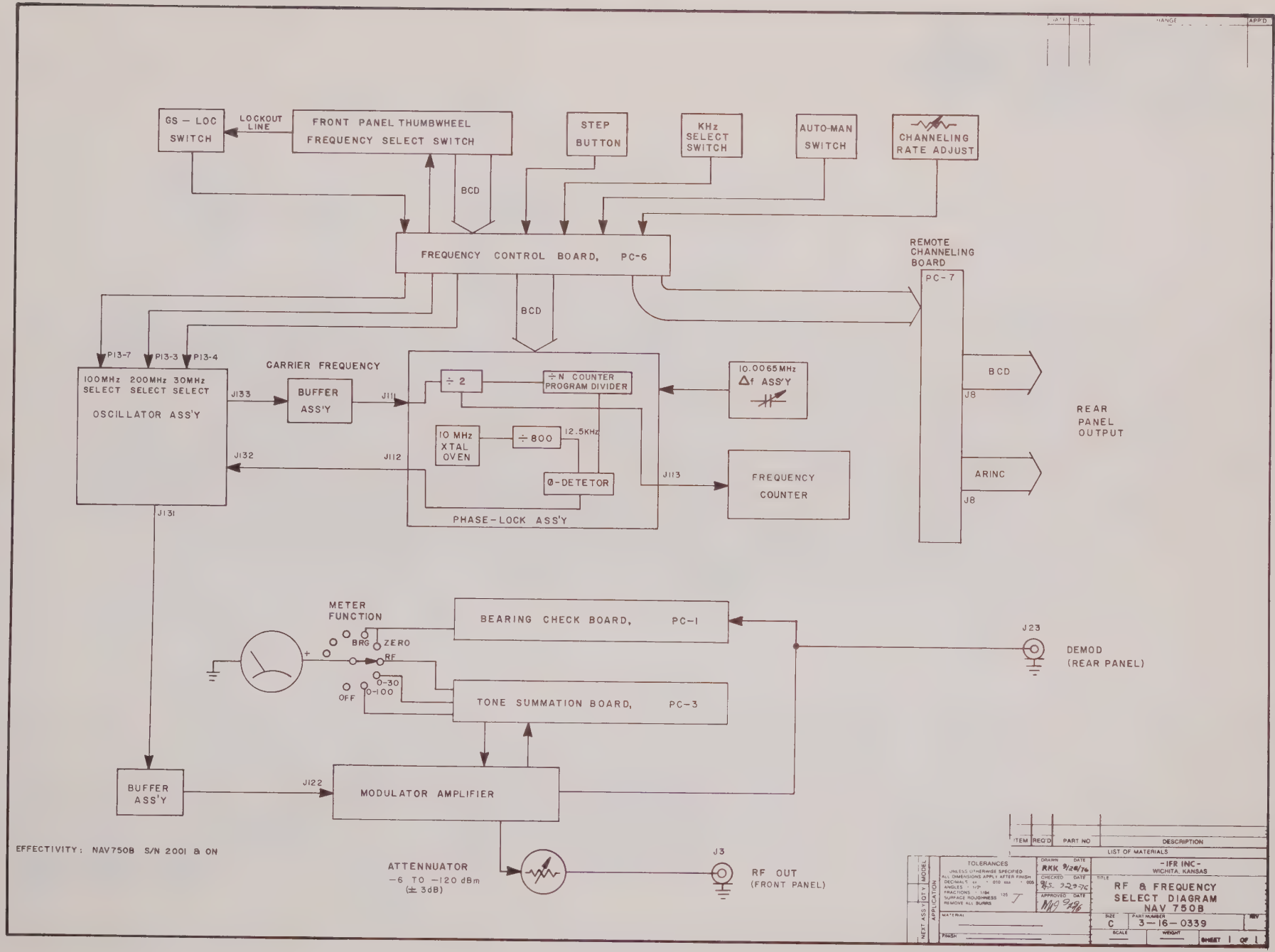
GS – LOC SWITCH
LOCKOUT LINE
FRONT PANEL THUMBWHEEL FREQUENCY SELECT SWITCH
STEP BUTTON
KHz SELECT SWITCH
AUTO-MAN SWITCH
CHANNELING RATE ADJUST
BCD
FREQUENCY CONTROL BOARD, PC-6
REMOTE CHANNELING BOARD PC-7
BCD
J8
REAR PANEL OUTPUT
ARINC
J8
P13-7
P13-3
P13-4
100MHz SELECT
200MHz SELECT
30MHz SELECT
OSCILLATOR ASS'Y
CARRIER FREQUENCY
BUFFER ASS'Y
J133
J111
÷ 2
÷N COUNTER PROGRAM DIVIDER
10.0065MHz Δf ASS'Y
10 MHz XTAL OVEN
÷ 800
12.5KHz
Ø-DETETOR
J132
J112
J113
FREQUENCY COUNTER
PHASE-LOCK ASS'Y
J131
METER FUNCTION
BRG
ZERO
RF
0-30
0-100
OFF
BEARING CHECK BOARD, PC-1
J23
DEMOD (REAR PANEL)
TONE SUMMATION BOARD, PC-3
BUFFER ASS'Y
J122
MODULATOR AMPLIFIER
ATTENNUATOR
–6 TO –120 dBm
(± 3dB)
J3
RF OUT
(FRONT PANEL)
EFFECTIVITY: NAV750B S/N 2001 & ON
ITEM
REQ'D
PART NO
DESCRIPTION
LIST OF MATERIALS
TOLERANCES
UNLESS OTHERWISE SPECIFIED
ALL DIMENSIONS APPLY AFTER FINISH
DRAWN
RMK 9/28/76
CHECKED
RLS 9-29-76
APPROVED
MAJ 9/29/76
- IFR INC -
WICHITA, KANSAS
TITLE
RF & FREQUENCY SELECT DIAGRAM
NAV 750B
SIZE
C
PART NUMBER
3-16-0339
SCALE
WEIGHT
SHEET 1 OF 1

Figure 4-6

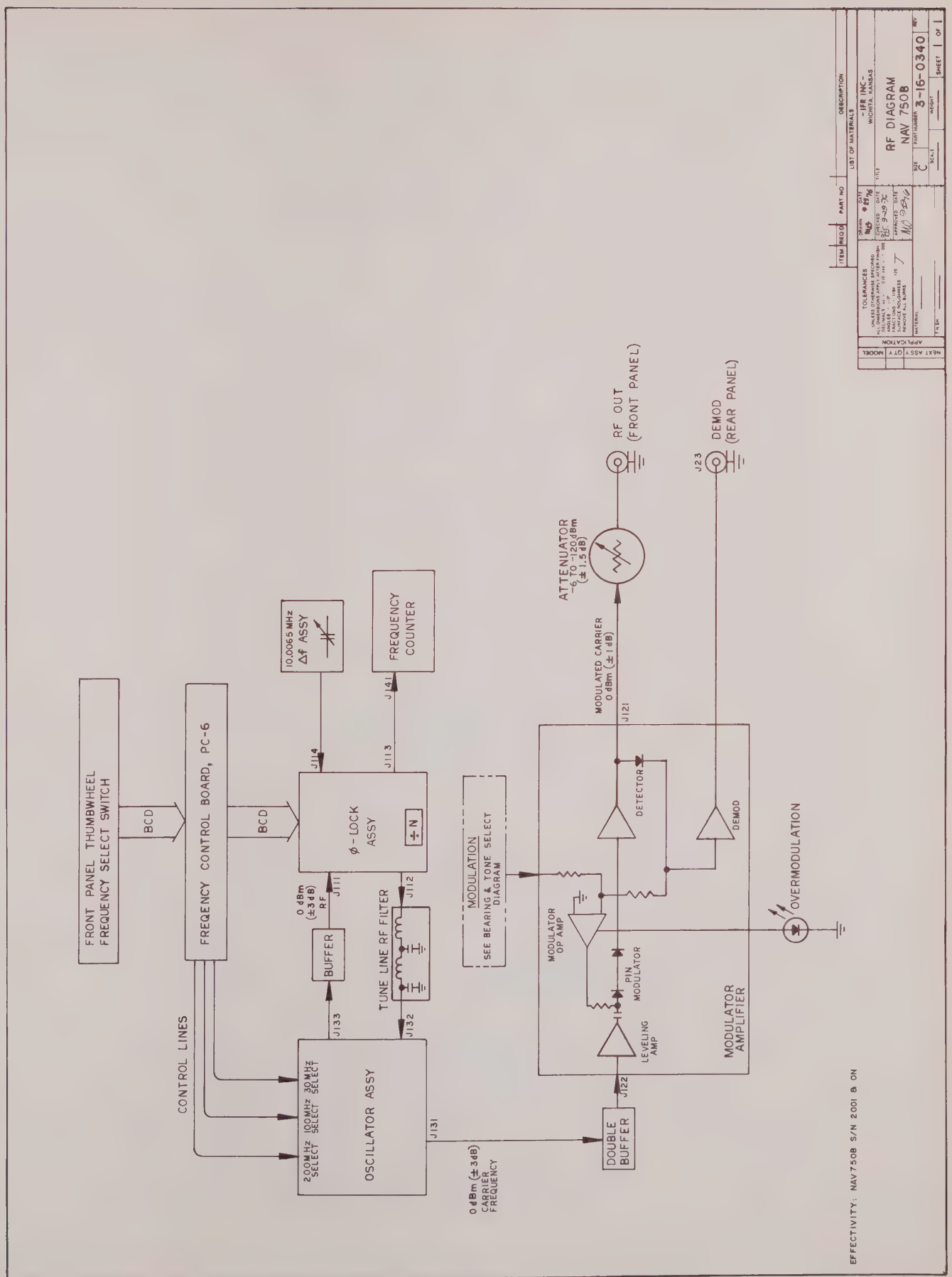
FRONT PANEL THUMBWHEEL FREQUENCY SELECT SWITCH
BCD
FREQENCY CONTROL BOARD, PC-6
BCD
10.0065 MHz Δf ASSY
FREQUENCY COUNTER
J114
J113
J141
φ-LOCK ASSY
÷N
0 dBm (±3dB) RF
J111
J112
BUFFER
TUNE LINE RF FILTER
J133
J132
CONTROL LINES
200MHz SELECT
100MHz SELECT
30MHz SELECT
OSCILLATOR ASSY
J131
0 dBm (±3dB) CARRIER FREQUENCY
DOUBLE BUFFER
J122
MODULATION
SEE BEARING & TONE SELECT DIAGRAM
MODULATOR OP AMP
PIN MODULATOR
LEVELING AMP
MODULATOR AMPLIFIER
DETECTOR
DEMOD
OVERMODULATION
MODULATED CARRIER 0 dBm (±1 dB)
J121
ATTENUATOR -6 TO -120 dBm (±1.5 dB)
RF OUT (FRONT PANEL)
J23
DEMOD (REAR PANEL)
EFFECTIVITY: NAV750B S/N 2001 & ON
ITEM
REQD
PART NO
DESCRIPTION
LIST OF MATERIALS
TOLERANCES
APPLICATION
NEXT ASSY
QTY
MODEL
-IFR INC-
WICHITA, KANSAS
RF DIAGRAM
NAV 750B
SIZE
C
PART NUMBER
3-16-0340
REV
SCALE
WEIGHT
SHEET 1 OF 1

Figure 4-7

TABLE OF CONTENTS

MAINTENANCE

SECTION V PERFORMANCE EVALUATION

		Page
5.1	Introduction.	5-1
5.2	Required Test Equipment	5-1
5.3	Performance Evaluation Tests.	5-1
5.4	Performance Evaluation Test Applicability	5-1
5.5	Test Record	5-1
5.6	Short Form Performance Tests.	5-1
5.7	Meter Mechanical Zero Check and Adjustment. . . .	5-5
5.8	Initial Proceduce	5-5
5.9	Manual Frequency Advance Test	5-6
5.10	Automatic Frequency Channeling Test	5-9
5.11	Automatic Frequency Channeling Test (Alternate Procedure Using AE-700)	5-11
5.12	Alternate Calibration and Frequency Response Test	5-14
5.13	Demod Tones and DC Offset Test.	5-16
5.14	Tone Distortion and Frequency Test.	5-19
5.15	External Modulation Test. . . . . for NAV-750 units prior to S/N 408 and NAV-750A units prior to S/N 381	5-25
5.16	External Modulation Test. . . . . for NAV-750 units S/N 408 and on, NAV-750A units S/N 381 and on, and NAV-750B units S/N 2001 and on.	5-25
5.17	VOR Bearing Generator Test.	5-26
5.18	Amplitude Modulation Depth Measurement. . . . . for VOR, LOC, G/S, and COMM Tones.	5-28

TABLE OF CONTENTS

		Page
5.18A	Amplitude Modulation Depth Measurement. . . . . Alternate procedure for VOR, LOC, G/S, and COMM Tones.	5-30
5.19	Amplitude Modulation Depth Measurement. . . . . Procedure for NAV-750B Marker Beacon Tones.	5-37
5.20	Meter Modulation Scale Test	5-38
5.21	Meter RF Level Scale Test	5-41
5.22	VOR Bearing Accuracy Test	5-42
5.23	LOC Centering Signal Test	5-44
5.24	LOC Tone Ratio Test . . . . . for NAV-750 only.	5-46
5.25	LOC Tone Ratio Test . . . . . for NAV-750A and NAV-750B only.	5-50
5.26	G/S Centering Signal Test	5-55
5.27	G/S Tone Ratio Test . . . . . for NAV-750 only.	5-57
5.28	G/S Tone Ratio Test . . . . . for NAV-750 A and NAV-750B only.	5-61
5.29	150 Hz Tone Phase Shift Test.	5-66
5.30	RF Frequency Test . . . . . (10 MHz reference oscillator check)	5-67
5.31	ΔF Operation Test	5-68
5.32	Meter Zero and Bearing Error Test	5-69
5.33	Spectral Purity Test for NAV-750.	5-73
5.34	Spectral Purity Test for NAV-750A	5-79
5.35	Spectral Purity Test for NAV-750B	5-85

TABLE OF CONTENTS

		Page
Performance Evaluation Test Data Sheet		5-91
5.36	Short Form Performance Tests for Model NAV-750, NAV-750A and NAV-750B	5-107
Short Form Performance Test Data Sheet		5-111

LIST OF FIGURES AND TABLES

Table 5-1	Required Test Equipment for Performance Evaluation Tests	5-2
Table 5-2	Support Equipment and Accessories	5-4
Figure 5-1	9960 Hz Deviation Adjustment	5-22

SECTION VI CALIBRATION

6.1	Introduction	6-1
6.2	Safety Considerations	6-1
6.3	Equipment Considerations	6-1
6.4	Environmental Considerations	6-1
6.5	Required Test Equipment	6-1
6.6	Calibration Procedure Applicability	6-1
6.7	Corrective Action	6-2
6.8	Calibration Record	6-2
6.9	Meter Mechanical Zero Check and Adjustment	6-7
6.10	Initial Procedure	6-7
6.11	Power Supply Voltage Test	6-8
6.12	Positive and Negative 11V dc Power Supply Test and Adjustment (PC-3)	6-9
6.13	Clock Oscillator (2.16 MHz) Calibration (PC-4)	6-11

TABLE OF CONTENTS

		Page
6.14	VOR, 30 Hz Ref. and 30 Hz Var. Tone. . . . . Distortion Adjustment (PC-2)	6-14
6.15	Ident (1020 Hz) and Marker Beacon. . . . . Tone Adjustments	6-16
6.16	VOR, 9960 Hz Distortion and Phase-Lock . . . . . Loop Adjustment (PC-2)	6-18
6.17	VOR, 9960 Hz Tone FM Deviation . . . . . Adjustment (PC-2)	6-20
6.18	ILS, 90 and 150 Hz Tone Distortion . . . . . Adjustment (PC-5)	6-22
6.19	VOR, Variable Bearing Control. . . . . Adjustment (PC-5)	6-24
6.20	.05° Bearing Select Adjustment (PC-5).	6-25
6.21	DC Offset Measurement and Adjustment (PC-3). . .	6-26
6.22	RF Output Level (Attenuator) Adjustment.	6-27
6.23	Meter RF Level Scale Adjustment (PC-3)	6-30
6.24	Tone Amplitude Depth and Centering . . . . . Adjustments (PC-3)	6-31
6.25	Meter Modulation Scale Calibrations (PC-3) . . .	6-36
6.26	VOR Bearing Accuracy Test.	6-37
6.27	VOR Bearing Check Board Adjustments (PC-1) . . .	6-40
6.28	10 MHz Reference Oscillator (clock). . . . . Adjustment (Phase-Lock Board)	6-43
6.29	Standard Low/High Band Oscillator. . . . . Adjustment for NAV-750 only.	6-47
6.30	Test and Alignment Procedure for 8-Step. . . . . Oscillator for NAV-750A prior to S/N 381.	6-51
6.31	Test and Alignment Procedure for . . . . . NAV-750A/B Oscillator for NAV-750A S/N 402 and on and NAV-750B S/N 2001 and on.	6-59

TABLE OF CONTENTS

		Page
6.32	Modulator Amplifier Check and Adjustments. . . . Procedure for all NAV-750 units prior to S/N 408 and NAV-750A units prior to S/N 381.	6-64
6.33	Modulator Amplifier Check and Adjustment . . . . Procedure for: NAV-750 units S/N 408 and on, NAV-750A units S/N 381 and on, and NAV-750B units S/N 2001 and on.	6-69
6.34	Performance Check of Single and Double . . . . . RF Buffer Assemblies for all NAV-750 units prior to S/N 403 and NAV-750A units prior to S/N 381.	6-71
6.35	Performance Check of Single and Double . . . . . RF Buffer Assemblies for: NAV-750 units S/N 403 and on, NAV-750A units S/N 381 and on, and NAV-750B units S/N 2001 and on.	6-72
Calibration Test Data Sheet		6-73

LIST OF FIGURES AND TABLES

Table 6-1	Required Test Equipment for. . . . . Calibration Procedures	6-3
Table 6-2	Support Equipment and Accessories.	6-5
Figure 6-1	9960 Hz Deviation Adjustment	6-21
Figure 6-2	Attenuator Assembly (Dwg. 3-16-0225)	6-28
Figure 6-3	Calibration Access (Dwg. 3-16-0237).	6-44
Figure 6-4	Standard Oscillator Calibration. . . . . Connections	6-46
Figure 6-5	8-Step Oscillator Calibration. . . . . Connections	6-52
Figure 6-6	Oscillator Calibration Connections . . . . . Effectivity: NAV-750A S/N 402 & on NAV-750B S/N 2001 & on	6-60
Figure 6-7	Modulator Amplifier Test Connections . . . . . Effectivity: Prior to NAV-750 S/N 408 Prior to NAV-750A S/N 381	6-65

TABLE OF CONTENTS

SECTION VII SEMICONDUCTOR AND IC GUIDE

		Page
7.1	Introduction.	7-1
7.2	Semiconductor Test Equipment.	7-1
7.3	Replacing Semiconductor	7-2
7.4	IC List and Circuit Functions	7-3
7.5	General Operation of Digital IC's	7-6
7.6	IC Descriptions	7-6
7.7	Operational Checking of IC's.	7-11
7.8	Digital Troubleshooting	7-14
7.9	Circuit Failures.	7-15

LIST OF FIGURES AND TABLES

Figure 7-1 TTL Signal. 7-12

Figure 7-2 Totem Pole Output Stage 7-13

Figure 7-3 Open Output Bond Illustration 7-15

Figure 7-4 Open Input Bond Illustration. 7-16

Figure 7-5 Input and Output Short Illustration 7-17

Figure 7-6 Steering Circuitry. 7-18

Figure 7-7 External Circuit Open Illustration. 7-19

Figure 7-8 Short between Gate Input Connections. 7-20
Illustration

SECTION V

PERFORMANCE EVALUATION TEST PROCEDURES

5.1 INTRODUCTION. The procedures in this section test the performance of the NAV-750 series bench test set. To ensure validity of test results, the unit under test must have a one-hour warm-up period and the line voltage must be: 117Vac nominal, ±11.7 Vac; or, when the set is so wired, 234 Vac nominal, ±16Vac.

5.2 REQUIRED TEST EQUIPMENT. Test equipment required for performance tests is listed in Table 5-1. Each test procedure specifies required test equipment.

5.3 PERFORMANCE EVALUATION TESTS. The tests in this section are suitable for inspection, troubleshooting or periodic maintenance. The tests are designed to verify specifications and should be performed in sequence. Results of each test may be recorded in the Performance Evaluation Test Data Sheet.

5.4 PERFORMANCE EVALUATION TEST APPLICABILITY. Unless otherwise specified, each test is applicable in whole, or in part as indicated, to all models of the NAV-750 bench test set. The tests are sequenced to follow a logical order of progression; however, individual tests may be used as necessary. Unless otherwise specified, verify the results of each test and take corrective action if a test requirement is not met. "Corrective Action" can mean troubleshooting to find and replace a failed component or performing a Calibration Procedure to restore the unit under test to normal operation.

5.5 TEST RECORD. Results of the performance evaluation tests may be recorded on the Performance Evaluation Test Data Sheet at the end of the test procedures. The recorded results at incoming inspection can be used for comparison in periodic maintenance, troubleshooting and during tests after repair or calibration.

5.6 SHORT FORM PERFORMANCE TESTS. The last procedure of the Performance Evaluation Test Procedures is a special purpose procedure. It is designed to validate the performance of the NAV-750 series (NAV-750, A/B) only when there has been no failure noted or calibration performed in the test set RF or modulation systems. Most steps of the procedure reference the Performance Evaluation Tests in whole or in part. A Short Form Performance Test Data Sheet is included at the end of the procedure for recording measured data.

TABLE 5-1

REQUIRED TEST EQUIPMENT FOR PERFORMANCE EVALUATION TESTS

NOTE

Minimum use specifications are the principal parameters for performance of the Performance Evaluation Tests and are included to assist in the selection of alternate test equipment. Satisfactory performance of alternate items should be verified prior to use. All applicable equipment must bear evidence of current calibration.

Item	Minimum Use Specification	Equipment
Digital Voltmeter	Minimum Resolution: 10μ Volts ac	Cimron DMM-52 or equivalent.
RF Power Meter	Power Measurement Capability: -3 dBm Accuracy: ±0.2 dB	Boonton 42 BD or equivalent
Oscilloscope	Dual trace with delayed sweep. Frequency Response: 40 MHz, minimum. Time Base Accuracy: ±3%	Dumont 1052 or equivalent
Frequency Counter	Minimum Freq. Response: 120 MHz. Minimum Sensitivity -10 dBm Minimum Time Base Accuracy: 0.000005%	Fluke 1953A w/option 20, or equivalent
Distortion Analyzer	Minimum Resolution: 0.01%	Sound Technology 1700B or equivalent
Modulation Meter	Carrier Freq. Range: 10 MHz to 1.2 GHz Sensitivity: 10mVrms from 10 MHz to 520 MHz. Input Impedance: 50 ohms, nominal Depth Accuracy: ±0.7% of reading at 20, 30, and 40% AM at tone frequency range from 30 Hz to 3 kHz.	Boonton Model 82 AD or equivalent

(cont'd next page)

TABLE 5-1 (cont'd)

REQUIRED TEST EQUIPMENT FOR PERFORMANCE EVALUATION TESTS

Item	Minimum Use Specification	Equipment
Modulation Meter (cont'd)	Detector Flatness: Indicated AM for constant % AM between 20 and 40% and frequency modulation of 90 and 150 Hz will be within ±0.4%.	
	NOTE The following items marked with * are intended for Performance Test 5.18A, AMPLITUDE MODULATION DEPTH MEASUREMENT, which is an alternate procedure to 5.18.	
* Spectrum Analyzer (with Linear detector)		HP8554L, 8552B 140T or 141T or equivalent
* Stepped Attenuator		HP355D w/opt H83
	NOTE Option H83 indicates calibration at 110.0 and 330.0 MHz with an Attenuator Calibration Chart provided	
* AC/DC Differential Voltmeter or * Digital Voltmeter		Fluke 883 AB or equivalent HP3480B/3484A or equivalent
Bearing Check Device	Minimum Bearing Check Capability: 000°, 180°, 090°, & 270°. Accuracy: ±0.02° relative to IFR Bearing Standard. Should be capable of indicating error in ±0.01° increments.	IFR, CS-360(D) or equivalent

TABLE 5-1 (cont'd)

REQUIRED TEST EQUIPMENT FOR PERFORMANCE EVALUATION TESTS

Item	Minimum Use Specification	Equipment
True RMS Voltmeter	Minimum Resolution: 10μ Volts ac	Fluke Model 931 B, Cimron DMM-52, or equivalent
Spectrum Analyzer	Freq. Range: 50 MHz to 1.2 GHz Minimum Dynamic Range: 85 dB Minimum Bandwidth: 1 kHz/Division Minimum Resolution: 300 Hz	Tektronix 7313/7L13

TABLE 5-2

SUPPORT EQUIPMENT AND ACCESSORIES

Item	Notes	Equipment
Digital Test Unit	The AE-700 Test Unit was designed to conveniently check the receiver channeling 2/5 and ARINC codes. Procedure 5.11 is an alternate procedure using the AE-700.	IFR AE-700 (P/N 1-05-0001)

5.7 METER MECHANICAL ZERO CHECK AND ADJUSTMENT

DESCRIPTION: This procedure should be performed only after the NAV-750 has been OFF for at least 30 minutes. Less off-time requires shorting meter terminals before check is made.

TEST EQUIPMENT: None

PROCEDURE:

1. Verify that front panel meter needle is at scale 0. ____(✓)

2. To adjust needle to scale 0, turn meter adjustment screw, located below center of meter, in either direction.

5.8 INITIAL PROCEDURE

DESCRIPTION: The following procedure verifies position of all NAV-750 control positions and provides for power application.

TEST EQUIPMENT: Digital Voltmeter

PROCEDURE:

1. Set NAV-750 control and switches to positions listed below:

TO-FROM bearing switch	FROM
METER FUNCTION switch	0-100 or OFF
MASTER MOD level control	CAL
1020 Hz Ident. Tone Mod level control	CAL
9960 Hz FM Tone Mod. level control	CAL
30 Hz Tone Mod. level control	CAL
.01-.05 Degree bearing select switch	.01
LOC DDM selector switch	0
LOC Variable DDM control	0
LOC-G/S Frequency selector switch	LOC
G/S DDM selector switch	0

(cont'd next page)

5.8 INITIAL PROCEDURE (cont'd)

G/S Variable DDM control. 0
FREQUENCY selector switch . . . . . 108.100 MHz
Channeling frequency increment. . . . . .25 kHz
selector switch
AUTO-MANUAL frequency control . . . . . .MANUAL
switch
CHANNELING rate control . . . . . ccw
ΔF control (variable RF . . . . . ccw
control)
BEARING- FREQ. display select. . . . . .FREQ
switch
Attenuator control. . . . . -30 dBm

2. Verify that the 50 to 400 Hz power source is 117Vac nominal ±11.7Vac (or 234Vac nominal ±16Vac) using digital voltmeter.
____Vac

3. Connect NAV-750 to power source with power cable (Standard cooling fan operates on 60 Hz power only)

4. Press LINE switch to turn set on. Allow one hour equipment warm-up time before proceeding with performance evaluation tests.

5.9 MANUAL FREQUENCY ADVANCE.

DESCRIPTION: This procedure tests the manual frequency selector system and LOC-G/S frequency pairing.

TEST EQUIPMENT: None

PROCEDURE:

1. Set controls as follows:

BEARING-FREQ. . . . . .FREQ

AUTO-MANUAL . . . . . .MANUAL

2. Set FREQUENCY selector switches to 108.100 MHz, 108.125 MHz, 108.150 MHz and 108.175 MHz and verify that frequency display is correct for each setting and that Ø LOCK indicator is on for each frequency.
____(✓)

3. Set FREQUENCY selector switches to 108.000 MHz.

(cont'd next page)

5.9 MANUAL FREQUENCY ADVANCE (cont'd)

4. While advancing the FREQUENCY selector switches to 157.950 MHz in 1 kHz steps and LOC frequencies perform the following:

   a) Check that Ø LOCK indicator is ON at all selected frequenices.
   ____(✓)

   b) Check that frequency display indicates selected frequencies.
   ____(✓)

   c) Check that VOR mode indicator is ON at VOR frequencies.
   ____(✓)

   d) Check that LOC mode indicator is ON at LOC frequencies.
   ____(✓).

   e) At each LOC frequency, momentarily place LOC-G/S frequency selector switch to G/S and verify that G/S mode indicator comes on and frequency display indicates correct paired G/S frequency according to the following list:

LOC	G/S	LOC	G/S
108.10	334.70	110.10	334.40
108.15	334.55	110.15	334.25
108.30	334.10	110.30	335.00
108.35	333.95	110.35	334.85
108.50	329.90	110.50	329.60
108.55	329.75	110.55	329.45
108.70	330.50	110.70	330.20
108.75	330.35	110.75	330.05
108.90	329.30	110.90	330.80
108.95	329.15	110.95	330.65
109.10	331.40	111.10	331.70
109.15	331.25	111.15	331.55
109.30	332.00	111.30	332.30
109.35	331.85	111.35	332.15
109.50	332.60	111.50	332.90
109.55	332.45	111.55	332.75
109.70	333.20	111.70	333.50
109.75	333.05	111.75	333.35
109.90	333.80	111.90	331.10
109.95	333.65	111.95	330.90

G/S mode indicator_____(✓) Paired frequencies____(✓)

5.9 MANUAL FREQUENCY ADVANCE (cont'd)

f) Check that END channeling indicator comes ON at 117.950 MHz, 135.975 MHz and 157.950 MHz.

____(✓)

5. Set FREQUENCY selector switches to 329.000 MHz.

6. While advancing the FREQUENCY selector switches to 335.975 MHz in 1 kHz steps, perform the following:

a) Check that Ø LOCK indicator is ON at all selected frequencies.

____(✓)

b) Check that frequency display indicates selected frequencies.

____(✓)

c) Check that END channeling indicator comes ON at 335.975 MHz.

____(✓)

NOTE

Perform the following steps for the NAV-750 B only.

7. Set FREQUENCY selector switch to 70.000 MHz.

8. While advancing the FREQUENCY selector switches to 79.975 MHz in 100 kHz steps, perform the following:

a) Check that frequency display indicates selected frequencies.

____(✓)

b) Check that Ø LOCK indicator is ON at all selected frequencies.

____(✓)

5.10 AUTOMATIC FREQUENCY CHANNELING

DESCRIPTION: The NAV-750 channeling rate is variable from 0, or "hold" position (fully ccw) of the CHANNELING rate control to maximum rate of 4 steps per second (full cw position). Channeling steps are selectable in 25 kHz, 50 kHz, 100 kHz, and 200 kHz increments. This procedure checks these functions.

TEST EQUIPMENT: None

PROCEDURE:

1. Set controls as follows:

   BEARING-FREQ. . . . . .FREQ

   CHANNELING rate control . . . . . Max ccw

   AUTO-MANUAL . . . . . .AUTO

2. Set FREQUENCY selector switches to 108.000 MHz and verify that frequency display is stable (±1 digit) and indicates 108.000 MHz.

3. Set channeling frequency increment switch to 25 kHz.

4. Adjust CHANNELING rate control clockwise until audio pulse is heard.

5. Verify that frequency display increases in 25 kHz increments.

   ____(✓)

6. Adjust CHANNELING rate control fully counter-clockwise (CHANNELING hold) amd verify that channeling stops.

   ____(✓)

7. Repeat steps 5 and 6 for 50 kHz, 100 kHz, and 200 kHz positions of the frequency increment switch.

   ____(✓)

8. Adjust CHANNELING rate control fully clockwise and verify that rate is not more than 4 steps per second. (Count audible pulses in ten second period and divide total by ten).

   ____(4 per sec. or less)

9. Set AUTO-MANUAL switch to MANUAL position.

10. Set frequency increment switch to 100 kHz position.

(cont'd next page)

5.10 AUTOMATIC FREQUENCY CHANNELING (cont'd)

11. Set AUTO-MANUAL switch to AUTO position and verify that frequency display indicates 100 kHz channeling at maximum channeling rate.

____(✓)

12. Verify that channeling stops at 117.950 MHz and END channeling indicator comes ON.

____(✓)

13. Set FREQUENCY selector switches to 118.000 MHz.

14. Momentarily position AUTO-MANUAL switch to MANUAL.

15. When AUTO-MANUAL switch is returned to AUTO, channeling will continue.

16. Verify that channeling stops at 135.975 MHz and END channeling indicator comes ON.

____(✓)

17. Set FREQUENCY selector switches to 136.000 MHz.

18. Momentarily position AUTO-MANUAL switch to MANUAL.

19. When AUTO-MANUAL switch is returned to AUTO, channeling will continue.

20. Verify that channeling stops at 157.950 MHz and END channeling indicator comes ON.

____(✓)

21. Set FREQUENCY selector switches to 329.000 MHz.

22. Momentarily position AUTO-MANUAL switch to MANUAL.

23. When AUTO-MANUAL switch is returned to AUTO, channeling will continue.

24. Verify that channeling stops at 335.975 MHz and END channeling indicator comes ON.

25. Adjust CHANNELING rate control fully counterclock-wise and note that channeling stops. ____(✓)

26. Set AUTO-MANUAL switch to MANUAL.

27. Verify that CHANNELING and END channeling indicators are OFF and frequency display is 329.000 MHz.

____(✓)

5.11 AUTOMATIC FREQUENCY CHANNELING (Alternate Procedure using AE-700)

DESCRIPTION: The NAV-750 remote channeling function provides ARINC 2/5 and BCD codes for output frequencies in tens, units, tenths and hundredths of megahertz intervals from 108.000 MHz to 157.950 MHz. Hundreds of MHz intervals are in 25 kHz steps. The AE-700 Accessory Test Box is designed to select and display the ARINC 2/5 or BDC code. The selected code is displayed in two forms simultaneously: a decoded digital frequency display and a four column code light display aligned vertically under the corresponding digit. This procedure provides for checking the ARINC 2/5 and BCD codes, automatic channeling, stop points and remote channeling.

TEST EQUIPMENT: AE-700 Accessory Test Box

PROCEDURE:

1. Set controls as follows:

   AUTO-MANUAL. . . . . MANUAL

   CHANNELING rate control. . . . . .Max ccw

   BEARING-FREQ. . . . . FREQ

2. Connect AE-700 cables to NAV-750 rear panel connectors J8 and J10.

3. Set AE-700 2/5-BCD switch to BCD.

4. Set NAV-750 FREQUENCY selector switches to 108.000 MHz and verify that frequency display is stable (±1 digit) and indicates 108.000 MHz.

5. Verify that AE-700 frequency display and code display indicate 108.000 MHz.

6. Adjust NAV-750 CHANNELING rate control fully counter clock-wise (CHANNELING hold).

7. Set NAV-750 AUTO-MANUAL switch to AUTO position and verify that CHANNELING indicator is ON.

8. Set a channeling frequency increment switch to 25 kHz.

9. Press AE-700 REMOTE channeling step switch several times and verify that NAV-750 frequency display increases in 25 kHz steps.

____(✓)

(cont'd next page)

5.11 AUTOMATIC FREQUENCY CHANNELING (cont'd)
(Alternate Procedure using AE-700)

10. Verify that AE-700 frequency and code display follow NAV-750 display.

____(✓)

11. Momentarily place AUTO-MANUAL switch to MANUAL and verify that all frequency displays return to 108.000 MHZ.

12. Adjust CHANNELING rate control clockwise until audio channeling pulse is heard.

13. Verify that NAV-750 and AE-700 frequency displays increase in 25 kHz increments.

____(✓)

14. Adjust CHANNELING rate control fully counterclock-wise and verify that channeling stops.

____(✓)

15. Repeat steps 12 and 13 for 50 kHz, 100 kHz and 200 kHz positions of the frequency increment switch.

50____(✓)
100____(✓)
200____(✓)

16. Adjust CHANNELING rate control fully clockwise and verify that rate is not more than 4 steps per second. (Count audible pulses in ten second period and divide total by ten).

____(4 per sec. or less).

17. Set AUTO-MANUAL switch to Manual position.

18. Set frequency increment switch to 100 kHz position.

19. Set AUTO-MANUAL switch to AUTO position.

20. Adjust CHANNELING rate control for a convenient rate.

21. Verify that BCD code is correct at each frequency until channeling stops.

____(✓)

22. Verify that channeling stops at 117.950 MHz and END channeling indicators on NAV-750 and AE-700 come ON.

____(✓)

23. Set AUTO-MANUAL switch to MANUAL.

(cont'd next page)

5.11 AUTOMATIC FREQUENCY CHANNELING (cont'd)
(Alternate Procedure using AE-700)

24. Set FREQUENCY selector switch to 118.000 MHz.

25. Set AUTO-MANUAL switch to AUTO, channeling will continue. Repeat step 21.

26. Verify that channeling stops at 135.975 MHz and END channeling indicators on NAV-750 and AE-700 come ON.

____(✓)

27. Set AUTO-MANUAL switch to MANUAL.

28. Set FREQUENCY selector switches to 136.000 MHz.

29. Set AUTO-MANUAL switch to AUTO, channeling will continue. Repeat step 21.

____(✓)

30. Verify that channeling stops at 157.950 MHz and END channeling indicators on NAV-750 and AE-700 come ON.

____(✓)

31. Set AUTO-MANUAL switch to MANUAL.

32. Set FREQUENCY selector switches to 108.000 MHz.

33. Verify that NAV-750 and AE-700 frequency displays indicate 108.000 MHz.

____(✓)

34. Set AE-700 2/5-BCD switch to 2/5.

35. Repeat steps 4 through 33 for ARINC 2/5 code.

ARINC 2/5 code____(✓)

5.12 ATTENUATOR CALIBRATION AND FREQUENCY RESPONSE TEST

DESCRIPTION: This procedure verifies the calibration and frequency response of the output attenuator at -30 dBm at all frequencies by measuring the RF output with a power meter.

SPECIFICATIONS: ±1.5 dBm at -30 dBm

TEST EQUIPMENT: RF Power Meter

PROCEDURE:

1. Set controls as follows:

   FREQUENCY . . . . . .108.000 MHz

   MASTER MOD. . . . . .UNCAL Max ccw (0)

   Output Attenuator . . . . . .-30 dBm

2. Connect RF Power meter to NAV-750 RF Power output connector (J3).

3. Verify that the RF Power meter indication is -30 dBm (±1.5 dBm).

4. Advance FREQUENCY selector switches to 157.000 MHz in 1 MHz steps and verify that power meter indicates -30 dBm (±1.5 dBm).

   -31.5 dBm____-28.5 dBm

5. Set FREQUENCY selector switches to 328.000 MHz and verify that G/S mode indicator is ON.

6. Advance FREQUENCY selector switches to 335.000 MHz in 1 MHz steps and verify that power meter indicates -30 dBm (±1.5 dBm).

   -31.5 dBm____-28.5 dBm

(cont'd next page)

5.12 ATTENUATOR CALIBRATION AND FREQUENCY RESPONSE TEST (cont'd)

PROCEDURE:

NOTE

Perform the following steps for the NAV-750 only.

7. Set FREQUENCY selector switches to 70.000 MHz.

8. Advance FREQUENCY selector switches to 79.000 MHz in 1 MHz steps and verify that power meter indication is -30 dBm (±1.5 dBm).

-31.5 dBm____-28.5 dBm

5.13 DEMOD TONES AND DC OFFSET

DESCRIPTION: This procedures verifies that correct tones are present at the DEMOD jack (J23) with an oscilloscope. DC offset is measured with a DVM at the TONES jack (J21).

SPECIFICATION: DC offset voltage at LOC, GS, and COMM frequencies should be less than ±40mV dc. DC offset voltage at MKR BEACON frequencies (NAV-750B only) should be less than ±80mV dc.

TEST EQUIPMENT: Digital Voltmeter
Oscilloscope

PROCEDURE:

1. Set controls as follows:

   BEARING-FREQ. . . . . .FREQ

   30 Hz . . . . . CAL

   9960 Hz . . . . . CAL

   1020 Hz . . . . . CAL

   MASTER MOD. . . . . CAL

   LOC DDM selector switch 0

   G/S DDM selector switch 0

2. Connect oscilloscope vertical input to NAV-750 rear panel DEMOD jack (J23).

3. Connect digital voltmeter (DVM) to NAV-750 rear panel TONES jack (J-21)

   NOTE

   The tone waveshapes at the rear panel TONES jack (J21) are the same, except inverted, as those at the DEMOD jack (H23).

4. Set FREQUENCY selector switches to 108.100 MHz verify that the frequency display is 108.100 MHz, and the LOC mode indicator is ON.

(cont'd next page)

5.13 DEMOD TONES AND DC OFFSET (cont'd)

5. Set G/S DDM selector switch to 90Hz and verify that the 150 Hz tone off indicator is ON.

6. Verify that the oscilloscope displays 90 Hz tone.

____(✓)

7. The DVM should indicate less than ±40mV dc.

-40mVdc____+40mV dc

8. Set the LOC-G/S frequency selector switch to G/S and verify that frequency display is 334.70 MHz and G/S mode indicator is ON.

9. Oscilloscope should display 90 Hz tone.

____(✓)

10. DVM should indicate less than ±40mV dc.

-40mVdc____+40mVdc

11. Set G/S DDM selector switch to 150 Hz and verify that 90 Hz tone off indicator is ON.

12. Oscilloscope should display 150 Hz tone.

____(✓)

13. DVM should indicate less than ±40mV dc.

-40mV dc____+40mV dc

14. Set LOC-G/S frequency selector switch to LOC and verify that the 90 Hz tone off indicator is ON, the frequency display is 108.100 MHz, and the LOC mode indicator is ON.

15. Oscilloscope should display 150 Hz tone.

____(✓)

16. DVM should indicate less than ±40mV dc.

-40mV dc____+40mV dc

17. Set G/S DDM selector switch to 0 and verify that both tone off indicators are OFF.

18. Set FREQUENCY selector switches to 108.000 MHz and verify that VOR mod indicator is ON.

19. Oscilloscope should display 9960 Hz tone, frequency and amplitude modulated with 30 Hz tone.

____(✓)

(cont'd next page)

5.13 DEMOD TONES AND DC OFFSET (cont'd)

20. DVM should indicate less than ±40mV dc.
-40mV dc____+40mV dc

21. Adjust 9960 FM tone modulation level control to uncal fully ccw (0) position and verify that 9960 UNCAL indicator is ON.

22. Oscilloscope should display 30 Hz tone.
____(✓)

23. DVM should indicate less than ±40mV dc.
-40mV dc____+40mV dc

24. Set 9960 FM tone modulation level control to CAL position and verify that 9960 UNCAL indicator is OFF.

25. Set FREQUENCY selector switches to 118.000 MHz.

26. Oscilloscope should display 1020 Hz tone.
____(✓)

27. DVM should indicate less than ±40mV dc.
-40mV dc____+40mV dc

NOTE

Perform the following steps for the NAV-750B only.

28. Set meter function and tone selector switch to 400 Hz.

29. Oscilloscope should display 400 Hz tone.
____(✓)

30. DVM should indicate less than ±80mV dc.
-80mV dc____+80mV dc

31. Set meter function and tone selector switch to 1300 Hz.

32. Oscilloscope should display 1300 Hz tone.
____(✓)

33. DVM should indicate less than ±80mV dc.
-80mV dc____+80mV dc

34. Set meter function and tone selector switch to 3000 Hz.

(cont'd next page)

5.13 DEMOD TONES AND DC OFFSET (cont'd)

35. Oscilloscope should display 3000 Hz tone.

____(✓)

36. DVM should indicate less than ±80mV dc.

-80mV dc____+80mVdc

5.14 TONE DISTORTION AND FREQUENCY

DESCRIPTION: This procedure verifies tone frequency and distortion specifications. The 30Hz reference, 30Hz variable, 90Hz and 150 Hz tones and digitally derived from the 2.16 MHz crystal controlled oscillator and therefore reflect the accuracy of the oscillator. The 9960 Hz tone, frequency modulated with the 30 Hz reference tone, is checked for frequency and modulation in this procedure. Distortion of 9960 Hz cannot be checked directly without removing the 30 Hz FM signal which requires opening the set to gain access to the 30 Hz sine board. However, the 9960 Hz tone distortion specifications are verified in the VOR bearing check procedure since an out-of-tolerance 9960 Hz distortion condition will result in unacceptable VOR bearing errors. Both 9960 Hz tone distortion and frequency adjustments are located on PC-2. Adjusting the frequency of the 2.16 MHz oscillator on PC-4 also sets the frequency of the 30 Hz REF, 30 Hz VAR, 90 Hz and 150 Hz tones. Distortion adjustments for the 90 Hz and 150 Hz tones are located on PC-5. All remaining tone distortion and frequency adjustments are located on PC-2.

SPECIFICATIONS:

TONE	DISTORTION	FREQUENCY
30 Hz REF.	0.5% Max.	±0.02%
30 Hz VAR	0.5% Max.	±0.02%
90 Hz	0.4% Max.	±0.02%
150 Hz	0.4% Max.	±0.02%
9960 Hz	1.3% Max.	±0.02%
9960 Hz Deviation	(FM at 30 Hz)	48.5µs(±2.4µs)
400 Hz	0.7% Max.	±0.7%
1300 Hz	0.7% Max.	±0.7%
3000 Hz	0.7% Max.	±0.7%
1020 Hz	0.5% Max.	±0.5%

(cont'd next page)

5.14 TONE DISTORTION AND FREQUENCY (cont'd)

TEST EQUIPMENT: Frequency Counter
Distortion Analyzer
Oscilloscope

PROCEDURE:

1. Set controls as follows:

   BEARING-FREQ. . . . . .FREQ

   30 Hz . . . . . CAL

   9960 Hz . . . . . CAL

   1020 Hz . . . . . CAL

   MASTER MOD. . . . . CAL

   LOC DDM selector switch 0

   G/S DDM selector switch 0

2. Connect the distortion analyzer to the NAV-750 rear panel 30 Hz REF. jack (J22).

3. Distortion analyzer should indicate not more than 0.5% total harmonic distortion.

   0%____0.5%

4. Disconnect distortion analyzer and connect frequency counter to 30 Hz REF jack (J22).

5. Frequency counter should indicate 30 Hz (±0.006Hz).

   29.994Hz____30.006Hz

6. Disconnect distortion analyzer from 30 Hz REF jack (J22).

7. Set FREQUENCY selector switches to 108.100 MHz and verify frequency display is 108.100 MHz.

8. Set G/S DDM selector switch to 90 Hz and verify that the 150 Hz tone off indicator is ON.

9. Connect the distortion analyzer to the rear panel TONES jack (J21).

(cont'd next page)

5.14 TONE DISTORTION AND FREQUENCY (cont'd)

PROCEDURE:

10. Connect the frequency counter to the rear panel DEMOD jack (J23).

11. Distortion analyzer should indicate not more than 0.4% total harmonic distortion at 90 Hz.

0%____0.4%

12. Frequency counter should indicate 90Hz (±0.018Hz).

89.982Hz____90.018Hz

13. Set the LOC-G/S frequency selector switch to G/S and verify that frequency display is 334.70MHz.

14. Distortion analyzer should indicate not more than 0.4% total harmonic distortion at 90 Hz.

0%____0.4%

15. Frequency counter should indicate 90Hz (±0.018Hz).

89.982Hz____90.018Hz

16. Set G/S DDM selector switch to 150 Hz and verify that 90 Hz tone off indicator is ON.

17. Distortion analyzer should indicate not more than 0.4% total harmonic distortion at 150 Hz.

0%____0.4%

18. Frequency counter should indicate 150Hz (±0.03Hz)

149.97Hz____150.03Hz

19. Set LOC-G/S frequency selector switch to LOC and verify that the 90Hz tone off indicator is ON and frequency display is 108.100 MHz.

20. Distortion analyzer should indicate not more than 0.4% total harmonic distortion at 150 Hz.

0%____0.4%

21. Frequency counter should indicate 150Hz (±0.03Hz).

149.97Hz____150.03Hz

(cont'd next page)

FM Deviation; ±480(±24)Hz

SCOPE SETTINGS

Vertical:
200mV/Div-Uncal

Horizontal:
Main Time Base
100µs/Div

Trigger:
Positive Slope

NOTE

Accuracy of calibration depends on oscilloscope sweep timing accuracy.

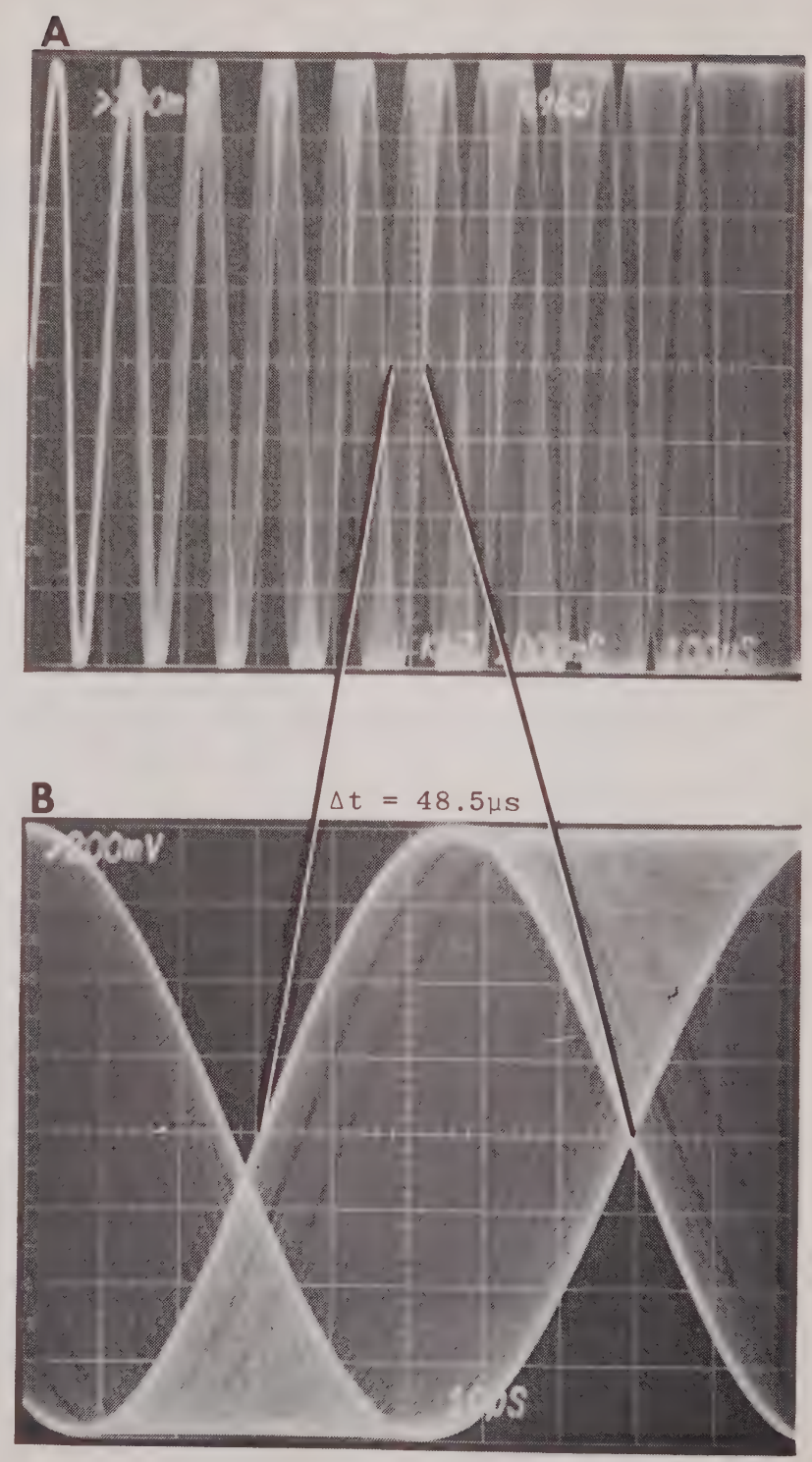

SCOPE SETTINGS

Vertical:
200mV/Div-Uncal

Horizontal:
Delay Time Base
10µs/Div

Trigger:
Positive Slope

Figure 5-1. 9960 Hz Deviation Adjustment

5.14 TONE DISTORTION AND FREQUENCY (cont'd)

PROCEDURE:

22. Disconnect distortion analyzer and connect vertical input of oscilloscope to rear panel TONES jack (J21).

23. Set FREQUENCY selector switches to 108.000 MHz and verify that VOR mode indicator is ON.

24. Adjust 30 Hz tone modulation level control to uncal fully ccw position and verify that 30 Hz UNCAL indicator is ON.

25. Adjust oscilloscope trigger and position controls to vertically center the 9960 Hz display and position the sweep trigger point at the left edge of the horizontal centerline as shown in Figure 5-1(A).

26. Set oscilloscope controls as specified in Figure 5-1(B).

27. Deviation (Δt) in expanded display (see Figure 5-1(B)). at the end of the 5th cycle measured at vertical zero (horizontal centerline) should be 48.5µs (±2.4µs).

46.1µs____50.9µs

28. Frequency counter should indicate 9960Hz (±1.992Hz).

9958.008Hz____9961.992Hz

29. Disconnect oscilloscope and connect distortion analyzer to rear panel TONES jack (J21).

30. Adjust 9960 FM tone modulation level control to uncal fully ccw (0) position and verify that 9960 Hz UNCAL indicator is ON.

31. Set 30 Hz tone modulation level control to CAL position and verify that 30 Hz UNCAL indicator is OFF.

32. Distortion analyzer should indicate not more than 0.5% total harmonic distortion at 30 Hz.

0%____0.5%

33. Frequency counter should indicate 30Hz (±0.006Hz).

29.994Hz____30.006Hz

34. Set 9960 FM tone modulation level control to CAL position and verify that 9960 Hz UNCAL indicator is OFF.

(cont'd next page)

5.14 TONE DISTORTION AND FREQUENCY (cont'd)

PROCEDURE:

35. Set FREQUENCY selector switches to 118.000 MHz.

36. Distortion analyzer should indicate not more than 0.5% total harmonic distortion at 1020 Hz.

0%____0.5%

37. Frequency counter should indicate 1020Hz (±5.1Hz).

1014.9Hz____1025.1Hz

NOTE

Perform the following steps for the NAV-750 B only.

38. Set FREQUENCY selector switches to 75.000 MHz.

39. Set meter function and tone selector switch to 400 Hz.

40. Distortion analyzer should indicate not more than 0.7% total harmonic distortion at 400 Hz.

0%____0.7%

41. Frequency counter should indicate 400Hz (±2.8Hz).

497.2Hz____402.8Hz

42. Set meter function and tone selector switch to 1300Hz.

43. Distortion analyzer should indicate not more than 0.7% total harmonic distortion at 1300 MHz.

0%____0.7%

44. Frequency counter should indicate 1300Hz (±9.1Hz).

1290.9Hz____1309.1HZ

45. Set meter function and tone selector switch to 3000 Hz.

46. Distortion analyzer should indicate not more than 0.7% total harmonic distortion at 3000Hz.

0%___0.7%

47. Frequency counter should indicate 3000Hz (±21Hz).

2779.0Hz____3021Hz

5.15 EXTERNAL MODULATION

DESCRIPTION: This procedure verifies correct operation of the external modulation circuitry. Procedure effectivity is:

NAV-750 units prior to S/N 408.
NAV-750A units through S/N 380

TEST EQUIPMENT: None

PROCEDURE:

1. Set controls as follows:

   FREQUENCY. . . . . .108.000 MHz

   9960 Hz. . . . . UNCAL Max. ccw (0)

   MASTER MOD . . . . . .CAL

   Meter Function switch. 0-30

2. Connect 30 Hz REF jack (J22) to EXT MOD jack (J18) with BNC cable.

3. Meter should indicate between 28.5% and 31.5%.

   28.5%____31.5%

5.16 EXTERNAL MODULATION

DESCRIPTION: This procedure verifies correct operation of the external modulation circuitry. Procedure effectivity is:

NAV-750 units S/N 408 & on
NAV-750A units S/N 381 & on
NAV-750B units S/N 2001 & on

TEST EQUIPMENT: None

(cont'd next page)

5.16 EXTERNAL MODULATION (cont'd)

PROCEDURE:

1. Set controls as follows:

   FREQUENCY. . . . . .108.000 MHz

   9960 Hz. . . . . UNCAL Max. ccw (0)

   MASTER MOD . . . . . .CAL

   Meter Function Switch. 0-100

2. Connect 30 Hz REF jack (J22) to EXT MOD jack (J18) with BNC cable.

3. Meter should indicate between 85.5% and 94.5%.

   85.5%____94.5%

5.17 VOR BEARING GENERATOR

DESCRIPTION: This procedure verifies the operation of the bearing generator system

TEST EQUIPMENT: None

PROCEDURE:

1. Set controls as follows:

   FREQUENCY. . . . . .108.000 MHz

   BEARING-FREQ . . . . . .BEARING

   30 Hz. . . . . .CAL

   9960 Hz. . . . . .CAL

   1020 Hz. . . . . .CAL

   MASTER MOD . . . . . .CAL

   kHz - 0.1 kHz. . . . . .kHz

2. Verify that VOR mode indicator is ON.

(cont'd next page)

5.17 VOR BEARING GENERATOR (cont'd)

3. Press 0° VOR bearing select pushbutton switch and verify that display indicates 0.00 degrees.

____(✓)

4. Repeat step 3 for each VOR bearing select pushbutton and verify that display indicates the selected bearing.

____(✓)

5. Press the +10° pushbutton switch and verify that bearing display increased 10° each time the pushbutton is pressed.

____(✓)

6. Press -10° pushbutton switch and verify that bearing display decreases 10° each time pushbutton is pressed.

____(✓)

7. Place .01/.05 degree variable bearing select switch to .01 position.

8. Rotate variable BEARING control clockwise and counter-clockwise while monitoring bearing display.

9. Verify that bearing display increases in .01° increments as BEARING control is rotated clockwise and decreases in .01° increments with counterclockwise rotation of the BEARING control.

____(✓)

10. Place .01/.05 degree variable bearing select switch to .05 position.

11. Repeat step 8 to verify .05 degree incremental bearing display changes.

____(✓)

5.18 AMPLITUDE MODULATION DEPTH MEASUREMENT

DESCRIPTION: Using a modulation meter, this procedure measures the amplitude modulation depth at each tone frequency generated by the NAV-750 except at marker beacon tone frequencies generated in the NAV-750B.

SPECIFICATIONS:

TONE	% MODULATION
VOR 30 Hz	30(±1.2)%
VOR 9960 Hz	30(±1.2)%
LOC 90 Hz	20(±0.8)%
LOC 150 Hz	20(±0.8)%
G/S 90 Hz	40(±1.6)%
G/S 150 Hz	40(±1.6)%
Comm 1020 Hz	30(±1.2)%

TEST EQUIPMENT: Modulation Meter

PROCEDURE:

1. Set controls as follows:

   FREQUENCY. . . . . 108.000 MHz

   METER FUNCTION switch. 0-100

   9960 Hz. . . . . .UNCAL Max. ccw (0)

   30 Hz. . . . . CAL

   1020 Hz. . . . . CAL

   MASTER MOD . . . . . CAL

   Output Attenuator. . . . . .-7 dBm

VOR (30Hz TONE)

2. Connect modulation meter to NAV-750 RF output connector J3 and set modulation meter to indicate modulation percentage.

3. Modulation meter should indicate 30(±1.2)%.
   28.8%____31.2%

4. Adjust 9960 Hz tone modulation level control to CAL and verify that 9960 UNCAL indicator is OFF.

(cont'd next page)

5.18 AMPLITUDE MODULATION DEPTH MEASUREMENT (cont'd)

PROCEDURE:

VOR (9960 Hz TONE)

5. Adjust 30 Hz tone modulation level control to uncal full ccw (0) and verify that 30 Hz tone UNCAL indicator is ON.

6. Modulation meter should indicate 30(±1.2)%.
28.8%____31.2%

7. Adjust 30 Hz tone modulation level control to CAL and verify that 30 Hz tone UNCAL indicator is OFF.

LOC (90 Hz TONE)

8. Set NAV-750 FREQUENCY selector switches to 108.100 MHz and verify that LOC mode indicator is ON.

9. Set G/S DDM selector switch to 90 Hz and verify that 150 Hz tone off indicator is ON.

10. Modulation meter should indicate 20(±0.8)%.
19.2%____20.8%

LOC (150 Hz TONE)

11. Set G/S DDM selector switch to 150 Hz and verify that 150 Hz tone off indicator is OFF and 90 Hz tone off indicator is ON.

12. Modulation meter should indicate 20(±0.8)%.
19.2%____20.8%

13. Set G/S DDM selector switch to 0 and verify that both tone off indicators are OFF.

G/S (90 Hz TONE)

14. Set LOC-G/S frequency selector switch to G/S and verify that G/S mode indicator is ON.

15. Set LOC DDM selector switch to 90 Hz and verify that 150 Hz tone off indicator is ON.

16. Modulation meter should indicate 40(±1.6)%
38.4%____41.6%

G/S (150 Hz TONE)

17. Set LOC DDM selector switch to 150 Hz and verify that 90 Hz tone off indicator is ON.

(cont'd next page)

5.18 AMPLITUDE MODULATION DEPTH MEASUREMENT (cont'd)

PROCEDURE:

18. Modulation meter should indicate 40(±1.4)%.
38.4%____41.6%

19. Set LOC DDM selector switch to 0 and verify that both tone off indicators are OFF.

COMM (1020 Hz TONE)

20. Set NAV-750 FREQUENCY selector switches to 118.000 MHz.

21. Modulation meter should indicate 30(±1.2)%.
28.8%____31.2%

5.18A AMPLITUDE MODULATION DEPTH MEASUREMENT
(Alternate Method)

DESCRIPTION: This procedure is used to accurately determine the depth of amplitude modulation (internal) of the NAV-750 generated signal in the VOR, LOC, COMM, and G/S frequency ranges. Measurements are made of both the ac and the dc components of the signal at the output of a Spectrum Analyzer linear peak detector with the Analyzer set to a zero frequency span. The dc offset (V off) at the output of the detector is measured, and a correction is made in the calculation for this offset voltage.

Possibilities for error in this measurement exist in the uncertainty of attenuator accuracy and the measurement of the ac and dc voltages. Use of the HP 335D OPT H83 is specified here because of the Calibration Charts provided for 110 MHz and 330 MHz; and the opportunity, therefore, to correct calculations involving α (attenuation) accordingly. The voltmeter used should have a known accuracy of better than ±0.1%. Using test equipment specified within (or equivalent), accuracies of the measurement using this procedure are better than ±1.0% of the resultant calculated value.

i.e., A resultant calculated value of 30.0%, measured using this procedure, has an absolute value between 29.7% and 30.3%.

(cont'd next page)

5.18A AMPLITUDE MODULATION DEPTH MEASUREMENT (Cont'd)
(Alternate Method)

SPECIFICATIONS:

TONE	% MODULATION
VOR 30 Hz	30(±1.2)%
VOR 9960 Hz	30(±1.2)%
LOC 90 Hz	20(±0.8)%
LOC 150 Hz	20(±0.8)%
G/S 90 Hz	40(±1.6)%
G/S 150 Hz	40(±1.6)%
Comm 1020 Hz	30(±1.2)%

TEST EQUIPMENT:

Spectrum Analyzer (with linear detector) . . . . . HP8554L, 8552B 140T or 141T

Stepped Attenuator . . . . . .HP355D OPT H83*

AC/DC Differential Voltmeter . . .Fluke 883AB or equivalent

OR

Digital Voltmeter . . . . . .HP3480B/3484A or equivalent

*H83 option indicates calibration at 110.0 and 330 MHz with Attenuator Calibration Chart provided.

NOTE

If V_{off} for the Analyzer being used has recently been measured and noted, omit step 5 and eliminate the calibrated attenuator from the test setup. A two hour equipment warm-up time should be allowed to minimize drift of the Spectrum Analyzer detector output.

(cont'd next page)

5.18A AMPLITUDE MODULATION DEPTH MEASUREMENT (cont'd)

PROCEDURE:

1. Connect the test equipment and the NAV-750 as shown below:

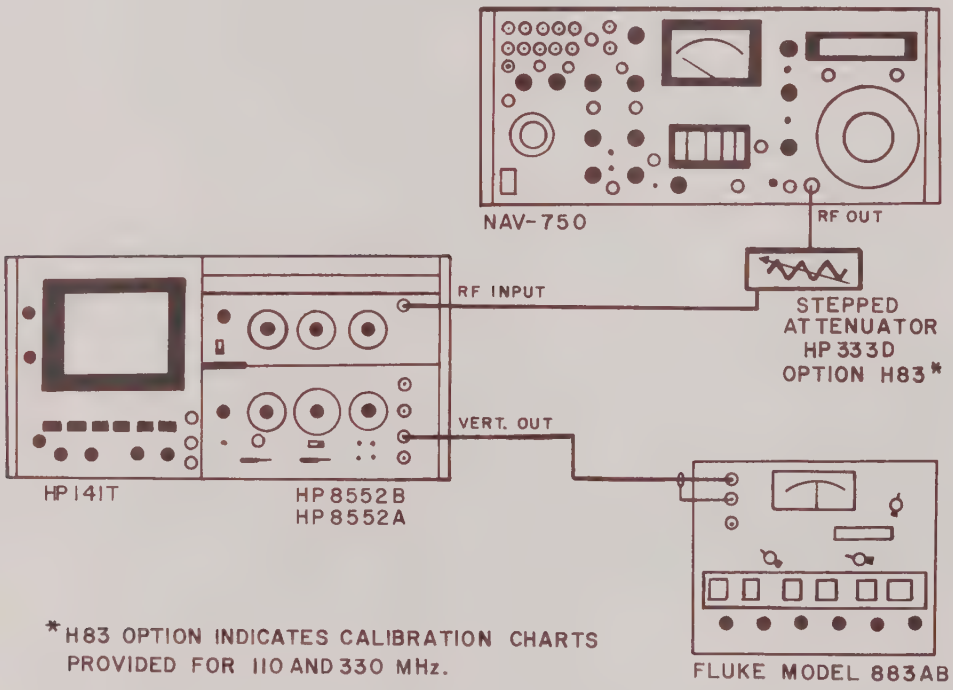

*H83 OPTION INDICATES CALIBRATION CHARTS PROVIDED FOR 110 AND 330 MHz.

2. Set NAV-750 controls as follows:

Meter Function Switch. 0-100

FREQUENCY. . . . . .108.0 MHz

MASTER MOD control . . . . . .CAL

9960 Hz. . . . . UNCAL Max. ccw

1020 Hz. . . . . .CAL

30 Hz. . . . . .CAL

Output Attenuator. . . . . .-20 dBm

LOC-G/S Frequency Selector Switch. . . . . .LOC

(cont'd next page)

5.18A AMPLITUDE MODULATION DEPTH MEASUREMENT (cont'd)

PROCEDURE:

3. Set spectrum analyzer controls as follows:

BANDWIDTH. . . . . .300 kHz

SCAN WIDTH . . . . . .2 MHz/Div

TUNING STABILIZER. . . . . ON

INPUT ATTENUATOR 10dB

FREQUENCY. . . . . .As required to center 108.0 MHz signal trace on display

SCALE. . . . . LINEAR

LINEAR SENSITIVITY 10mV/DIV

4. Peak the trace on the display with the center frequency controls. Reset spectrum analyzer controls as follows:

Frequency Span (SPAN WIDTH). . . . . ZERO

VIDEO FILTER . . . . . .OFF

NOTE

If V_{off} for the Analyzer being used has recently been measured and noted, omit step 5.

5. Perform the V_{off} measurement as follows:

NOTE

A correction factor equal to the Spectrum Analyzer's dc offset (V off) is used in this procedure to compensate for the dc offset at the output of the detector. Measurement of this offset voltage is accomplished in the following step, and MUST be performed to insure the accuracy of this test.

a) Verify NAV-750 controls are set as outlined in step 2.

b) Set NAV-750 MASTER MOD control to UNCAL Max ccw (0).

c) Set HP355D stepped Attenuator to 0dB.

(cont'd next page)

5.18A AMPLITUDE MODULATION DEPTH MEASUREMENT (cont'd)

PROCEDURE:

d) Adjust the spectrum analyzer LINEAR SENSITIVITY control for a measured dc voltage of -500mV dc (V_{DET1}) at the VERTICAL OUTPUT jack. (Check that trace is peaked on the display).

e) Set HP335D Step Attenuator to 20dB. Note the dc voltage level at the analyzer's VERTICAL OUTPUT jack. (V_{DET2}).

f) Calculate V_{off} where:

$$V_{off} = \frac{V_{DET2} - \alpha V_{DET1}}{1 - \alpha}$$

and $\alpha = V_{RF2}/V_{RF1}$* (i.e. α = attenuation) for attenuation selected here (20dB) =0.1
*See Calibration Chart provided with HP355D OPT H83

therefore:

$$V_{off} = \frac{V_{DET2} + 50.0mVdc}{0.9}$$

e.g., if V_{DET2} is -22.3mV dc,

$$V_{off} = \frac{-22.3mV\ dc + 50.0mV\ dc}{0.9}$$

$$= 30.78mV\ dc$$

g) Reset Step Attenuator to 0dB.

6. Set MASTER MOD control to CAL and verify that MASTER MOD indicator is OFF.

VOR (30 Hz TONE)

7. Verify that NAV-750 controls are set as outlined in step 2.

8. Using the Spectrum Analyzer LINEAR SENSITIVITY control, adjust the measured dc level at the VERTICAL OUTPUT to:

$$-282.8mV + V_{off}$$

where:

V_{off} is that value calculated in step 5.

(cont'd next page)

5.18A AMPLITUDE MODUALTION DEPTH MEASUREMENT (cont'd)

PROCEDURE:

9. Measure the ac level in mV at the VERTICAL OUTPUT jack (V_{rms}).

10. Calculate percentage of modulation where:

$$\% \text{ Mod} = \frac{V_{rms} \times \sqrt{2}}{282.8\text{mV}}$$

OR

$$\% \text{ Mod} = \frac{V_{rms}}{2}$$

NOTE

$$V_{rms} = \% \text{ Mod} \times 2.0$$

e.g., 50% modulation is indicated by an ac level at the VERTICAL OUTPUT jack of (50.0 x 2.0) mV rms or 100.0mV rms.

11. Modulation percentage for VOR 30 Hz tone should be 30(±1.2)%.

28.8%____31.2%

12. Adjust 9960 Hz tone control to CAL and verify that 9960 Hz UNCAL indicator is OFF.

VOR (9960 TONE)

13. Adjust 30 Hz tone modulation level control to uncal full ccw (0) and verify that 30 Hz tone UNCAL indicator is ON.

14. Repeat steps 8 through 10 to determine modulation percentage for 9960 tone.

15. Modulation percentage for VOR 9960 tone should be 30(±1.2)%.

28.8% ____31.2%

16. Adjust 30 Hz tone control to CAL and verify that 30 Hz UNCAL indicator is OFF.

(cont'd next page)

5.18A AMPLITUDE MODULATION DEPTH MEASUREMENT (cont'd)

PROCEDURE:

LOC (90 Hz TONE)

17. Set NAV-750 FREQUENCY selector switches to 108.100 MHz and verify that LOC mode indicator is ON.

18. Set G/S DDM selector switch to 90 Hz and verify that the 150 Hz tone off indicator is ON.

19. Repeat steps 8 through 10 to determine modulation percentage for 90 Hz tone.

20. Modulation percentage for LOC 90 Hz tone should be 20(±0.8)%.

19.2%____20.8%

LOC (150 Hz TONE)

21. Set G/S DDM selector switch to 150 Hz and verify that 150 Hz tone off indicator is OFF and 90 Hz tone off indicator is ON.

22. Repeat steps 8 through 10 to determine modulation percentage for 150 Hz tone.

23. Modulation percentage for LOC 150 Hz tone should be 20(±0.8)%

19.2%____20.8%

24. Set G/S DDM selector switch to 0 and verify that both tone off indicators are OFF.

G/S (90 Hz TONE)

25. Set LOC-G/S frequency selector switch to G/S and verify that G/S mode indicator is ON.

26. Set LOC DDM selector switch to 90 Hz and verify that 150 Hz tone off indicator is ON.

27. Repeat step 8 through 10 to determine modulation percentage for 90 Hz tone.

28. Modulation percentage for G/S 90 Hz tone should be 40(±1.6)%.

38.4%____41.6%

G/S (150 Hz TONE)

29. Set LOC DDM selector switch to 150 Hz and verify that 90 Hz tone off indicator is ON.

(cont'd next page)

5.18A AMPLITUDE MODULATION DEPTH MEASUREMENT (cont'd)

PROCEDURE:

30. Repeat steps 8 through 10 to determine modulation percentage for 150 Hz tone.

31. Modulation percentage for G/S 150 Hz tone should be 40(±1.6)%.

38.4%____41.6%

32. Set LOC DDM selector switch to 0 and verify that both tone off indicators are OFF.

COMM (1020 Hz TONE)

33. Set NAV-750 FREQUENCY selector switches to 118.000 MHz.

34. Repeat steps 8 through 10 to determine modulation percentage for 1020 Hz tone.

35. Modulation percentage for COMM 1020 Hz tone should be 30(±1.2)%.

28.8%____31.2%

5.19 AMPLITUDE MODULATION DEPTH MEASUREMENT PROCEDURE FOR NAV-750B MARKER BEACON TONES.

DESCRIPTION: This procedure measures the amplitude modulation level of all marker beacon tones produced by the NAV-750B with a modulation meter.

SPECIFICATIONS:

TONE	% MODULATION
400 Hz	95(±2.85)%
1300 Hz	95(±2.85)%
3000 Hz	95(±2.85)%

NOTE

Maximum Modulation Depth capability is at least 60% from 70 to 74 MHz.

TEST EQUIPMENT:

Modulation Meter

(cont'd next page)

5.19 AMPLITUDE MODULATION DEPTH MEASUREMENT PROCEDURE FOR NAV-750B MARKER BEACON TONES. (cont'd)

PROCEDURE:

1. Set controls as follows:

   FREQUENCY. . . . . .75.000 MHz

   Meter Function and tone selector switch. . . . . .400 Hz

   Output Attenuator. . . . . -13 dBm

MKR BEACON (400 Hz TONE).

2. Connect modulation meter to the NAV-750B RF output connector (J3) and measure 400 Hz tone modulation depth.

3. Modulation meter should indicate 95(±2.85)%.
   92.15%____97.85%

MKR BEACON (1300 Hz TONE)

4. Set meter function and tone selector switch to 1300 Hz.

5. Modulation meter should indicate 95(±2.85)%.
   92.15%____97.85%

MKR BEACON (3000 Hz TONE)

6. Set meter function and tone selector switch to 3000 Hz.

7. Modulation meter should indicate 95(±2.85)%
   92.15%____97.85%

5.20 METER MODULATION SCALE TEST

DESCRIPTION: This procedure checks the NAV-750 meter modulation scales against measured tone modulation levels. Ensure that Meter Mechanical Zero Check (5.7) has been performed before performing this procedure. Adjustments for the 30 and 100% modulation scale, located on PC-3, are R349 and R348.

ADDITIONAL DATA REQUIRED:

Recorded results of Amplitude Modulation Depth Measurement procedure (5-17 or 5-17A and 5-18 for NAV-750B).

(cont'd next page)

5.20 METER MODULATION SCALE TEST (cont'd)

SPECIFICATIONS:

MODULATION	METER TOLERANCE
30%	±1.2% Mod. from measured value
20%	±0.8% Mod. from measured value
40%	±1.6% Mod. from measured value
95%*	±3.0% Mod. from measured value

*NAV-750B only

TEST EQUIPMENT: None

PROCEDURE:

1. Set controls as follows:

FREQUENCY. . . . . 108.000 MHz

Meter Function Switch. 0-30

9960 Hz. . . . . .UNCAL Max. ccw (0)

30 Hz. . . . . CAL

1020 Hz. . . . . CAL

MASTER MOD . . . . . CAL

LOC DDM Selector switch. 0

G/S DDM Selector switch. 0

30% MODULATION

2. Record 30% Mod. measured value from paragraph 5.18 step 3 or 5.18A step 11.

Measured Value_____

3. Meter should indicate measured value recorded in step 2, ±1.2% Modulation.

Measured Value (±1.2% Mod.) _____

20% MODULATION

4. Record 20% Mod. measured value from paragraph 5.18 step 12 or 5.18A step 23.

Measured Value_____

5. Set FREQUENCY selector switches to 108.100 MHz.

(cont'd next page)

5.20 METER MODULATION SCALE TEST (cont'd)

PROCEDURE:

6. Set G/S DDM selector switch to 150 Hz.

7. Meter should indicate measured value recorded in step 4, ±0.8% Modulation.

Measure Value (±0.8% Mod.)____

8. Set G/S DDM selector switch to 0.

40% MODULATION

9. Record 40% Mod. measured value from paragraph 5.18 step 18 or 5.18A step 31.

Measured Value____

10. Set meter function switch to 0-100.

11. Set LOC-G/S frequency select switch to G/S.

12. Set LOC DDM selector switch to 150 Hz.

13. Meter should indicate measured value recorded in step 9, ±1.6% Modulation.

Measured Value (±1.6%Mod)____

14. Set LOC-G/S frequency select switch to LOC.

15. Set LOC DDM selector switch to 0.

NOTE

Perform the following steps for the NAV-750B only.

95% MODULATION

16. Record 95% Mod. measured value from paragraph 5.19 step 3.

Measured Value____

17. Set meter function and tone selector switch to 400Hz.

18. Set FREQUENCY selector switches to 75.000 MHz.

19. Meter should indicate measured value recorded in step 16, ±2.85% Modulation.

Measured Value (±2.85% Mod.)____

5.21 METER RF LEVEL SCALE TEST

DESCRIPTION: The RF level scale of the meter is checked at all frequency bands. Before proceeding, ensure that the output attenuator calibration and frequency response test has verified the RF output level. The adjustment control for the RF level meter scale is R343 on PC-3 and affects only the meter indication.

SPECIFICATION: Meter needle should be aligned over RF LEVEL vertical mark, ±1½ needle widths, at all RF frequencies.

NOTE

After allowing for parallax, 1½ needle widths is when the meter needle is off-center just enough to expose the entire length of the RF LEVEL vertical mark.

TEST EQUIPMENT: None

PROCEDURE:

1. Set controls as follows:

   FREQUENCY. . . . . .108.000 MHz

   Meter Function Switch. . . . . RF

2. Meter needle should be aligned over the RF LEVEL vertical mark, ±1½ needle widths.

   ____(✓)

3. While advancing the FREQUENCY selector switches in 10 MHz steps to 335 MHz, verify that meter needle remains aligned over RF LEVEL vertical mark, ±1½ needle widths.

   ____(✓)

NOTE

Perform the following steps for the NAV-750B only.

4. Set FREQUENCY selector switches to 72.000 MHz

5. While advancing the FREQUENCY selector switches in 1 MHz steps to 78.000 MHz, verify that meter needle remains aligned over RF LEVEL vertical mark, ±1½ needle widths.

   ____(✓)

5.22 VOR BEARING ACCURACY TEST

DESCRIPTION: VOR bearing accuracy is tested with a Bearing Checking Device such as the IFR CS-360(D).

SPECIFICATIONS: ±0.05°

NOTE

If the above specification is not met, the following calibration procedures must be performed.

Power Supply Voltages
2.16 MHz Oscillator
Tone Distortion
Tone Modulation Levels
DDM Centering*

*Perform only if 11 volt power supplies have been adjusted.

TEST EQUIPMENT: Bearing Check Device
Oscilloscope

PROCEDURE:

1. Set controls as follows:

   FREQUENCY. . . . . .108.000 MHz

   1020 Hz. . . . . .UNCAL Fully ccw (0)

   BEARING-FREQ . . . . . .BEARING

   TO-FROM. . . . . TO

2. Press 0° VOR bearing select pushbutton switch and verify that bearing display is 0.00 degrees.

3. Verify that VOR mode indicator is ON.

4. Verify that 1020 Hz UNCAL indicator is ON.

5. Connect vertical input of oscilloscope to NAV-750 rear panel DEMOD jack (J-23).

(cont'd next page)

5.22 VOR BEARING ACCURACY TEST (cont'd)

PROCEDURE:

6. Verify that the 9960 Hz tone, frequency modulated with 30Hz, and the amplitude modulating 30Hz tone are present.

7. Disconnect oscilloscope and connect IFR CS-360(D) or equivalent bearing checking device to DEMOD jack (J23).

NOTE

The IFR CS-360(D) may be connected to either the DEMOD jack (J23) or to the RF output connector (J3) on the front panel.

8. Measure bearing error for 0 degrees TO.

9. Bearing error should not exceed ±0.05 degrees.
-0.05°____+0.05°

10. Place NAV-750 TO/FROM switch to FROM position.

11. Measure bearing error for 0 degrees FROM.

12. Bearing error should not exceed ±0.05 degrees.
-0.05°____+0.05°

13. Press NAV-750 180° VOR bearing select pushbutton and verify that bearing display is 180.00 degrees.

14. Place NAV-750 TO/FROM switch to TO position.

15. Measure bearing error for 180.00 degrees TO.

16. Bearing error should not exceed ±0.05 degrees.
-0.05°____+0.05°

17. Place the NAV-750 TO/FROM switch to FROM.

18. Measure bearing error for 180.00° FROM.

19. Bearing error should not exceed ±0.05 degrees.
-0.05°____+0.05°

20. Press NAV-750 90° VOR bearing select pushbutton and verify that bearing display is 90.0 degrees.

21. Place the NAV-750 TO/FROM switch to TO.

(cont'd next page)

5.22 VOR BEARING ACCURACY TEST (cont'd)

PROCEDURE:

22. Measure bearing error for 90.00° TO.

23. Bearing error should not exceed ±0.05 degrees.
-0.05°____+0.05°

24. Place NAV-750 TO/FROM switch to FROM.

25. Measure bearing error for 90.00° FROM.

26. Bearing error should not exceed ±0.05 degrees.
-0.05°____+0.05°

27. Press NAV-750 270° VOR bearing select pushbutton and verify that bearing display is 270° degrees.

28. Place the NAV-750 TO/FROM switch to TO.

29. Measure bearing error for 270° TO.

30. Bearing error should not exceed ±0.05°.
-0.05°____+0.05°

31. Place the NAV-750 TO/FROM switch to FROM.

32. Measure bearing error for 270° FROM.

33. Bearing error should not exceed ±0.05 degrees.
-0.05°____+0.05°

5.23 LOC CENTERING SIGNAL TEST

DESCRIPTION: To minimize centering error contribution to tone ratio measurements, it is necessary that the 90 Hz and 150 Hz tones are balanced as closely as possible. This procedure checks tone balance by measuring the 90 Hz and 150 Hz tones individually and comparing the tone voltage values. In the standard NAV-750 model, the 90 Hz DEMOD voltage should be within ±1mV of the 150 Hz tone voltage. In the NAV-750A and B models, this requirement is ±0.27mV.

NOTE

0.27mV = 0.0001 DDM
2.75mV = 0.001 DDM

(cont'd next page)

5.23 LOC CENTERING SIGNAL TEST (cont'd)

TEST EQUIPMENT:

True RMS Voltmeter

PROCEDURE:

1. Set controls as follows:

   FREQUENCY. . . . . .108.100 MHz

   LOC-G/S Switch . . . . . .LOC

   LOC DDM Selector Switch. 0

   G/S DDM Selector Switch. . . . . 150 Hz

   MASTER MOD . . . . . .CAL

   1020 Hz. . . . . .CAL

2. Verify that LOC mode indicator and 90 Hz tone off indicators are ON.

3. Connect true RMS voltmeter to DEMOD jack (J23).

4. Measure and record 150 Hz DEMOD voltage.

   ____Vrms

5. Set G/S DDM selector switch to 90 Hz and verify that 150 Hz tone off indicator is ON.

6. Measure and record 90 Hz DEMOD voltage.

   ____Vrms

7. Determine the voltage difference between the 90 Hz tone (step 6) and the 150 Hz tone (step 4). For the standard NAV-750 model, the 90 Hz tone DEMOD voltage should be within ±1.0mV of the 150 Hz tone DEMOD voltage.

   -1mV____+1mV

   For the NAV-750A and B models, the 90 Hz tone DEMOD voltage should be within ±0.27mV of the 150 Hz tone DEMOD voltage.

   -0.27mV____+0.27mV

5.24 LOC TONE RATIO TEST (NAV-750 only)

DESCRIPTION: Specific deviations left or right from LOC course center are simulated by attenuating either the 90 Hz or 150 Hz tone. The amount of attenuation establishes a tone ratio, i.e., the larger amplitude tone value divided by the smaller amplitude tone value, and is directly proportional to a specific DDM value. These DDM values are LOC DDM selector switch positions. This procedure verifies voltage ratios at selected DDM switch positions.

SPECIFICATIONS:

DDM	VOLTAGE RATIO	TOLERANCE
.093	1.606	1.596 to 1.616
.155	2.265	2.240 to 2.290
.200	3.000	2.951 to 3.051

TEST EQUIPMENT:

True RMS Voltmeter

PROCEDURE:

1. Set controls as follows:

   FREQUENCY. . . . . .108.100 MHz

   LOC-G/S Switch . . . . . .LOC

   LOC DDM Selector Switch. 0

   G/S DDM Selector Switch. 90Hz

   MASTER MOD . . . . . .CAL

   1020 Hz. . . . . .CAL

2. Verify that LOC mode and 150 Hz tone off indicators are ON.

3. Connect true RMS voltmeter to DEMOD jack (J23) to measure demodulated tone voltage.

(cont'd next page)

5.24 LOC TONE RATIO TEST (cont'd)

PROCEDURE:

.093 DDM CHECK

NOTE

A voltage ratio at the tolerance limit of 1.596 or 1.615 will result in a DDM accuracy of ±0.0011625 DDM for 0.093 DDM.

4. Set LOC DDM selector switch to right .093 DDM.

5. Measure and record 90 Hz DEMOD voltage.

____Vrms

6. Set G/S DDM selector switch to 150 Hz and verify that 90 Hz tone indicator is ON.

7. Measure and record 150 Hz DEMOD voltage.

____Vrms

8. Divide result of step 5 by result of step 7 to obtain voltage ratio.

9. Voltage ratio should be 1.606 (1.596 to 1.616).

(Right .093) 1.596____1.616

10. Set LOC DDM selector switch to left .093 DDM.

11. Measure and record 150 Hz DEMOD voltage.

____Vrms

12. Set G/S DDM selector switch to 90 Hz.

13. Measure and record 90 Hz DEMOD voltage.

____Vrms

14. Divide result of step 11 by result of step 13 to obtain voltage ratio.

15. Voltage ratio should be 1.606(1.596 to 1.616).

(Left .093) 1.596____1.616

(cont'd next page)

5.24 LOC TONE RATIO TEST (cont'd)

PROCEDURE:

.155 DDM CHECK

NOTE

A voltage ratio at the tolerance limit of 2.240 or 2.290 will result in a DDM accuracy of ±0.00186 DDM for .155 DDM.

16. Set LOC DDM selector switch to right .155 DDM.

17. Measure and record 90 Hz DEMOD voltage.

____Vrms

18. Set G/S DDM selector switch to 150 Hz.

19. Measure and record 150 Hz DEMOD voltage.

____Vrms

20. Divide result of step 17 by result of step 19 to obtain voltage ratio.

21. Voltage ratio should be 2.265(2.240 to 2.290).

(Right .155) 2.240____2.290

22. Set LOC DDM selector switch to left .155 DDM.

23. Measure and record 150 Hz DEMOD voltage.

____Vrms

24. Set G/S DDM control to 90 Hz.

25. Measure and record 90 Hz DEMOD voltage.

____Vrms

26. Divide result of step 23 by result of step 25 to obtain voltage ratio.

27. Voltage ratio should be 2.265(2.240 to 2.290).

(Left .155) 2.240____2.290

(cont'd next page)

5.24 LOC TONE RATIO TEST (cont'd)

PROCEDURE:

.200 DDM CHECK

NOTE

A voltage ratio at the tolerance limit of 2.9510 or 3.0510 will result in a DDM accuracy of ±0.00250 DDM for .200 DDM.

28. Set LOC DDM selector switch to right .200 DDM.

29. Measure and record 90 Hz DEMOD voltage. ____Vrms

30. Set G/S DDM selector switch to 150 Hz.

31. Measure and record 150 Hz DEMOD voltage. ____Vrms

32. Divide result of step 29 by result of step 31 to obtain voltage ratio.

33. Voltage ratio should be 3.000(2.951 to 3.051).

(Right .200) 2.951____3.051

34. Set LOC DDM selector switch to left .200 DDM.

35. Measure and record 150 Hz DEMOD voltage. ____Vrms

36. Set G/S DDM selector switch to 90 Hz.

37. Measure and record 90 Hz DEMOD voltage. ____Vrms

38. Divide result of step 35 by result of step 37 to obtain voltage ratio.

39. Voltage ratio should be 3.000(2.951 to 3.051).

(Left .200) 2.951____3.051

5.25 LOC TONE RATIO TEST (NAV-750A and B only)

DESCRIPTION: Specific deviations left or right from LOC course center are simulated by attenuating either the 90 Hz or 150 Hz tone. The amount of attenuation establishes a tone ratio, i.e., the larger amplitude tone value divided by the smaller amplitude tone value, and is directly proportional to a specific DDM value. These DDM values are LOC DDM selector switch positions. This procedure verifies voltage ratios at selected DDM switch positions.

SPECIFICATIONS:

DDM	VOLTAGE RATIO	TOLERANCE
.046	1.2599	1.2583 to 1.2615
.093	1.6059	1.6037 to 1.6080
.155	2.2653	2.2603 to 2.2703
.200	3.0000	2.9925 to 3.0075

TEST EQUIPMENT:

True RMS Voltmeter

PROCEDURE:

1. Set controls as follows:

   FREQUENCY. . . . . .108.100 MHz

   LOC-G/S Switch . . . . . .LOC

   LOC DDM Selector Switch. 0

   G/S DDM Selector Switch. . . . . .90 Hz

   MASTER MOD . . . . . .CAL

   1020 HZ. . . . . .CAL

2. Verify that LOC mode and 150 Hz tone off indicators are ON.

3. Connect true RMS voltmeter to DEMOD jack (J23) to measure demodulated tone voltage.

(cont'd next page)

5.25 LOC TONE RATIO TEST (cont'd)

PROCEDURE:

.046 DDM CHECK

NOTE

A voltage ratio at the tolerance limit of 1.2583 or 1.2615 will result in a DDM accuracy of ±0.00025 DDM for 0.046 DDM.

4. Set LOC DDM selector switch to right .046 DDM.

5. Measure and record 90 Hz DEMOD voltage.

____Vrms

6. Set G/S DDM selector switch to 150 Hz and verify that 90 Hz tone off indicator is ON.

7. Measure and record 150 Hz DEMOD voltage.

____Vrms

8. Divide result of step 5 by result of step 7 to obtain voltage ratio.

9. Voltage ratio should be 1.2599(1.2583 to 1.2615).

(Right .046) 1.2583____1.2615

10. Set LOC DDM selector switch to left .046 DDM.

11. Measure and record 150Hz DEMOD voltage.

____Vrms

12. Set G/S DDM selector switch to 90 Hz.

13. Measure and record 90 Hz DEMOD voltage.

____Vrms

14. Divide result of step 11 by result of step 13 to obtain voltage ratio.

15. Voltage ratio should be 1.2599(1.2583 to 1.2615).

(Left .046) 1.2583____1.2615

(cont'd next page)

5.25 LOC TONE RATIO TEST (cont'd)

PROCEDURE:

.093 DDM CHECK

NOTE

A voltage ratio at the tolerance limit of 1.6037 or 1.6080 will result in a DDM accuracy ±0.00025 DDM for 0.093 DDM.

16. Set LOC DDM selector switch to right .093 DDM.

17. Measure and record 90 Hz DEMOD voltage.

____Vrms

18. Set G/S DDM selector switch to 150 Hz.

19. Measure and record 150 Hz DEMOD voltage.

____Vrms

20. Divide result of step 17 by result of step 19 to obtain voltage ratio.

21. Voltage ratio should be 1.6059(1.6037 to 1.6080)

(Right .093) 1.6037____1.6080

22. Set LOC DDM selector switch to left .093 DDM.

23. Measure and record 150 Hz DEMOD voltage.

____Vrms

24. Set G/S DDM control to 90 Hz.

25. Measure and record 90 Hz DEMOD voltage.

____Vrms

26. Divide result of step 23 by result of step 25 to obtain voltage ratio.

27. Voltage ratio should be 1.6059(1.6037 to 1.6080).

(Left .093) 1.6037____1.6080

(cont'd next page)

5.25 LOC TONE RATIO TEST (cont'd)

PROCEDURE:

.155 DDM CHECK

NOTE

A voltage ratio at the tolerance limit of 2.2603 or 2.2703 will result in a DDM accuracy of ±0.00037 DDM for 0.155 DDM.

28. Set LOC DDM selector switch to right .155 DDM.

29. Measure and record 90 Hz DEMOD voltage.

____Vrms

30. Set G/S DDM selector switch to 150 Hz.

31. Measure and record 150 Hz DEMOD voltage.

____Vrms

32. Divide result of step 29 by result of step 31 to obtain voltage ratio.

33. Voltage ratio should be 2.2653(2.2603 to 2.2703).

(Right .155) 2.2603____2.2703

34. Set LOC DDM selector switch to left .155 DDM.

35. Measure and record 150 Hz DEMOD voltage.

____Vrms

36. Set G/S DDM selector switch to 90 Hz.

37. Measure and record 90 Hz DEMOD voltage.

____Vrms

38. Divide result of step 35 by result of step 37 to obtain voltage ratio.

39. Voltage ratio should be 2.2653(2.2603 to 2.2703).

(Left .155) 2.2603____2.2703

(cont'd next page)

5.25 LOC TONE RATIO TEST (cont'd)

PROCEDURE:

.200 DDM CHECK

NOTE

A voltage ratio at the tolerance limit of 2.9925 or 3.0075 will result in a DDM accuracy of ±0.00037 DDM for 0.200 DDM.

40. Set LOC DDM selector switch to right .200 DDM.

41. Measure and record 90 Hz DEMOD voltage.

____Vrms

42. Set G/S DDM selector switch to 150 Hz.

43. Measure and record 150 Hz DEMOD voltage.

____Vrms

44. Divide result of step 41 by result of step 43 to obtain voltage ratio.

45. Voltage ratio should be 3.0000(2.9925 to 3.0075).

(Right .200) 2.9925____3.0075

46. Set LOC DDM selector switch to left..200 DDM.

47. Measure and record 150 Hz DEMOD voltage.

____Vrms

48. Set G/S DDM select switch to 90 Hz.

49. Measure and record 90 Hz DEMOD voltage.

____Vrms

50. Divide result of step 47 by result of step 49 to obtain voltage ratio.

51. Voltage ratio should be 3.0000(2.9925 to 3.0075).

(Left .200) 2.9925____3.0075

5.26 G/S CENTERING SIGNAL TEST

DESCRIPTION: To minimize centering error contribution to tone ratio measurements, it is necessary that the 90 Hz and 150 Hz tone voltages are balanced as closely as possible. This procedure checks tone balance by measuring the 90 Hz and 150 Hz tones individually and comparing the tone voltage values. In the standard NAV-750 model, the 90 Hz DEMOD voltage should be within ±1mV of the 150 Hz tone voltage. In the NAV-750A and B models, this requirement is ±0.27mV.

NOTE

0.27mV = 0.0001 DDM
2.75mV = 0.001 DDM

TEST EQUIPMENT:

True RMS Voltmeter

PROCEDURE:

1. Set controls as follows:

   FREQUENCY. . . . . .108.100 MHz

   LOC-G/S switch . . . . . .G/S

   LOC DDM Selector Switch. . . . . 150 Hz

   G/S DDM Selector Switch. 0

   MASTER MOD . . . . . .CAL

   1020 Hz. . . . . .CAL

2. Verify that G/S mode and 90 Hz tone off indicators are ON.

3. Connect true RMS voltmeter to DEMOD jack (23).

4. Measure and record 150 Hz DEMOD voltage.

   ____Vrms

5. Set LOC DDM selector switch to 90 Hz and verify that 150 Hz tone off indicator is ON.

(cont'd next page)

5.26 G/S CENTERING SIGNAL TEST (cont'd)

PROCEDURE:

6. Measure and record 90 Hz DEMOD voltage.

____Vrms

7. Determine the voltage difference between the 90 Hz tone (step 6) and the 150 Hz tone (step 4). For the standard NAV-750 model, the 90 Hz tone DEMOD voltage should be within ±1.0mV of the 150 Hz tone DEMOD voltage.

-1mV____+1mV

For the NAV-750A & B models, the 90 Hz tone DEMOD voltage should be within ±0.27mV of the 150 Hz tone DEMOD voltage.

-0.27mV____+0.27mV

5.27 G/S TONE RATIO TEST (NAV-750 only)

DESCRIPTION: Specific deviation up or down from G/S course center are simulated by attenuating either the 90 Hz or 150 Hz tone. The amount of attenuation establishes a tone ratio, i.e. the larger amplitude tone divided by the smaller amplitude tone, and is directly proportional to a specific DDM value. These DDM values are G/S DDM selector switch positions. This procedure verifies voltage ratios at selected DDM switch positions.

SPECIFICATIONS:

DDM	VOLTAGE RATIO	TOLERANCE
.091	1.257	1.253 to 1.260
.175	1.560	1.550 to 1.570
.400	3.000	2.951 to 3.051

TEST EQUIPMENT:

True RMS Voltmeter

PROCEDURE:

1. Set controls as follows:

   FREQUENCY. . . . . .108.100 MHz

   LOC-G/S Switch . . . . . .G/S

   LOC DDM Selector Switch. . . . . .90 Hz

   G/S DDM Selector Switch. 0

   MASTER MOD . . . . . .CAL

   1020 Hz. . . . . .CAL

2. Verify that G/S mode and 150 Hz tone off indicators are ON.

3. Connect true RMS voltmeter to DEMOD jack (J23) to measure demodulated tone voltage.

(cont'd next page)

5.27 G/S TONE RATIO TEST (cont'd)

PROCEDURE:

.091 DDM CHECK

NOTE

A voltage ratio at the tolerance limit of 1.253 or 1.260 will result in a DDM accuracy of ±0.00245 DDM for 0.091 DDM.

4. Set G/S DDM selector switch to left .091 DDM.

5. Measure and record 90 Hz DEMOD voltage.

____Vrms

6. Set LOC DDM selector switch to 150 Hz and verify that 90 Hz tone off indicator is ON.

7. Measure and record 150 Hz DEMOD voltage.

____Vrms

8. Divide result of step 5 by result of step 7 to obtain voltage ratio.

9. Voltage ratio should be 1.257(1.253 to 1.260).

(Left .091) 1.253____1.260

10. Set G/S DDM selector switch to right .091 DDM.

11. Measure and record 150 Hz DEMOD voltage.

____Vrms

12. Set LOC DDM selector switch to 90 Hz.

13. Measure and record 90 Hz DEMOD voltage.

____Vrms

14. Divide result of step 11 by result of step 13 to obtain voltage ratio.

15. Voltage ratio should be 1.257(1.253 to 1.260).

(Right .091) 1.253____1.260

(cont'd next page)

5.27 G/S TONE RATIO TEST (cont'd)

PROCEDURE:

.175 DDM CHECK

NOTE

A voltage ratio at the tolerance limit of 1.550 or 1.570 will result in a DDM accuracy of ±0.00245 DDM for 0.175 DDM.

16. Set G/S DDM selector switch to left .175 DDM.

17. Measure and record 90 Hz DEMOD voltage. ____Vrms

18. Set DDM selector switch to 150 MHz.

19. Measure and record 150 Hz DEMOD voltage. ____Vrms

20. Divide result of step 17 by result of step 19 to obtain voltage ratio.

21. Voltage ratio should be 1.560(1.550 to 1.570).

(Left .175) 1.550____1.570

22. Set G/S DDM selector switch to right .175 DDM.

23. Measure and record 150 Hz DEMOD voltage. ____Vrms

24. Set LOC DDM selector switch to 90 Hz.

25. Measure and record 90 Hz DEMOD voltage. ____Vrms

26. Divide result of step 23 by result of step 25 to obtain voltage ratio.

27. Voltage ratio should be 1.560(1.550 to 1.570).

(Right .175) 1.550____1.570

(cont'd next page)

5.27 G/S TONE RATIO TEST (cont'd)

PROCEDURE:

.400 DDM CHECK

NOTE

A voltage ratio at the tolerance limit of 2.951 or 3.051 will result in a DDM accuracy of ±0.00480 DDM for 0.400 DDM.

28. Set G/S DDM selector switch to left .400 DDM.

29. Measure and record 90 Hz DEMOD voltage.

____Vrms

30. Set LOC DDM selector switch to 150 Hz.

31. Measure and record 150 Hz DEMOD voltage.

____Vrms

32. Divide result of step 29 by result of step 31 to obtain voltage ratio .

33. Voltage ratio should be 3.000(2.951 to 3.051).

(Left .400) 2.951____3.051

34. Set G/S DDM selector switch to right .400 DDM.

35. Measure and record 150 Hz DEMOD voltage.

____Vrms

36. Set LOC DDM selector switch to 90 Hz.

37. Measure and record 90 Hz DEMOD voltage.

____Vrms

38. Divide result of step 35 by result of step 37 to obtain voltage ratio.

39. Voltage ratio should be 3.000(2.951 to 3.051).

(Right .400) 2.951____3.051

5.28 G/S TONE RATIO TEST (NAV-750A and B only)

DESCRIPTION: Specific deviation up or down from G/S course center are simulated by attenuating either the 90 Hz or 150 Hz tone. The amount of attenuation establishes a tone ratio, i.e. the larger amplitude tone divided by the smaller amplitude tone, and is directly proportional to a specific DDM value. These DDM values are G/S DDM selector switch positions. This procedure verifies that specific selected DDM ratios are correct.

SPECIFICATIONS:

DDM	VOLTAGE RATIO	TOLERANCE
.045	1.1192	1.1185 to 1.1199
.091	1.2567	1.2550 to 1.2575
.175	1.5600	1.5583 to 1.5615
.400	3.0000	2.9963 to 3.0037

TEST EQUIPMENT:

True RMS Voltmeter

PROCEDURE:

1. Set controls as follows:

   FREQUENCY . . . . . 108.100 MHz

   LOC-G/S Switch. . . . . G/S

   LOC DDM Selector Switch . . . . . 90 Hz

   G/S DDM Selector Switch 0

   MASTER MOD. . . . . CAL

   1020 Hz . . . . . CAL

2. Verify that G/S mode and 150 Hz tone off indicators are ON.

3. Connect true RMS voltmeter to DEMOD jack (J23) to measure demodulated tone voltage.

(cont'd next page)

5.28 G/S TONE RATIO TEST (cont'd)

PROCEDURE:

.045 DDM CHECK

NOTE

A voltage ratio at the tolerance limit of 1.1185 or 1.1199 will result in a DDM accuracy of ±0.00025 DDM for 0.045 DDM.

4. Set G/S DDM selector switch to left .045 DDM.

5. Measure and record 90 Hz DEMOD voltage.

____Vrms

6. Set LOC DDM selector switch to 150 Hz and verify that 90 Hz tone off indicator is ON.

7. Measure and record 150 Hz DEMOD voltage.

____Vrms

8. Divide result of step 5 by result of step 7 to obtain voltage ratio.

9. Voltage ratio should be 1.1192(1.1185 to 1.1199).

(Left .045) 1.1185____1.1199

10. Set G/S DDM selector switch to right .045 DDM.

11. Measure and record 150 Hz DEMOD voltage.

____Vrms

12. Set LOC DDM selector switch to 90 Hz.

13. Measure and record 90 Hz DEMOD voltage.

____Vrms

14. Divide result of step 11 by result of step 13 to obtain voltage ratio.

15. Voltage ratio should be 1.1192(1.1185 to 1.1199).

(Right .045) 1.1185____1.1199

(cont'd next page)

5.28 G/S TONE RATIO TEST (cont'd)

PROCEDURE:

.091 DDM CHECK

NOTE

A voltage ratio at the tolerance limit of 1.2559 or 1.2575 will result in a DDM accuracy of ±0.00025 DDM for 0.091 DDM.

16. Set G/S DDM selector switch to left .091 DDM.

17. Measure and record 90 Hz DEMOD voltage.

____Vrms

18. Set DDM selector switch to 150 Hz.

19. Measure and record 150 Hz DEMOD voltage.

____Vrms

20. Divide result of step 17 by result of step 18 to obtain voltage ratio.

21. Voltage ratio should be 1.2567(1.2559 to 1.2575).

(Left .091) 1.2559____1.2575

22. Set G/S DDM selector switch to right .091 DDM.

23. Measure and record 150 Hz DEMOD voltage.

____Vrms

24. Set LOC DDM selector switch to 90 Hz.

25. Measure and record 90 Hz DEMOD voltage.

____Vrms

26. Divide result of step 23 by result of step 25 to obtain voltage ratio.

27. Voltage ratio should be 1.2567(1.2559 to 1.2575).

(Right .091) 1.2559____1.2575

(cont'd next page)

5.28 G/S TONE RATIO TEST (cont'd)

PROCEDURE:

.175 DDM CHECK

NOTE

A voltage ratio at the tolerance limit of 1.5585 or 1.5615 will result in a DDM accuracy of ±0.00037 DDM for 0.175 DDM.

28. Set G/S DDM selector switch to left .175 DDM.

29. Measure and record 90 Hz DEMOD voltage.

____Vrms

30. Set LOC DDM selector switch to 150 Hz.

31. Measure and record 150 Hz DEMOD voltage.

____Vrms

32. Divide result of step 29 by result of step 31 to obtain voltage ratio.

33. Voltage ratio should be 1.5600(1.5585 to 1.5615).

(Left .175) 1.5585____1.5615

34. Set G/S DDM selector switch to right .175 DDM.

35. Measure and record 150 Hz DEMOD voltage.

____Vrms

36. Set LOC DDM selector switch to 90 Hz.

37. Measure and record 90 Hz DEMOD voltage.

____Vrms

38. Divide result of step 35 by result of step 37 to obtain voltage ratio.

39. Voltage ratio should be 1.5600(1.5585 to 1.5615).

(Right .175) 1.5585____1.5615

(cont'd next page)

5.28 G/S TONE RATIO TEST (cont'd)

PROCEDURE:

.400 DDM CHECK

NOTE

A voltage ratio at the tolerance limit of 2.9963 or 3.0037 will result in a DDM accuracy of ±0.00037 DDM for 0.400 DDM.

40. Set G/S DDM selector switch to left .400 DDM.

41. Measure and record 90 Hz DEMOD voltage.

____Vrms

42. Set LOC DDM selector switch to 150 Hz.

43. Measure and record 150 Hz DEMOD voltage.

____Vrms

44. Divide result of step 41 by result of step 43 to obtain voltage ratio.

45. Voltage ratio should be 3.000(2.9963 to 3.0037).

(Left .400) 2.9963____3.0037

46. Set G/S DDM selector switch to right .400 DDM.

47. Measure and record 150 Hz DEMOD voltage.

____Vrms

48. Set LOC DDM selector switch to 90 Hz.

49. Measure and record 90 Hz DEMOD voltage.

____Vrms

50. Divide result of step 47 by result of step 49 to obtain voltage ratio.

51. Voltage ratio should be 3.000(2.9963 to 3.0037).

(Right .400) 2.9963____3.0037

5.29 150 Hz TONE PHASE SHIFT TEST

DESCRIPTION: The phase relationship between the 90 Hz and 150 Hz tones (at every 1/30 second) is normally fixed to within ±0.1 degree. This phase relationship can be varied 5 degrees for each degree of selected VOR bearing while the Ø pushbutton is pressed. When the VOR bearing is 12 degrees and the Ø pushbutton is pressed, the amplitude summation of the 90 Hz and 150 Hz tones is greatest. This procedure checks the 150 Hz tone phase shift circuitry.

SPECIFICATION: 90 Hz and 150 Hz tone phase relationship variable at five times the VOR selected bearing.

TEST EQUIPMENT:

Oscilloscope

PROCEDURE:

1. Set controls as follows:

   FREQUENCY. . . . . .108.100 MHz

   LOC-G/S Switch . . . . . .G/S

   BEARING-FREQ Switch. . . . . .BEARING

   MASTER MOD . . . . . .CAL

   LOC DDM Selector Switch. 0

   G/S DDM Selector Switch. 0

   .01-.05 Degree Bearing Select Switch 05

2. Connect oscilloscope vertical input to DEMOD jack (J23).

3. Verify that G/S mode indicator is ON.

4. Press 10° VOR bearing select pushbutton switch and verify that display is 10.00 degrees.

5. Rotate variable BEARING control clockwise until display is 12.00 degrees.

(cont'd next page)

5.29 150 Hz TONE PHASE SHIFT TEST (cont'd)

PROCEDURE:

6. Press Ø pushbutton switch and verify that oscilloscope display indicates an increase in phase shift between 90 Hz and 150 Hz tones.

____(✓)

7. Release Ø pushbutton and ensure that oscilloscope display returns to normal.

5.30 RF FREQUENCY TEST

DESCRIPTION: This procedure checks the accuracy of the 10 MHz reference oscillator located on the Phase Lock Board.

SPECIFICATIONS: Better than ±1ppm for 15° to 35°C (15° to 95°F)

TEST EQUIPMENT:

Frequency Counter

PROCEDURE:

1. Set control as follows:

FREQUENCY. . . . . 110.000 MHz

MASTER MOD . . . . . UNCAL Max ccw (0)

Output Attenuator. . . . . -30 dBm

2. Verify that Ø LOCK indicator is ON.

3. Connect frequency counter to front panel RF output connector (J3).

4. Adjust output attenuator clockwise to obtain reliable RF counter indication.

5. Counter should indicate 110.000MHz (±100 Hz).

109.9999 MHz____110.0001 MHz

5.31 ΔF OPERATION TEST

DESCRIPTION: This procedure checks the operation and range of the ΔF system.

SPECIFICATIONS: ΔF = ± 50 kHz minimum 108 MHz to 156 MHz.
ΔF = ±150 kHz minimum 329 MHz to 335 MHz.
ΔF = ± 30 kHz minimum 70 MHz to 79 MHz.*

* for NAV-750B only.

TEST EQUIPMENT: None

PROCEDURE:

1. Set controls as follows:

   FREQUENCY. . . . . .108.500 MHz

   BEARING-FREQ Switch. . . . . FREQ

   LOC-G/S Switch . . . . . .LOC

   ΔF Control . . . . . .UNCAL

   Meter Function Select Switch 0-100

2. Adjust ΔF control until frequency display is 108.500 MHz and verify that Ø LOCK indicator is ON.

3. Adjust ΔF control clockwise and counterclockwise and note that Ø LOCK indicator remains ON and displayed frequency range from 108.500 MHz is at least ± 50 kHz.

   ΔF, cw____108.450 MHz
   ΔF,ccw____108.550 MHz

4. Set FREQUENCY selector switch to 330.00 MHz

5. Adjust ΔF control until frequency display is 330.00 MHz and verify that Ø LOCK indicator is ON.

6. Adjust ΔF control clockwise and counterclockwise and note that Ø LOCK indicator remains ON and displayed frequency range from 330.00 MHz is at least ±150 kHz.

   ΔF, cw____329.850 MHz
   ΔF,ccw____330.150 MHZ

(cont'd next page)

5.31 ΔF OPERATION TEST (cont'd)

PROCEDURE:

NOTE

Perform the following steps for the NAV-750B only.

7. Set FREQUENCY selector switches to 72.000 MHz.

8. Adjust ΔF control until frequency display is 72.000 MHz and verify that Ø LOCK indicator is ON.

9. Adjust ΔF control clockwise and counterclockwise and note that Ø LOCK indicator remains ON and displayed frequency range from 72.000 MHz is at least ±30 kHz.

ΔF, cw____71.970 MHz
ΔF,ccw____72.030 MHz

5.32 METER ZERO AND BEARING ERROR TEST

DESCRIPTION: Bearing verification circuitry on PC-1 is designed to verify the performance of the NAV-750 VOR bearing generator at 90° and 270° and to generate verification information for display on the front panel meter. This procedure checks the verification and indicating system against the NAV-750 internally generated VOR bearing signals at 90° and 270°. Verification of VOR bearing accuracy prior to performing this procedure is required.

SPECIFICATIONS: Meter needle should be centered (meter zero) (±0.05°) when selected VOR bearing is 90° or 270°.

PROCEDURE:

1. Set controls as follows:

FREQUENCY. . . . . .108.000 MHz

BEARING-FREQ Switch. . . . . .BEARING

Meter Function Switch. . . . . ZERO

2. Allow approximately one minute for circuit stabilization

(cont'd next page)

5.32 METER ZERO AND BEARING ERROR TEST (cont'd)

PROCEDURE:

3. Press 90° VOR bearing select pushbutton switch and verify that display is 90.00 degrees.

4. Verify that VOR mode indicator is ON.

NOTE

The % modulation scale of the meter is used as a bearing deviation scale. The center (50%) is zero deviation (bearing zero) and each numbered division to the left is -0.1° and each numbered division to the right is +0.1°. Full scale, left and right, represents 0.5°.

5. Adjust BEARING ZERO control clockwise and counterclockwise to verify that meter needle is adjustable left and right of bearing zero.

____(✓)

6. Adjust BEARING ZERO control to center meter needle on bearing zero and verify that there is no appreciable meter needle drift.

____(✓)

7. Set TO/FROM bearing switch to the TO position.

8. Set meter function switch to BRG position.

9. Meter indication should remain at bearing zero (±0.05°).

-0.05°____+0.05°

10. Set TO/FROM bearing switch to the FROM position.

11. Meter indication should move off-center and then return to bearing zero (±0.05°).

-0.05°____+0.05°

12. Press the 270° VOR bearing select pushbutton and verify that display is 270°.

13. Meter indication should settle at bearing zero (±0.05°).

-0.05°____+0.05°

(cont'd next page)

5.32 METER ZERO AND BEARING ERROR TEST (cont'd)

PROCEDURE:

14. Set TO/FROM bearing switch to the TO position.

15. Meter indication should move off-center and then return to bearing zero (±0.05°).

-0.05°____+0.05°

5.33 SPECTRAL PURITY TEST FOR NAV-750

DESCRIPTION: This procedure checks the spectral purity of the NAV-750 using a Spectrum Analyzer.

SPECIFICATIONS:

Harmonics. . . . . .30dB below carrier, maximum (108.000 through 335.000MHz).

Close-in Noise (Single-sideband Noise):

At 108.000MHz. . . . . .74dB below carrier at ±20kHz in 300Hz resolution bandwidth, or 79dB below carrier at ±20kHz in 100Hz resolution bandwidth.

At 334.700MHz. . . . . .68dB below carrier at ±20kHz in 300Hz resolution bandwidth, or 73dB below carrier at ±20kHz in 100Hz resolution bandwidth.

Harmonic Spurious Noise:

NOTE

The NAV-750 phase-lock control frequency is 12.5kHz.

At 108.000MHz. . . . . .68dB below carrier at ±12.5kHz and 71dB below carrier at ±25.0 kHz in 300Hz resolution bandwidth.

At 334.700MHz. . . . . .63dB below carrier at ±12.5kHz and 74dB below carrier at ±15.0 kHz in 300Hz resolution bandwidth.

Broadband Noise:

At 108.000MHz. . . . . .80dB below carrier at 100kHz in 1kHz resolution bandwidth.

At 334.700MHz. . . . . .80dB below carrier at 100kHz in 1kHz resolution bandwidth.

Residual FM: (Post-detection noise bandwidth, 20Hz to 15kHz)

At 108.000MHz. . . . . .±200Hz p-p, or less.

At 334.700MHz. . . . . .±400Hz p-p, or less.

(cont'd next page)

5.33 SPECTRAL PURITY TEST FOR NAV-750 (cont'd)

TEST EQUIPMENT: Spectrum Analyzer and Modulation Meter

PROCEDURE:

1. Set NAV-750 controls as follows:

   FREQUENCY. 108.000MHz

   MASTER MOD . . . . . .UNCAL Max ccw (0)

   Output Attenuator. . . . . -10dBm

   NOTE

   All levels are observed with the NAV-750 output attenuator set to -10dBm. However, other levels may be used for convenience to meet test equipment requirements.

2. Connect spectrum analyzer to NAV-750 RF power output connector (J 2).

HARMONICS

3. Set spectrum analyzer frequency span to 100MHz per division and resolution bandwidth to 3MHz.

4. Advance NAV-750 FREQUENCY selector switches in 1MHz steps from 108.000MHz to 157.000MHz and verify that harmonics of all selected frequencies are 30dB, or more, below carrier level.

   -30dBc_____

5. Set FREQUENCY selector switches to 329.000MHz.

6. Advance FREQUENCY selector switches in 1MHz steps from 329.000MHz to 335.000MHz and verify that harmonics af all selected frequencies are 30dB, or more, below carrier level.

   -30dBc_____

CLOSE-IN NOISE (Single-sideband Noise)

7. Set spectrum analyzer to 5kHz per division frequency span, resolution bandwidth to 300Hz, and select 10Hz video filter. Set spectrum analyzer (7L13) RF attenuator to 20dB. Set IF attenuator to full counterclockwise. Position carrier peak to far left vertical graticule. Select 2 dB per division. Rotate IF attenuator for a -70 dBm reference level. This will display single sideband phase noise from 0 to 50 kHz from carrier.

(cont'd next page)

5.33 SPECTRAL PURITY TEST FOR NAV-750 (cont'd)

8. Set NAV-750 FREQUENCY selector switches to 334.700MHz.

9. Verify that close-in noise is 68dB, or more, below carrier level at ±20kHz from 334.700MHz carrier.

-68dBc_____

10. Set FREQUENCY selector switches to 108.000MHz.

11. Verify that close-in noise is 74dB, or more, below carrier at ±20kHz from 108.000MHz carrier.

-74dBc_____

HARMONIC SPURIOUS NOISE

NOTE
The NAV-750 phase-lock control frequency is 12.5kHz.

12. Verify that harmonic spurious noise is 68dB, or more, below carrier level at ±12.5kHz from 108.000MHz carrier.

-68dBc_____

13. Verify that harmonic spurious noise is 71dB, or more, below carrier level at ±25.0 kHz from 108.000MHz carrier.

-71dBc_____

14. Set NAV-750 FREQUENCY selector switches to 334.700MHz.

15. Verify that harmonic spurious noise is 63dB, or more, below carrier level at ±12.5kHz from 334.700MHz carrier.

-63dBc_____

16. Verify that harmonic spurious noise is 74dB, or more, below carrier level at ±25.0kHz from 334.700MHz carrier.

-74dBc_____

BROADBAND NOISE

17. Set spectrum analyzer for 10 kHz per division frequency span, resolution bandwidth to 300Hz, and select 300Hz video filter. Set spectrum analyzer (7L13) RF attenuator to 20dB. Set IF attenuator to full counterclockwise. Position carrier peak to far left vertical graticule. Select 2dB per division. Rotate IF attenuator for a -70dBm reference level. This will display single sideband phase noise from 0 to 100kHz from carrier frequency.

(cont'd next page)

5.33 SPECTRAL PURITY TEST FOR NAV-750 (cont'd)

PROCEDURE:

18. Verify that broadband noise is 80dB, or more, below 334.700MHz carrier level at ±100kHz as stated in a 1 kHz resolution bandwidth.

NOTE

To convert 300Hz bandwidth data to 1kHz bandwidth data, subtract 5.23dB from 300Hz bandwidth data.

-80dBc_____

19. Set NAV-750 FREQUENCY selector switches to 108.000MHz.

20. Verify that broadband noise is 80dB, or more, below 108.000MHz carrier level at ±100kHz as stated in a 1kHz resolution bandwidth.

NOTE

To convert 300Hz bandwidth data to 1kHz bandwidth data, subtract 5.23dB from 300Hz bandwidth data.

-80dBc_____

RESIDUAL FM

21. Disconnect test equipment from NAV-750.

22. Set controls as follows:

All Tone Level Controls. . . . . .UNCAL Max. ccw (0)

Output Attenuator. . . . . .-120 dBm

FREQUENCY. . . . . 118.000 MHz

23. Connect NAV-750 RF power output connector to modulation meter 50 ohm input port.

24. Set Modulation Meter Controls as follows:

kHz Deviation. . . . . .10kHz range

Select . . . . . $\frac{p-p}{2}$

High-Pass Filter . . . . . .10 Hz

Low-Pass Filter. 15kHz

(cont'd next page)

5.33 SPECTRAL PURITY TEST FOR NAV-750 (cont'd)

25. Increase NAV-750 output attenuator to -10 dBm.

26. Modulation meter should indicate less than 200Hz deviation.

<200Hz_____

27. Set FREQUENCY selector switches to 332.000 MHz.

28. Modulation meter should indicate less than 400Hz deviation.

<400Hz_____

5.34 SPECTRAL PURITY TEST FOR NAV-750A

DESCRIPTION: This procedure checks the spectral purity of the NAV-750 using a Spectrum Analyzer.

SPECIFICATIONS:

Harmonics: . . . . . 30dB below carrierm maximum (108.000 through 335.000MHz)

Close-in Noise (Single-sideband Noise):

At 108.000MHz . . . . . 78dB below carrier at ±15kHz in 100Hz resolution bandwidth, or 83dB below carrier at ±15kHz in 100Hz resolution bandwidth.

At 130.000MHz . . . . . 78dB below carrier at ±15kHz in 300Hz resolution bandwidth, or 83dB below carrier at ±15kHz in 100Hz resolution bandwidth.

At 334.700MHz . . . . . 74dB below carrier at ±20kHz in 300Hz resolution bandwidth, or 79dB below carrier at ±20kHz in 100kHz resolution bandwidth.

Harmonic Spurious Noise:

NOTE

The NAV-750A phase-lock control frequency is 12.5kHz.

At 108.000MHz . . . . . 75dB below carrier at ±12.5kHz and 83dB below carrier at ±25.0kHz in 300Hz resolution bandwidth.

At 334.700MHz . . . . . 66dB below carrier at ±12.5kHz and 77dB below carrier at ±25.0kHz in 300Hz resolution bandwidth.

Broadband Noise:

At 108.000MHz . . . . . 82dB below carrier at ±100kHz in 1kHz resolution bandwidth.

At 334.700MHz . . . . . 82dB below carrier at ±100kHz in 1kHz resolution bandwidth.

(cont'd next page)

5.34 SPECTRAL PURITY TEST FOR NAV-750A (cont'd)

SPECIFICATIONS:

Residual FM: (Post-detection noise bandwidth, 20Hz to 15kHz).

At 108.000MHz . . . . . ±200Hz p-p, or less.

At 334.700MHz . . . . . ±400Hz p-p, or less.

TEST EQUIPMENT: Spectrum Analyzer and Modulation Meter

PROCEDURE:

1. Set NAV-750A controls as follows:

   FREQUENCY. 108.000MHz

   MASTER MOD . . . . . .UNCAL Max ccw (0)

   Output Attenuator. . . . . .-10 dBm

   NOTE

   All levels are observed with the NAV-750A output attenuator set to -10dBm. However, other levels may be used for convenience to meet test equipment requirements.

2. Connect spectrum analyzer to NAV-750A RF power output connector (J-3).

HARMONICS

3. Set spectrum analyzer frequency span to 100MHz per division and resolution bandwidth to 3MHz.

4. Advance NAV-750A FREQUENCY selector switches in 1MHz steps from 108.000MHz to 157.000MHz and verify that harmonics of selected frequencies are 30dB, or more, below carrier level.

   -30dBc_____

5. Set FREQUENCY selector switches to 329.000MHz.

6. Advance FREQUENCY selector switches in 1MHz steps from 329.000MHz to 335.000MHz and verify that harmonics of all selected frequencies are 30dB, or more, below carrier level.

   -30dBc_____

(cont'd next page)

5.34 SPECTRAL PURITY TEST FOR NAV-750A (cont'd)

PROCEDURE:

CLOSE-IN NOISE (Single-sideband Noise)

7. Set spectrum analyzer for 5 kHz per division frequency span, resolution bandwidth to 300Hz, and select 10Hz video filter. Set spectrum analyzer (7L13) RF attenuator to 20dB. Set IF attenuator to full counterclockwise. Position carrier peak to far left vertical graticule. Select 2dB per division. Rotate IF attenuator for a -70dBm reference level. This will display signal sideband phase noise from 0 to 50 kHz from carrier frequency.

8. Set NAV-750A FREQUENCY selector switches to 334.700MHz.

9. Verify that close-in noise is 74dB, or more, below carrier at 20 kHz from 334.700MHz carrier.

-74dBc_____

10. Set FREQUENCY selector switches to 130.000MHz.

11. Verify that close-in noise is 78dB, or more, below carrier at ±15kHz from 130.000MHz carrier.

-78dBc_____

12. Set FREQUENCY selector switches to 108.000MHz.

13. Verify that close-in noise is 78dB, or more, below carrier at ±15kHz from 108.000MHz carrier.

-78dBc_____

HARMONIC SPURIOUS NOISE

NOTE

The NAV-750A phase-lock control frequency is 12.5kHz.

14. Verify that harmonic spurious noise is 75dB, or more, below carrier level at ±12.5kHz from 108.000MHz carrier.

-75dBc_____

15. Verify that harmonic spurious noise is 83dB, or more, below carrier level at ±25.0kHz from 108.000MHz carrier.

-83dBc_____

(cont'd next page)

5.34 SPECTRAL PURITY TEST FOR NAV-750A (cont'd)

16. Set FREQUENCY selector switches to 334.700MHz.

17. Verify that harmonic spurious noise is 66dB, or more, below carrier level at ±12.5kHz from 334.700MHz carrier.

-66dBc_____

18. Verify that harmonic spurious noise is 77dB, or more, below carrier level at ±25.0kHz from 334.700MHz carrier.

-77dBc_____

BROADBAND NOISE

19. Set spectrum analyzer for 10kHz per division frequency span, resolution bandwidth to 300Hz, and select 300Hz video filter. Set spectrum analyzer (7L13) RF attenuator to 20dB. Set IF attenuator to full counterclockwise. Position carrier peak to far left vertical graticule. Select 2dB per division. Rotate IF attenuator for a -70dBm reference level. This will display single sideband phase noise from 0 to 100kHz from carrier.

20. Verify that broadband noise is 82dB, or more, below 334.700MHz carrier level at ±100kHz as stated in a 1kHz resolution bandwidth.

NOTE

To convert 300Hz bandwidth data to 1kHz bandwidth data, subtract 5.23dB from 300Hz bandwidth data.

-82dBc_____

21. Set NAV-750A FREQUENCY selector switches to 108.000MHz.

22. Verify that broadband noise is 82dB, or more, below 108.000MHz carrier level at ±100kHz as stated in a 1kHz resolution bandwidth.

NOTE

To convert 300Hz bandwidth data to 1kHz bandwidth data, subtract 5.23dB from 300Hz bandwidth data.

-82dBc_____

5.34 SPECTRAL PURITY TEST FOR NAV-750A (cont'd)

RESIDUAL FM

23. Disconnect test equipment and set controls as follows:

All Tone Level Controls. . . . . .UNCAL Max. ccw (0)

Output Attenuator. . . . . .-120 dBm

Frequency. . . . . 118.000 MHz

24. Connect NAV-750 power output connector to modulation meter 50 ohm input port.

25. Set Modulation Meter Controls as follows:

kHz Deviation. . . . . .10 kHz range

Select . . . . . $\frac{p-p}{2}$

High-Pass Filter . . . . . 10 Hz

Low-Pass Filter. 15kHz

26. Increase NAV-750 output attenuator to -10 dBm.

27. Modulation meter should indicate less than 200Hz deviation.

<200 Hz_____

28. Set FREQUENCY selector switches to 332.000MHz.

29. Modulation meter should indicate less than 400Hz deviation.

<400 Hz_____

5.35 SPECTRAL PURITY TEST FOR NAV-750B

DESCRIPTION: This procedure checks the spectral purity of the NAV-750B using a Spectral Analyzer.

SPECFICATIONS:

Harmonics:. . . . . 30dB below carrier, maximum, from 108.000 through 335.000MHz and 20dB below carrier, maximum, from 70.000 through 79.000MHz.

Close-in Noise (Single-sideband Noise):

At 108.000MHz. . . . . .78dB below carrier at ±15kHz in 300Hz resolution bandwidth, or 83dB below carrier at ±15kHz in 100Hz resolution bandwidth.

At 130.000MHz. . . . . .78dB below carrier at ±15kHz in 300Hz resolution bandwidth, or 83dB below carrier at ±15kHz in 100Hz resolution bandwidth.

At 334.700MHz. . . . . .74dB below carrier at ±20kHz in 300Hz resolution bandwidth, or 79dB below carrier at ±20kHz in 100Hz resolution bandwidth.

Harmonic Spurious Noise:

NOTE

The NAV-750B phase-lock control frequency is 12.5kHz.

At 108.000MHz. . . . . .75dB below carrier at ±12.5kHz and 83dB below carrier at ±25.0 kHz in 300Hz resolution bandwidth.

At 334.700MHz. . . . . .75dB below carrier at ±12.5kHz and 83dB below carrier at ±25.0 kHz in 300Hz resolution bandwidth.

Broadband Noise:

At 108.000MHz. . . . . .80dB below carrier at ±100kHz in 1kHz resolution bandwidth.

At 334.700MHz. . . . . .80dB below carrier at ±100kHz in 1kHz resolution bandwidth.

(cont'd next page)

5.35 SPECTRAL PURITY TEST FOR NAV-750B (cont'd)

SPECIFICATIONS:

Residual FM: (Post-detection noise bandwidth, 20Hz to 15kHz)

At 108.000MHz. . . . . ±200Hz p-p, or less.

At 334.700MHz. . . . . ±400Hz p-p, or less.

TEST EQUIPMENT: Spectrum Analyzer and Modulation Meter

PROCEDURE:

1. Set NAV-750B controls as follows:

   FREQUENCY. 70.000MHz

   MASTER MOD . . . . . .UNCAL Max ccw (0)

   Output Attenuator. . . . . .-10 dBm

   NOTE

   All levels are observed with the NAV-750 output attenuator set to -10dBm. However other levels may be used for convenience to meet test equipment requirements.

2. Connect spectrum analyzer to NAV-750B RF power output connector (J-3).

HARMONICS

3. Set spectrum analyzer frequency span to 100MHz per division and resolution bandwidth to 3MHz.

4. Advance NAV-750B FREQUENCY selector switches in 1MHz steps from 70.000MHz to 79.000MHz and verify that harmonics of selected frequencies are 20dB, or more, below carrier level.

   -20dBc_____

5. Set FREQUENCY selector switches to 108.000MHz.

6. Advance FREQUENCY selector switches in 1MHz steps from 108.000MHz to 157.000MHz and verify that harmonics of all selected frequencies are 30dB, or more, below carrier level.

   -30dBc_____

(cont'd next page)

5.35 SPECTRAL PURITY TEST FOR NAV-750B (cont'd)

PROCEDURE:

7. Set FREQUENCY selector switches to 329.000MHz.

8. Advance FREQUENCY selector switches in 1MHz steps from 329.000MHz to 335.000MHz and verify that harmonics of all selected frequencies are 30dB, or more, below carrier level.

-30dBc_____

CLOSE-IN NOISE (Single-sideband Noise);

9. Set spectrum analyzer for 5kHz per division frequency span, resolution bandwidth to 300Hz, and select 10Hz video filter. Set spectrum analyzer (7L13) RF attenuator to 20dB. Set IF attenuator to full counterclockwise. Position carrier peak to far left vertical graticule. Select 2dB per division. Rotate IF attenuator for a -70dBm reference level. This will display single sideband phase noise from 0 to 50 kHz from carrier frequency.

10. Set NAV-750B FREQUENCY selector switches to 334.700MHz.

11. Verify that close-in noise is 74dB, or more, below carrier level at ±20kHz from 334.700MHz carrier.

-74dBc_____

12. Set FREQUENCY selector switches to 130.000MHz.

13. Verify that close-in noise is 78dB, or more, below carrier level at ±15kHz from 130.000MHz carrier.

-78dBc_____

14. Set FREQUENCY selector switches to 108.000MHz.

15. Verify that close-in noise is 78dB, or more, below carrier level at ±15kHz from 108.000MHz carrier.

-78dBc_____

16. Set FREQUENCY selector switches to 75.000MHz.

17. Verify that close-in noise is 78dB, or more, below carrier level at ±15kHz from 75.000MHz carrier.

-78dBc_____

(cont'd next page)

5.35 SPECTRAL PURITY TEST FOR NAV-750B (cont'd)

PROCEDURE:

HARMONIC SPURIOUS NOISE:

NOTE

The NAV-750B phase-lock control frequency is 12.5kHz.

18. Set NAV-750B FREQUENCY selector to 108.000MHz.

19. Verify that harmonic spurious noise is 75dB, or more, below carrier level at ±12.5kHz from 108.000MHz carrier.

-75dBc_____

20. Verify that harmonic spurious noise is 83dB, or more, below carrier at ±25.0kHz from 108.000MHz carrier.

-83dBc_____

21. Set FREQUENCY selector switches to 334.700MHz.

22. Verify that harmonic spurious noise is 75dB, or more, below carrier at ±25.0kHz from 334.700MHz carrier.

-75dBc_____

23. Verify that harmonic spurious noise is 83dB, or more, below carrier at ±25.0kHz from 334.700MHz carrier.

-83dBc_____

BROADBAND NOISE

24. Set spectrum analyzer for 10kHz per division frequency span, resolution bandwidth to 300Hz, and select 300Hz video filter. Set spectrum analyzer (7L13) RF attenuator to 20dB. Set IF attenuator to full counterclockwise. Position carrier peak to far left vertical graticule. Select 2dB per division. Rotate IF attenuator for a -70 dBm reference level. This will display single sideband phase noise from 0 to 100kHz from carrier frequency.

25. Verify that broadband noise is 80dB, or more, below 334.700MHz carrier level at ±100kHz as stated in a 1kHz resolution bandwidth.

(cont'd next page)

5.35 SPECTRAL PURITY TEST FOR NAV-750B (cont'd)

PROCEDURE:

NOTE

To convert 300Hz bandwidth data to 1kHz bandwidth. data, subtract 5.23dB from 300Hz bandwidth data.

-80dBc_____

26. Set NAV-750B FREQUENCY selector switches to 108.000MHz.

27. Verify that broadband noise is 80dB, or more, below 108.000MHz carrier level at ±100kHz as stated in a 1kHz resolution bandwidth.

NOTE

To convert 300Hz bandwidth data to 1kHz bandwidth data, subtract 5.23dB from 300Hz bandwidth data.

-80dBc_____

RESIDUAL FM

28. Disconnect test equipment from NAV-750.

29. Set controls as follows:

All Tone Level Controls. . . . . UNCAL Max. ccw (0)

Output Attenuator. . . . . -120 dBm

FREQUENCY. 118.000MHz

30. Connect NAV-750 RF power output connector to modulation meter 50 ohm input port.

31. Set Modulation Meter controls as follows:

kHz Deviation. . . . . .10kHz range

Select . . . . . $\frac{p-p}{2}$

High-Pass Filter . . . . . .10 Hz

Low-Pass Filter. 15kHz

32. Increase NAV-750 output attenuator to -10 dBm.

(cont'd next page)

5.35 SPECTRAL PURITY TEST FOR NAV-750B (cont'd)

PROCEDURE:

33. Modulation meter should indicate less than 200Hz deviation.

<200Hz_____

34. Set FREQUENCY selector switches to 332.000MHz.

35. Modulation meter should indicate less than 400Hz deviation.

<400Hz_____

PERFORMANCE EVALUATION TEST DATA SHEET

5.7 METER MECHANICAL ZERO CHECK AND ADJUSTMENT _____(✓)

5.8 INITIAL PROCEDURE Record Line Vac_____

5.9 MANUAL FREQUENCY ADVANCE

5.9.2 Ø Lock indicator on and correct frequency display at 108.100 MHz, 108.125 MHz, 108.150 MHz and 108.175 MHz. _____(✓)

5.9.4
a) Ø Lock indicator at all frequencies _____(✓)
b) Frequency display _____(✓)
c) VOR mode indicator _____(✓)
d) LOC mode indicator _____(✓)
e) G/S mode indicator _____(✓)
G/S-LOC paired frequencies _____(✓)
f) End channeling indicator at 117.950 MHz, 135.975 MHz, and 157.950 MHz. _____(✓)

5.9.6
a) Ø Lock indicator on from 329.000 MHz to 335.975MHz. _____(✓)
b) Frequency display from 329.000MHz to 335.975 MHz. _____(✓)
c) End channeling indicator ON at 335.975MHz _____(✓)

5.9.8
a) Frequency display correct between 70.000 MHz to 79.975 MHz (NAV-750B). _____(✓)
b) Ø Lock indicator on between 70.000MHz to 79.975 MHz (NAV-750B). _____(✓)

5.10 AUTOMATIC FREQUENCY CHANNELING

5.10.5 Frequency display increases in 25kHz increments. _____(✓)

5.10.6 Channeling rate control stops channeling. _____(✓)

5.10.7 Frequency display in 50, 100, and 200 kHz increments. _____(✓)
Channel rate control stops frequency channeling. _____(✓)

5.10.8 Channeling rate, 4 per sec. or less. _____per sec.

5.10.11 100kHz maximum channeling rate _____(✓)

5.10.12 End channeling and indicator ON at 117.950MHz _____(✓)

5.10.16 End channeling and indicator ON at 135.975MHz _____(✓)

5.10.20 End channeling and indicator ON at 157.950MHz _____(✓)

5.10.24 End channeling and indicator ON at 335.975MHz _____(✓)

5.10.27 Channeling stops in MANUAL, display is 329.000MHz. _____(✓)

5.11 AUTOMATIC FREQUENCY CHANNELING (Atlernate procedure using AE-700)

5.11.9 Frequency display increases in 25kHz steps. _____(✓)

5.11.10 AE-700 Frequency and code display correct. _____(✓)

5.11.13 NAV-750 & AE-700 frequency increase in 25kHz steps. _____(✓)

5.11.14 Channel rate control stops frequency channeling. _____(✓)

5.11.15 NAV-750 & AE-700 frequency increase in the following increments:
50kHz _____(✓)
100kHz _____(✓)
200kHz _____(✓)

5.11.16 Channeling rate, 4 per sec, or less. _____per sec.

5.11.21 BCD code . _____(✓)

5.11.22 Channeling stops at 117.950 and NAV-750 and AE-700 indicators come ON. _____(✓)

5.11.26 End channeling and indicators ON at 135.975MHz _____(✓)

5.11.29 BCD code _____(✓)

5.11.30 End channeling and indicators ON at 157.950MHz _____(✓)

5.11.33 NAV-750 & AE-700 display 108.000 MHz. _____(✓)

5.11.35 ARINC code _____(✓)

5.12 ATTENUATOR CALIBRATION AND FREQUENCY RESPONSE TEST

5.12.4 Power output between 108.000MHz and 157.000MHz.

-31.5 dBm _____ -28.5 dBm

5.12.6 Power output between 328.000MHz and 335.000MHz.

-31.5 dBm _____ -28.5 dBm

5.12.8 Power output between 70.000MHz and 79.000MHz (NAV-750B)

-31.5 dBm_____-28.5 dBm

5.13 DEMOD TONES AND DC OFFSET

5.13.6 Tone is 90 Hz (LOC) _____(✓)

5.13.7 DC Offset -40mVdc_____+40mVdc

5.13.9 Tone is 90 Hz (G/S) _____(✓)

5.13.10 DC Offset -40mVdc_____+40mVdc

5.13.12 Tone is 150 Hz (G/S) _____(✓)

5.13.13 DC Offset -40mVdc_____+40mVdc

5.13.15 Tone is 150 Hz (LOC) _____(✓)

5.13.16 DC Offset -40mVdc_____+40mVdc

5.13.19 Tone is 9960 Hz FM at 30Hz (VOR) _____(✓)

5.13.20 DC Offset -40mVdc_____+40mVdc

5.13.22 Tone is 30Hz (VOR) _____(✓)

5.13.23 DC Offset -40mVdc_____+40mVdc

5.13.26 Tone is 1020Hz (Comm) _____(✓)

5.13.27 DC Offset -40mVdc_____+40mVdc

5.13.29 Tone is 400Hz (NAV-750B only) _____(✓)

5.13.30 DC Offset -80mVdc_____+80mVdc

5.13.32 Tone is 1300Hz (NAV-750B only) _____(✓)

5.13.33 DC Offset -80mVdc_____+80mVdc

5.13.35 Tone is 3000Hz (NAV-750B only) _____(✓)

5.13.36 DC Offset -80mVdc_____+80mVdc

5.14 TONE DISTORTION AND FREQUENCY

5.14.3 30Hz REF. distortion 0%_____0.5%

5.14.5	30Hz REF. frequency	29.994Hz	30.006Hz
5.14.11	90Hz (LOC) distortion	0%	0.4%
5.14.12	90Hz (LOC) frequency	89.982Hz	90.018Hz
5.14.14	90Hz (G/S) distortion	0%	0.4%
5.14.15	90Hz (G/S) frequency	89.982Hz	90.018Hz
5.14.17	150Hz (G/S) distortion	0%	0.4%
5.14.18	150Hz (G/S) frequency	149.97Hz	150.03Hz
5.14.20	150Hz (LOC) distortion	0%	0.4%
5.14.21	150Hz (LOC) frequency	149.97Hz	150.03Hz
5.14.27	9960Hz Tone with 30Hz FM	ΔT = 46.1µs	50.9µs
5.14.28	9960Hz frequency	9958.008Hz	9961.992Hz
5.14.32	30Hz(VAR) distortion	0%	0.5%
5.14.33	30Hz (VAR) frequency	29.994Hz	30.006Hz
5.14.36	1020Hz (Comm) distortion	0%	0.5%
5.14.37	1020Hz (Comm) frequency	1014.9Hz	1025.1Hz
5.14.40	400Hz (Mkr. Bcn) distortion (NAV-750B)	0%	0.7%
5.14.41	400Hz (Mkr. Bcn) frequency	497.2Hz	402.8Hz
5.14.43	1300Hz (Mkr. Bcn) distortion (NAV-750B)	0%	0.7%
5.14.44	1300Hz (Mkr. Bcn) frequency	1290.9Hz	1309.1Hz
5.14.46	3000Hz (Mkr. Bcn) distortion (NAV-750B)	0%	0.7%
5.14.47	3000Hz (Mkr. Bcn) frequency	2779.0Hz	3021.0Hz

5.15 EXTERNAL MODUALTION

5.15.3	Meter indication	28.5%	31.5%

5.16 EXTERNAL MODULATION

5.16.3	Meter indication	85.5%	94.5%

5.17	VOR BEARING GENERATOR	
5.17.3	Display indicates 0.00 degrees	_____(✓)
5.17.4	Display indicates selected bearings	_____(✓)
5.17.5	+10° bearing change	_____(✓)
5.17.6	-10° bearing change	_____(✓)
5.17.9	.01° bearing change	_____(✓)
5.17.11	.05° bearing change	_____(✓)

5.18	AMPLITUDE MODULATION DEPTH MEASUREMENT	
5.18.3	VOR 30Hz tone	28.8%_____31.2%
5.18.6	VOR 9960Hz tone	28.8%_____31.2%
5.18.10	LOC 90Hz tone	19.2%_____20.8%
5.18.12	LOC 150Hz tone	19.2%_____20.8%
5.18.16	G/S 90Hz tone	38.4%_____41.6%
5.18.18	G/S 150Hz tone	38.4%_____41.6%
5.18.21	Comm 1020Hz tone	28.8%_____31.2%

5.18A	AMPLITUDE MODULATION DEPTH MEASUREMENT (Alternate Method)	
5.18A.5	V_{off}	_____mV dc
5.18A.11	VOR 30Hz tone	28.8%_____31.2%
5.18A.15	VOR 9960Hz tone	28.8%_____31.2%
5.18A.20	LOC 90Hz tone	19.2%_____20.8%
5.18A.23	LOC 150Hz tone	19.2%_____20.8%
5.18A.28	G/S 90Hz tone	38.4%_____41.6%
5.18A.31	G/S 150Hz tone	38.4%_____41.6%
5.18A 35	Comm 1020Hz tone	28.8%_____31.2%

5.19 AMPLITUDE MODULATION DEPTH MEASUREMENT FOR NAV-750B MARKER BEACON TONES

5.19.3	400Hz tone	92.15% _____	97.85%
5.19.5	1300Hz tone	92.15% _____	97.85%
5.19.7	3000Hz tone	92.15% _____	97.85%

5.20 METER MODULATION SCALE TEST

5.20.2	Record 30% Mod. measured value	_____%
5.20.3	Measured value, ±1.2% Modulation	_____%
5.20.4	Record 20% Mod. measured value	_____%
5.20.7	Measured value, ±0.8% Modulation	_____%
5.20.9	Record 40% Mod. measured value	_____%
5.20.13	Measured value, ±1.6% Modulation	_____%
5.20.16	Record 95% Mod. measured value	_____%
5.20.19	Measured value, ±2.85% Modulation	_____%

5.21 METER RF LEVEL SCALE TEST

5.21.2	1½ needle widths at 108.000MHz.	_____(✓)
5.21.3	1½ needle widths to 335.000MHz.	_____(✓)
5.21.5	1½ needle widths from 72.0 to 78.000MHz.	_____(✓)

5.22 VOR BEARING ACCURACY TEST

5.22.9	0° TO bearing error	-0.05° _____	+0.05°
5.22.12	0° FROM bearing error	-0.05° _____	+0.05°
5.22.16	180° TO bearing error	-0.05° _____	+0.05°
5.22.19	180° FROM bearing error	-0.05° _____	+0.05°
5.22.23	90° TO bearing error	-0.05° _____	+0.05°
5.22.26	90° FROM bearing error	-0.05° _____	+0.05°

5.22	VOR BEARING ACCURACY TEST (cont'd)	
5.22.30	270° TO bearing error	-0.05°_____+0.05°
5.22.33	270° FROM bearing error	-0.05°_____+0.05°
5.23	LOC CENTERING SIGNAL TEST	
5.23.4	150Hz DEMOD voltage	_____Vrms
5.23.6	90Hz DEMOD voltage	_____Vrms
5.23.7	Standard NAV-750, centering signal NAV-750A/B, centering signal	-1mV_____+1mV -0.27mV_____+0.27mV
5.24	LOC TONE RATIO TEST (NAV-750 only)	
	.093 DDM CHECK	
5.24.5	90Hz DEMOD voltage	_____Vrms
5.24.7	150Hz DEMOD voltage	_____Vrms
5.24.9	Right .093 DDM voltage ratio	1.596_____1.616
5.24.11	150Hz DEMOD voltage	_____Vrms
5.24.13	90Hz DEMOD voltage	_____Vrms
5.24.15	Left .093 DDM voltage ratio	1.596_____1.616
	.155 DDM CHECK	
5.24.17	90Hz DEMOD voltage	_____Vrms
5.24.19	150Hz DEMOD voltage	_____Vrms
5.24.21	Right .155 DDM voltage ratio	2.240_____2.290
5.24.23	150Hz DEMOD voltage	_____Vrms
5.24.25	90Hz DEMOD voltage	_____Vrms
5.24.27	Left .155 DDM voltage ratio	2.240_____2.290

5.24 LOC TONE RATIO TEST (NAV-750 only) (cont'd)

.200 DDM CHECK

5.24.29 90Hz DEMOD voltage _____Vrms

5.24.31 150Hz DEMOD voltage _____Vrms

5.24.33 Right .200 DDM voltage ratio 2.951_____3.051

5.24.35 150Hz DEMOD voltage _____Vrms

5.24.37 90Hz DEMOD voltage _____Vrms

5.24.39 Left .200 DDM voltage ratio 2.951_____3.051

5.25 LOC TONE RATIO TEST (NAV-750A and B only)

.046 DDM CHECK

5.25.5 90Hz DEMOD voltage _____Vrms

5.25.7 150Hz DEMOD voltage _____Vrms

5.25.9 Right .046 DDM voltage ratio 1.2583_____1.2615

5.25.11 150Hz DEMOD voltage _____Vrms

5.25.13 90Hz DEMOD voltage _____Vrms

5.25.15 Left .046 DDM voltage ratio 1.2583_____1.2615

.093 DDM CHECK

5.25.17 90Hz DEMOD voltage _____Vrms

5.25.19 150Hz DEMOD voltage _____Vrms

5.25.21 Right .093 DDM voltage ratio 1.6037_____1.6080

5.25.23 150Hz DEMOD voltage _____Vrms

5.25.25 90Hz DEMOD voltage _____Vrms

5.25.27 Left .093 DDM voltage ratio 1.6037_____1.6080

5.25 LOC TONE RATIO TEST (NAV-750A and B only) (cont'd)

.155 DDM CHECK

5.25.29 90Hz DEMOD voltage _____Vrms

5.25.31 150Hz DEMOD voltage _____Vrms

5.25.33 Right .155 DDM voltage ratio 2.2603_____2.2703

5.25.35 150Hz DEMOD voltage _____Vrms

5.25.37 90Hz DEMOD voltage _____Vrms

5.25.39 Left .155 DDM voltage ratio 2.2603_____2.2703

.200 DDM CHECK

5.25.41 90Hz DEMOD voltage _____Vrms

5.25.43 150Hz DEMOD voltage _____Vrms

5.25.45 Right .200 DDM voltage ratio 2.9925_____3.0075

5.25.47 150Hz DEMOD voltage _____Vrms

5.25.49 90Hz DEMOD voltage _____Vrms

5.25.51 Left .200 DDM voltage ratio 2.9925_____3.0075

5.26 G/S CENTERING TEST

5.26.4 150Hz DEMOD voltage _____Vrms

5.26.6 90Hz DEMOD voltage _____Vrms

5.26.7 Standard NAV-750 centering signal -1mV_____+1mV
NAV-750 A/B, centering signal -0.27mV_____+0.27mV

5.27 G/S TONE RATIO TEST (NAV-750 only)

.091 DDM CHECK

5.25.5 90Hz DEMOD voltage _____Vrms

5.27.7 150Hz DEMOD voltage _____Vrms

5.27 G/S TONE RATIO TEST (NAV-750 only) (cont'd)

5.27.9 Left .091 DDM voltage ratio 1.253_____1.260

5.27.11 150Hz DEMOD voltage _____Vrms

5.27.13 90Hz DEMOD voltage _____Vrms

5.27.15 Right .091 DDM voltage ratio 1.253_____1.260

.175 DDM CHECK

5.27.17 90Hz DEMOD voltage _____Vrms

5.27.19 150Hz DEMOD voltage _____Vrms

5.27.21 Left .175 DDM voltage ratio 1.550_____1.570

5.27.23 150Hz DEMOD voltage _____Vrms

5.27.25 90Hz DEMOD voltage _____Vrms

5.27.27 Right .175 DDM voltage ratio 1.550_____1.570

.400 DDM CHECK

5.27.29 90Hz DEMOD voltage _____Vrms

5.27.31 150Hz DEMOD voltage _____Vrms

5.27.33 Left .400 DEMOD voltage ratio 2.951_____3.051

5.27.35 150Hz DEMOD voltage _____Vrms

5.27.37 90Hz DEMOD votlage _____Vrms

5.27.39 Right .400 DEMOD voltage ratio 2.951_____3.051

5.28 G/S TONE RATIO TEST (NAV-750A and B only)

.045 DDM CHECK

5.28.5 90Hz DEMOD voltage _____Vrms

5.28.7 150Hz DEMOD voltage _____Vrms

5.28.9 Left .045 DDM voltage ratio 1.1185_____1.1199

5.28 G/S TONE RATIO TEST (NAV-750A and B) (cont'd)

.045 DDM CHECK

5.28.11 150Hz DEMOD voltage _____Vrms

5.28.13 90Hz DEMOD voltage _____Vrms

5.28.15 Right .045 DDM voltage ratio 1.1185_____1.1199

.091 DDM CHECK

5.28.17 90Hz DEMOD voltage _____Vrms

5.28.19 150Hz DEMOD voltage _____Vrms

5.28.21 Left .091 DDM voltage ratio 1.2559_____1.2575

5.28.23 150Hz DEMOD voltage _____Vrms

5.28.25 90Hz DEMOD voltage _____Vrms

5.28.27 Right .091 DDM voltage ratio 1.2559_____1.2575

.175 DDM CHECK

5.28.29 90Hz DEMOD voltage _____Vrms

5.28.31 150Hz DEMOD voltage _____Vrms

5.28.33 Left .175 DDM voltage ratio 1.5585_____1.5615

5.28.35 150Hz DEMOD voltage _____Vrms

5.28.37 90Hz DEMOD voltage _____Vrms

5.28.39 Right .175 DDM voltage ratio 1.5585_____1.5615

.400 DDM CHECK

5.28.41 90Hz DEMOD voltage _____Vrms

5.28.43 150Hz DEMOD voltage _____Vrms

5.28.45 Left .400 DDM voltage ratio 2.9963_____3.0037

5.28.47 150Hz DEMOD voltage _____Vrms

5.28.49 90Hz DEMOD voltage _____Vrms

5.28.51 Right .400 DDM voltage ratio 2.9963_____3.0037

5.29 150Hz TONE PHASE TEST

5.29.6 Phase shift between 90Hz and 150Hz increases _____(✓)

5.30 RF FREQUENCY TEST

5.30.5 RF output frequency 109.9999MHz_____110.0001MHz

5.31 ΔF OPERATION TEST

5.31.3 ΔF cw, ΔF ≥ 50kHz, display = _____108 450 MHz
ΔF ccw, ΔF ≥ 50 kHz, display = _____108 550 MHz

5.31.6 ΔF cw, ΔF ≥ 150kHz, display = _____329.850 MHz
ΔF ccw, ΔF ≥150kHz, display = _____330.150 MHz

5.31.9 ΔF cw, ΔF ≥ 30kHz, display = _____71.970 MHz
ΔF ccw, ΔF ≥ 30kHz, display = _____72.030 MHz

5.32 METER ZERO AND BEARING ERROR TEST

5.32.5 Bearing zero control _____(✓)

5.32.6 Meter needle drift check _____(✓)

5.32.9 Meter indication at BRG position -0.05°_____+0.05°

5.32.11 Meter indication returns to 0°. -0.05°_____+0.05°

5.32.13 Meter indication at 270° FROM. -0.05°_____+0.05°

5.32.15 Meter indication at 270° TO. -0.05°_____+0.05°

5.33 SPECTRAL PURITY TEST FOR NAV-750

HARMONICS

5.33.4 108.000MHz through 157.000MHz -30dBc_____

5.33.6 329.000MHz through 335.000MHz -30dBc_____

CLOSE-IN NOISE

5.33.9 At ±20 kHz from 334.700MHz -68dBc_____

5.33.11 At ±20 kHz from 108.000MHz -74dBc_____

	HARMONIC SPURIOUS NOISE	
5.33.12	At ±12.5kHz from 108.000MHz	-68dBc_____
5.33.13	At ±25 kHz from 108.000MHz	-71dBc_____
5.33.15	At ±12.5kHz from 334.700MHz	-63dBc_____
5.33.16	At ±25 kHz from 334.700MHz	-74dBc_____
	BROADBAND NOISE	
5.33.18	At ±100kHz from 334.700MHz	-80dBc_____
5.33.20	At ±100 kHz from 108.000MHz	-80dBc_____
	RESIDUAL FM	
5.33.26	Residual FM at 118.000MHz	<200Hz_____
5.33.28	Residual FM at 332.000MHz	<400Hz_____
5.34	SPECTRAL PURITY TEST FOR NAV-750A	
	HARMONICS	
5.34.4	108.000MHz through 157.000MHz	-30dBc_____
5.34.6	329.000MHz through 335.000MHz	-30dBc_____
	CLOSE-IN NOISE	
5.34.9	At ±20kHz from 334.700MHz	-74dBc_____
5.34.11	At ±15kHz from 130.000MHz	-78dBc_____
5.34.13	At ±15kHz from 108.000MHz	-78dBc_____
	HARMONIC SPURIOUS NOISE	
5.34.14	At ±12.5kHz from 108.000MHz	-75dBc_____
5.34.15	At ±25kHz from 108.000MHz	-83dBc_____
5.34.17	At ±12.5kHz from 334.700MHz	-66dBc_____
5.34.18	At ±25kHz from 334.700MHz	-77dBc_____

	BROADBAND NOISE	
5.34.20	At ±100kHz from 334.700MHz	-82dBc_____
5.34.22	At ±100kHz from 108.000MHz	-82dBc_____
	RESIDUAL FM	
5.34.27	Residual FM at 118.000MHz	<200Hz_____
5.34.29	Residual FM at 332.000MHz	<400Hz_____
5.35	SPECTRAL PURITY TEST FOR NAV-750B	
	HARMONICS	
5.34.4	70.000MHz through 79.000MHz	-20dBc_____
5.34.6	108.000MHz through 157.000MHz	-30dBc_____
5.34.8	329.000MHz through 335.000MHz	-30dBc_____
	CLOSE-IN NOISE	
5.35.11	At ±20kHz from 334.000MHz	-74dBc_____
5.35.13	At ±15kHz from 130.000MHz	-78dBc_____
5.35.15	At ±15kHz from 108.000MHz	-78dBc_____
5.35.17	At ±15kHz from 75.000MHz	-78dBc_____
	HARMONIC SPURIOUS NOISE	
5.35.19	At ±12.5kHz from 108.000MHz	-75dBc_____
5.35.20	At ±25kHz from 108.000MHz	-83dBc_____
5.35.22	At ±12.5kHz from 334.700MHz	-75dBc_____
5.35.23	At ±25kHz from 334.700MHz	-83dBc_____
	BROADBAND NOISE	
5.35.25	At ±100kHz from 334.700MHz	-80dBc_____
5.35.27	At ±100kHz from 108.000MHz	-80dBc_____

PERFORMANCE EVALUATION TEST DATA SHEET

RESIDUAL FM

5.35.33	Residual FM at 118.000MHz	<200Hz_____
5.35.35	Residual FM at 332.000MHz	<400Hz_____

5.36 SHORT FORM PERFORMANCE TESTS FOR MODEL NAV-750, NAV-750A, AND NAV-750B, BENCH TEST SETS.

DESCRIPTION: The following is a set of procedures designed to validate the performance of the NAV-750 series bench test sets when there has been no failure noted or calibration performed in the RF or modulator systems. Each step in this procedure refers to PERFORMANCE TESTS, or specifies steps to be performed. A SHORT FORM TEST DATA sheet is included for recording measured data.

Initial Procedure

1. Perform the Meter Zero check (5.7) and the Initial Procedure (5.8) for control settings and power application.
   Meter Zero_____(✓) Record Line Vac_____

30Hz and 150Hz Distortion and Frequency and 9960Hz Deviation

2. Perform the following steps of Tone Distortion and Frequency Performance Test (5.14):

   Steps 1 through 5 for 30Hz Tone Distortion and Frequency test.

	_____	0.5% Max
29.994Hz	_____	30.006Hz

   Steps 6 through 12 and steps 16 through 18 for 90 and 150Hz Tone Distortion and Frequency test.

Distortion	_____	(0.4% Max)	Distortion	_____	(0.4% Max)
89.982Hz	_____	9961.992Hz	149.97Hz	_____	150.03Hz

   Steps 22 through 28 for 9960Hz Tone Deviation and Frequency test.

46.1µs	_____	50.9µs
9958.008Hz	_____	9961.992Hz

LOC Centering

3. Perform the LOC Centering Signal Test (5.23).

Standard NAV-750	-1mV	_____	+1mV
NAV-750A and B	-0.27mV	_____	+0.27mV

G/S Centering

4. Perform the G/S Centering Signal Test (5.26).

Standard NAV-750	-1mV	_____	+1mV
NAV-750A and B	-0.27mV	_____	+0.27mV

(Cont'd next page)

5.36 PERFORMANCE TEST (cont'd)

1020Hz Tone Frequency

5. Perform the following steps of Tone Distortion and Frequency test (5.14):

Steps 1, 9, 10, 35, 36, and 37 for 1020Hz distortion and frequency test.

1020Hz Distortion		0.5% Max.
Frequency	1014.9Hz	1025.5Hz

RF Frequency at 110MHz

6. Perform RF Frequency test (5.30).

109.9999 MHz	110.0001 MHz

% Modulation

7. Perform Amplitude Modulation Depth Measurement (5.18 or 5.18A)

Freq.	Tone	Modulation	Measured Value
108.0 MHz	30 Hz	30%	28.8% 31.2%
108.0 MHz	9960 Hz	30%	28.8% 31.2%
108.1 MHz	90 Hz	20%	19.2% 20.8%
108.1 MHz	150 Hz	20%	19.2% 20.8%
334.7 MHz	90 Hz	40%	38.4% 41.6%
334.7 MHz	150 Hz	40%	38.4% 41.6%
118.0 MHz	1020 Hz	30%	28.8% 31.2%

% Modulation (For NAV-750B only)

8. Perform Amplitude Modulation Depth Measurement Procedure for NAV-750B Marker Tones (5.19)

Freq.	Tone	Modulation	Measured Value
75 MHz	400 Hz	95%	92.15% 97.85%
75 MHz	1300 Hz	95%	92.15% 97.85%
75 MHz	3000 Hz	95%	92.15% 97.85%

Meter Modulation Scale

9. Perform Meter Modulation Scale Test (5.20)

Measured Value (from Step 7)	Meter Modulation Scale
30%_____	_____ ±1.2 % Mod.
20%_____	_____ ±0.8 % Mod.
40%_____	_____ ±1.6 % Mod.
95%_____	_____ ±2.85% Mod.

(cont'd next page)

5.36 PERFORMANCE TEST (cont'd)

Output Power

10. Perform Attenuator Calibration and Frequency Response Test (5.12) for the following listed frequencies:

Freq.	Pwr (-30 dBm ±1.5 dBm)
108.0 MHz	_____
118.0 MHz	_____
128.0 MHz	_____
138.0 MHz	_____
148.0 MHz	_____
158.0 MHz	_____
334.7 MHz	_____

Meter RF Level Scale

11. Perform Meter RF Level Scale Test (5.21).

_____(✓)

VOR Bearing Accuracy

12. Perform steps 1 through 12 and 20 through 26 of VOR Bearing Accuracy Test (5.22)

0° "TO"	- 0.05° _____	+0.05°
0° "From"	- 0.05° _____	+0.05°
90° "TO"	- 0.05° _____	+0.05°
90° "From"	- 0.05° _____	+0.05°

Internal Bearing Check

13. Perform Meter Zero and Bearing Error Test (5.32)

_____(✓)

Full Scale Bearing Deviation Check.

14. Perform Full Scale Bearing Deviation Check as follows:

1. Press 90° VOR Bearing Select Pushbutton.
2. Rotate variable BEARING control counterclockwise until bearing display is 89.50°. Meter should indicate -0.5° bearing deviation (±0.05°)

-0.45° _____ -0.55°

3. Rotate variable BEARING control clockwise until bearing display is 90.50°. Meter should indicate +0.5° bearing deviation (±0.05°).

+0.45° _____ +0.55°

(cont'd next page)

5.36 PERFORMANCE TEST (cont'd)

Counter Check

15. Perform steps 1, 2 and 7 through 11 of VOR Bearing Generator Test (5.17).

0.01° Variation_____(✓)
0.05° Variation_____(✓)

DEMOD TONES and DC Offset

16. Perform DEMOD Tones and DC Offset test (5.13) to check tone selection and dc offset.

LOC Tones_____(✓)
dc offset -40mV_____+40mV
G/S Tones_____(✓)
dc offset -40mV_____+40mV
VOR Tones_____(✓)
dc offset -40mV_____+40mV
Comm Tones_____(✓)
dc offset -40mV_____+40mV
NAV-750B Marker Beacon Tones_____(✓)
dc offset -80mV_____+80mV

Manual Channeling

17. Perform Manual Frequency Advance (5.9)

_____(✓)

Automatic Channeling

18. Perform Automatic Frequency Channeling test (5.10).

25 kHz steps_____(✓)
50 kHz steps_____(✓)
100 kHz steps_____(✓)
200 kHz steps_____(✓)
End Channeling Indicator_____(✓)

NAV-750 Series Short Form
PERFORMANCE TEST DATA SHEET

1-34-0022

1. Initial Procedure, Meter Zero____(✓) Line Voltage _____Vac

2.

Tone	Deviation	Distortion	Frequency	
30 Hz	. . . . .	0.5% Max._____	29.994_____	30.006 Hz
90 Hz	. . . . .	0.4% Max._____	89.982_____	90.018 Hz
150 Hz	. . . . .	0.4% Max._____	149.97_____	150.03 Hz
9960 Hz	46.1 to 50.9µs	_____	9958.008_____	9961.992 Hz

3. LOC centering, Standard NAV-750 -1mV_____+1mV
NAV-750A and B -0.27mV_____+0.27mV

4. G/S centering, Standard NAV-750 -1mV_____+1mV
NAV-750A and B -0.27mV_____+0.27mV

5. 1020Hz tone, Distortion_____0.5% Max.
Freq. 1014.9Hz_____1025.5 Hz

6. RF frequency at 110 MHz, 109.9999 MHz_____110.0001 MHz

7. 8. 9.

Tone	Measured % Mod		Panel Mod. Meter (Measured % Mod.)
30 Hz	28.8 %_____	31.2 %	_____±1.2 % Mod.
9960 Hz	28.8 %_____	31.2 %	_____±1.2 % Mod.
90 Hz	19.2 %_____	20.8 %	_____±0.8 % Mod.
150 Hz	19.2 %_____	20.8 %	_____±0.8 % Mod.
90 Hz	38.4 %_____	41.6 %	_____±1.6 % Mod.
150 Hz	38.4 %_____	41.6 %	_____±1.6 % Mod.
1020 Hz	28.8 %_____	31.2 %	_____±1.2 % Mod.
400 Hz	92.15%_____	97.85%	_____±2.85% Mod.
1300 Hz	92.15%_____	97.85%	_____±2.85% Mod.
3000 Hz	92.15%_____	97.85%	_____±2.85% Mod.

10. Output power (Attenuator @ -30, ±1.5 dBm)

Freq.	Pwr	Freq.	Pwr	Freq.	Pwr	Freq	Pwr
108.0	_____	118.0	_____	128.0	_____	138.0	___
148.0	_____	158.0	_____	334.7	_____		

11. Meter RF Level Scale. . . . . _____(✓)

12. Bearing Accuracy (±0.05°) . 0° "TO" _____ 0° "FROM"_____
90° "TO" _____90° "FROM"_____

13. Internal Bearing Check (±0.05°) @ 90.00°. . -0.05° _____+0.05°
(±0.05°) @ 270.00° . -0.05° _____+0.05°

14. Full Scale Bearing Deviation Check:

@ 89.50°	-0.45°_____	-0.55°
@ 90.50°	+0.45°_____	+0.55°

15. Counter 0.01° Var_____(✓) 0.05° Var _____(✓)

16. Demod Tones and dc offset:

	Tones	dc Offset	
LOC	____(✓)	-40mV_____	+40mV
G/S	____(✓)	-40mV_____	+40mV
VOR	____(✓)	-40mV_____	+40mV
Comm	____(✓)	-40mV_____	+40mV
NAV-750B Mkr Bcn	____(✓)	-80mV_____	+80mV

17. Manual Channeling. . . . . _____(✓)

18. Automatic Channeling . . . . . _____(✓)

25 kHz	_____(✓)
50 kHz	_____(✓)
100 kHz	_____(✓)
200 kHz	_____(✓)
End Channel Ind.	_____(✓)

SECTION VI

CALIBRATION PROCEDURES

6.1 INTRODUCTION. This section contains procedures designed to return the NAV-750 series bench test sets to peak operating condition. To ensure validity of the calibration adjustments, the NAV-750 series test set must have a one-hour warm-up period and the line voltage must be: 117Vac nominal, ±11.7 Vac; or when the test set is so wired, 234 Vac nominal, ±16Vac.

6.2 SAFETY CONSIDERATIONS. This manual contains warnings, notes and procedures that must be followed to ensure safe operation. Any interruption of internal or external grounding may make the test set dangerous. Intentional interruption of protective grounding conductors is prohibited. Calibration of the NAV-750 test sets requires working with the set opened and power applied. Any calibration, maintenance and repair should be performed only by skilled personnel who are aware of the hazards involved.

6.3 EQUIPMENT CONSIDERATIONS. Power to the NAV-750 test sets must be removed during the replacement or removal of any component, not only to ensure personnel safety, but to protect equipment from arcing and subsequent damage. For example; when removing a PC board and replacing it with an extender board attached, remove power from the test set before removing the PC board. Then apply power to the test set after the PC board and extender have been installed.

6.4 ENVIRONMENTAL CONSIDERATIONS. For best results, the NAV-750 test set calibration environmental condidions should be identical to the environmental conditions at the normal operating location.

6.5 REQUIRED TEST EQUIPMENT. Test equipment required for the calibration procedure is listed in Table 6-1. Each calibration procedure specifies required test equipment.

6.6 CALIBRATION PROCEDURE APPLICABILITY. Unless otherwise specified, each procedure is applicable in whole, or in part as indicated, to all models of the NAV-750 bench test set. The calibration procedures are sequenced to follow a logical order of progression. However, individual procedures may be used to calibrate individual systems providing the required calibration or test of effecting circuitry has been accomplished or verified via the appropriate Performance Evaluation Procedures.

6.7 CORRECTIVE ACTION. Unless otherwise specified, verify the results of each procedure and take corrective action whenever a test or calibration requirement is not met. "Corrective Action" can mean either troubleshooting the unit under test to determine the component failure and replacing that component or making a mechanical or electrical repair to restore normal operation.

6.8 CALIBRATION RECORD. Results of the calibration procedures may be recorded in the Calibration Data Sheet at the end of the Calibration Procedures. The recorded results can be used for comparison in future calibrations, troubleshooting and for references after repair and inspection.

WARNING

Adjustments described in the calibration procedures are performed with power ON the unit under test with covers removed. Many points, if contacted, may result in personal injury.

TABLE 6-1

REQUIRED TEST EQUIPMENT FOR CALIBRATION PROCEDURES

NOTE

Minimum use specifications are the principal parameters for the performance of the Calibration Procedures and are included to assist in the selection of alternate test equipment. Satisfactory performance of alternate items should be verified prior to use. All applicable equipment must bear evidence of current calibration.

Item	Minimum Use Specification	Equipment
Digital Voltmeter	Minimum Resolution: 10μ Volts ac	Cimron DMM-52 or equivalent
Oscilloscope	Dual Trace with delayed sweep. Frequency Response: 40 MHz, minimum. Time Base Accuracy: ±3%.	Dumont 1052 or equivalent
Frequency Counter	Minimum Freq. Response: 120 MHz. Minimum Sensitivity: -10 dBm. Minimum Time Base Accuracy: 0.000005%	Fluke 1953A w/option 20, or equivalent.
Distortion Analyzer	Minimum Resolution: 0.01%	Sound Technology 1700B or equivalent.
RF Power Meter	Power Measurement Capability: -30 dBm Accuracy: ±0.2 dB	Boonton 42 dB or equivalent
True RMS Voltmeter	Minimum Resolution: 10μ Volts ac	Fluke Model 931B, Cimron DMM-52, or equivalent
Spectrum Analyzer	Freq. Range: 50 MHz to 1.2 GHz Minimum Dynamic Range: 85 dB Minimum Bandwidth: 1 kHz/Division Minimum Resolution: 300 Hz	Tektronix 7313/7L13

TABLE 6-1 (cont'd)

REQUIRED TEST EQUIPMENT FOR CALIBRATION PROCEDURES

Item	Minimum Use Specification	Equipment
Modulation Meter	Carrier Freq. Range: 10 MHz to 1.2 GHz Sensitivity: 10m Vrms from 10 MHz to 520 MHz. Input Impedance: 50 ohms, nominal Depth Accuracy: ±0.7% of reading at 20, 30, and 40% AM at tone frequency range from 30 Hz to 3 kHz. Detector Flatness: Indicated AM for constant % AM between 20 and 40% and frequency modulation of 90 and 150 Hz will be within ±0.4%.	Boonton Model 82 AD or equivalent
Bearing Check Device	Minimum Bearing Check Capability: 000°, 180°, 090°, & 270°. Accuracy: ±0.02° relative to IFR Bearing Standard. Should be capable of indicating error in ±0.01° increments.	IFR CS-360(D) or equivalent
Wave Analyzer	Freq. Range: 12 to 30 kHz Minimum Dynamic Range: 75 dB. Minimum Bandwidth: 100 Hz Minimum Resolution: -90 dBm	HP3590 with 3593 plug-in or equivalent
RF Sweep Generator	RF power output: -6 dBm Freq. Range: 70 to 340 MHz Flatness: ±0.2 dB	Tektronix TR502 or equivalent
Audio Oscillator	Freq. Range: 20 Hz to 5 kHz Distortion: < 0.5% Output: Variable from 0 to 9V p-p.	Wavetek 183 or equivalent

TABLE 6-2

SUPPORT EQUIPMENT AND ACCESSORIES

Item	Notes	Equipment
Circuit Board Extender Assy.	For PC-1 thru PC-5, and PC-7	IFR P/N 2-16-0211
Circuit Board Extender Assy.	For PC-6	IFR P/N 2-16-0212
Flexible Test Cable (5 required)		IFR P/N 1-16-0214
Coax. TEE Connector		Americon P/N 2091-0000
BNC Adapter		Americon P/N 2081-2321

6.9 METER MECHANICAL ZERO CHECK AND ADJUSTMENT

DESCRIPTION: This procedure should be performed only after the NAV-750 has been OFF for at least 30 minutes. Less off-time requires shorting meter terminals before check is made.

TEST EQUIPMENT: None

PROCEDURE:

1. Verify that front panel meter needle is at scale 0. _____(✓)

2. To adjust needle to scale 0, turn meter adjustment screw, located below center of meter, in either direction.

6.10 INITIAL PROCEDURE

DESCRIPTION: This procedure verifies the position of NAV-750 control positions and provides for power application.

TEST EQUIPMENT: Digital Voltmeter

1. Set NAV-750 control and switches to positions listed below:

TO-FROM bearing switch	FROM
METER FUNCTION switch	0-100 or OFF
MASTER MOD level control	.CAL
1020 Hz Ident. Tone Mod level control	.CAL
9960 Hz FM Tone Mod. level control	.CAL
30 Hz Tone Mod. level control	.CAL
.01-.05 Degree bearing select switch	..01
LOC DDM selector switch	0
LOC Variable DDM control	0
LOC G/S Frequency selector switch	.LOC
G/S DDM selector switch	0
G/S Variable DDM control	0
FREQUENCY selector switch	.108.100 MHz
Channeling frequency increment selector switch	25 kHz
AUTO-MANUAL frequency control switch	MANUAL

(cont'd next page)

6.10 INITIAL PROCEDURE (cont'd)

CHANNELING rate control. . . . . ccw
ΔF control (Variable RF control). . . . . ccw
BEARING-FREQ. display select switch . . . . . .FREQ
Attenuator control . . . . . -30 dBm

2. Remove NAV-750 top and two side covers.

3. Using digital voltmeter (DVM), verify that the 50 Hz to 400 Hz power source is 117 Vac ±11.7 Vac, (or 234 ±16 Vac when NAV-750 is so wired). Record measured value.

_____Vac

WARNING

SOME VOLTAGES IN THIS EQUIPMENT ARE LETHAL. USE CAUTION WHILE TAKING MEASUREMENTS, MAKING ADJUSTMENTS OR WORKING INSIDE THE TEST SET WHEN POWER CABLE IS SUPPLYING POWER TO SET.

4. Connect the NAV-750 to the power source and press LINE switch to turn set ON. Allow one hour warm-up time before proceeding with calibration procedures.

6.11 POWER SUPPLY VOLTAGE TEST

DESCRIPTION: The NAV-750 power supply is mounted on the rear panel and supplies power to all subassemblies. This procedure checks the output voltages of the power supply. Except for the ±11 Vdc supplies, there are no adjustments for these voltages. Power supply schematics and component designation drawings are in the Schematic Section.

SPECIFICATIONS: When power source is within tolerance, the power supply voltages should be as follows:

VOLTAGES	RIPPLE
-18 Vdc (-17 to -22 Vdc)	2V p-p Max
+24 Vdc (+22 to +25.2 Vdc)	20mV p-p Max.
+12 Vdc (+11.4 to +12.6 Vdc)	15mV p-p Max.
+ 5 Vdc (+ 4.7 to + 5.3 Vdc)	15mV p-p Max.
-12 Vdc (-11.4 to -12.6 Vdc)	15mV p-p Max.

(cont'd next page)

6.11 POWER SUPPLY VOLTAGE TEST (cont'd)

+170V dc (+155 to +180V dc)	N/A
+ 11V dc (+10.9 to +11.1V dc)	30mV p-p Max.
- 11V dc (-10.9 to -11.1V dc)	30mV p-p Max.

TEST EQUIPMENT: Digital Voltmeter (DVM)
Oscilloscope

PROCEDURE:

1. Using digital voltmeter and oscilloscope, measure and record voltages and ripple voltages at below listed Test Points. (Test points are designated on drawing 3-16-0238, Rear Panel Power Supply Voltage Test Points and Component Designation). Rear panel chassis is ground reference for voltages listed.

TEST POINT	VOLTAGE	RIPPLE VOLTAGE
Neg. (-) Lead on C1602 (unreg)	(-17 _____ -22V dc)	_____(2V p-p Max.)
Reg. X1601	(+22 _____ +25.2V dc)	_____(20mV p-p Max.)
Reg. X1602	(+11.4 _____ +12.6V dc)	_____(15mV p-p Max.)
Reg. X1603	(+ 4.7 _____ + 5.3V dc)	_____(15mV p-p Max.)
Reg. X1604	(-11.4 _____ -12.6V dc)	_____(15mV p-p Max.)
High Voltage test point	(+155 _____ +180V dc)	N/A
Collector of Q314	(+10.9 _____ +11.1V dc)	_____(30mV p-p Max.)
Collector of Q313	(-10.9 _____ -11.1V dc)	_____(30mV p-p Max.)

6.12 POSITIVE AND NEGATIVE 11V dc POWER SUPPLY TEST AND ADJUSTMENT (PC-3)

DESCRIPTION: The adjustment of positive and negative 11V dc power supplies located on PC-3 differ according to serial number and incorporation of the 11 Volt Tracking Regulator modification. In units prior to S/N 178 and without the Tracking Regulator modification, the +11 Volt supply is adjusted by R362 and the -11 Volt supply is adjusted by R355. On units S/N 178 and on, and those on which the Tracking Regulator modification was incorporated, R363 is the adjustment for both positive and negative supplies. In both cases, it is most important that the voltage values are balanced to within 0.150V dc for proper operation of the tone modulation system on PC-3 and sine synthesizers on

(cont'd next page)

6.12 POSITIVE AND NEGATIVE 11V dc POWER SUPPLY TEST AND ADJUSTMENT (PC-3) (cont'd)

PC-2 and PC-5. Any adjustment that changes the value or balance of the 11 Volt supplies requires checking Tone Distortion, % Modulation and Centering calibrations.

SPECIFICATIONS:

+11V dc (+10.9 to +11.1V dc) and ±0.150Vdc of -11V dc value.
-11V dc (+10.9 to -11.1V dc) and ±0.150Vdc of +11V dc value.

TEST EQUIPMENT: Digital Voltmeter (DVM)
Circuit board extender, IFR P/N 2-16-0211

PROCEDURE:

1. Remove power to NAV-750.

2. Remove PC-3, Tone Summation board, attach circuit board extender assembly and reinstall PC-3

3. Apply power to NAV-750.

NOTE

If requirements of step 4, 5 and 6 are not met, perform steps 7 through 11. Otherwise omit steps 7 through 11.

4. Connect DVM to +11V dc supply (across C304) on PC-3 and measure the voltage which should be +11 (±0.1) V dc.

+10.9V dc_____+11.1Vdc

5. Connect DVM to -11V dc supply (across C303) and measure the voltage which should be -11(±0.1)V dc.

-10.9V dc_____-11.1V dc

6. Verify that the balance of the +11 and -11V dc supplies is within 0.150V dc.

+ & - 11V dc Balance -0.150V dc_____+0.150V dc

7. Connect DVM to output of +11V dc supply (across C304) on PC-3.

(cont'd next page)

6.12 POSITIVE AND NEGATIVE 11V dc POWER SUPPLY TEST AND ADJUSTMENT (PC-3) (cont'd)

8. Adjust +11V ADJUST (R363) (or R362 on units prior to S/N 178) potentiometer on PC-3 to obtain +11(±0.1)V dc DVM indication.

+10.9V dc_____+11.1V dc

9. Connect DVM to output of -11V dc supply (across C303) on PC-3 and measure the voltage which should be -11(±0.1)V dc.

-10.9V dc_____-11V dc

10. Verify that the balance of the +11 and -11V dc supplies is within 0.150V dc.

+ & - 11V dc Balance -0.150V dc_____+0.150V dc

NOTE

Perform step 11 for units prior to S/N 178 without Tracking Regulator Modification.

11. Adjust -11V ADJUST (R355) potentiometer on PC-3 for DVM indication of -11(±0.1)V dc and within 0.150V dc of voltage value recorded in step 8.

-10.9V dc_____-11.1V dc

12. Remove power and replace PC-3 without extender board.

6.13 CLOCK OSCILLATOR (2.16MHz) CALIBRATION (PC-4)

DESCRIPTION: The clock oscillator, located on the Bearing Logic Board PC-4, is a crystal controlled oscillator designed to operate at 2.16 MHz. Capacitor C-401 sets this frequency precisely. The clock oscillator provides the reference signal to the VOR bearing counter system. Four tones are derived from frequencies obtained from the bearing counter system: the 30 Hz Ref. tone; the 30 Hz Var. tone; the 90 Hz tone; and the 150 Hz tone. Therefore, the clock oscillator frequency directly controls these four tone frequencies. This procedure sets the clock frequency to 2.16 MHz and also checks the digitally derived tones for symmetrical waveform and frequency. There are no other adjustments on PC-4. Performance Test reference, paragraph 5.13. A prerequsite to this procedure is paragraph 6-12, Positive and Negative 11V dc Power Supply Test and Adjustment.

(cont'd next page)

6.13 CLOCK OSCILLATOR (2.16 MHz) CALIBRATION (PC-4) (cont'd)

SPECIFICATIONS: Clock oscillator frequency 2.16MHz (±0.02%) and:

30 Hz Ref. tone	(±0.02%)
30 Hz Var. (FROM) tone	(±0.02%)
30 Hz Var. (TO) tone	(±0.02%)
90 Hz tone	(±0.02%)
150 Hz tone	(±0.02%)

TEST EQUIPMENT: Frequency Counter
Oscilloscope
Circuit Board Extender, IFR P/N 2-16-0211

PROCEDURE:

1. Remove power to NAV-750.

2. Remove Bearing Logic Board, PC-4, attach circuit board extender assembly, and reinstall PC-4.

3. Apply power to NAV-750.

4. Connect RF counter to pin 6 of X431 on PC-4. Counter should indicate 2.16MHz (±432 Hz).

5. Adjust trimmer capacitor C401 on PC-4 until RF counter indicates 2.16 MHz (±432 Hz).

2,159,568 Hz_____2,160,432 Hz

NOTE

The following steps are provided to check the digitally derived tone waveforms for symmetry and frequency. Refer to schematic diagram 4-16-0024-25 to verify PC-4 Bearing Logic Board pin connection numbers.

30Hz REF. TONE

6. Connect frequency counter to 30Hz Ref. tone output point (PC-4 connector pin X).

7. Counter should indicate 30 Hz (±0.006 Hz).

29.994 Hz_____30.006 Hz

8. Disconnect frequency counter and connect oscilloscope vertical input to 30 Hz Ref. tone output point (PC-4 connector pin X).

(cont'd next page)

6.13 CLOCK OSCILLATOR (2.16 MHz) CALIBRATION (PC-4) (cont'd)

9. Using the oscilloscope delayed sweep function, verify that the 30 Hz Ref tone waveform is symmetrical with a 50-50 duty cycle. The positive and negative time durations of the waveform should be equal (±1.0µs).

_____(✓)

30 Hz VAR. TONE (FROM)

10. Connect frequency counter to 30Hz VAR. tone output point (PC-4 connector pin 11).

11. Counter should indicate 30 Hz (±0.006 Hz).

29.994 Hz_____30.006 Hz

12. Disconnect frequency counter and connect oscilloscope vertical input to 30 Hz Var. tone output point (PC-4 connector pin 11).

13. Using the oscilloscope delayed sweep function, verify that the 30 Hz Var. tone waveform is symmetrical with a 50-50 duty cycle. The positive and negative time durations of the waveform should be equal (±1.0µs).

_____(✓)

30 Hz VAR. TONE (TO)

14. Connect frequency counter to 30 Hz Var. tone output point (PC-4 connector pin T).

15. Counter should indicate 30 Hz (±0.006 Hz).

29.994 Hz_____30.006 Hz

16. Disconnect frequency counter and connect oscilloscope vertical input to 30 Hz Var. tone output point (PC-4 connector pin T).

17. Using the oscilloscope delayed sweep function, verify that the 30 Hz Var. tone waveform is symmetrical with a 50-50 duty cycle. The positive and negative time durations of the waveform should be equal (±1.0µs).

_____(✓)

90 Hz TONE

18. Connect frequency counter to 90 Hz tone output point (PC-4 connector pin 10).

(cont'd next page)

6.13 CLOCK OSCILLATOR (2.16 MHz) CALIBRATION (PC-4) (cont'd)

19. Counter should indicate 90 Hz (±0.018 Hz).

89.982 Hz_____90.018 Hz

20. Disconnect frequency counter and connect oscilloscope vertical input to 90 Hz tone output point (PC-4 connector pin 10).

21. Using the oscilloscope delayed sweep function, verify that the 90 Hz tone waveform is symmetrical with a 50-50 duty cycle. The positive and negative time durations of the waveform should be equal (±1.0µs)

_____(✓)

150 Hz TONE

22. Connect frequency counter to 150 Hz output point (PC-4 connector pin W).

23. Counter should indicate 150 Hz (±0.03 Hz).

149.97Hz_____150.03Hz

24. Disconnect frequency counter and connect oscilloscope vertical input to 150 Hz tone output point (PC-4 connector pin W).

25. Using the oscilloscope delayed sweep function, verify that the 150 Hz tone waveform is symmetrical with a 50-50 duty cycle. The positive and negative time durations of the waveform should be equal (±1.0µs).

_____(✓)

26. Remove power to NAV-750.

27. Remove circuit board extender and replace PC-4.

6.14 VOR, 30 Hz REF. AND 30 Hz VAR. TONE DISTORTION ADJUSTMENT (PC-2)

DESCRIPTION: The 30 Hz Ref. and 30 Hz Var. tone sine synthesizers are located on the 30 Hz Sine Board, PC-2. This procedure provides for adjusting both 30 Hz tones for minimum distortion. Prerequisites for this procedure are paragraph 6-12, Positive and Negative 11V dc Power Supply Test and Adjustment and paragraph 6-13, Clock Oscillator (2.16 MHz) Calibration. Performance Test reference is paragraph 5.13.

(cont'd next page)

6.14 VOR, 30 Hz REF. AND 30 Hz VAR. TONE DISTORTION ADJUSTMENT (PC-2) (cont'd)

SPECIFICATIONS:

TONE	DISTORTION
30 Hz Ref.	0.5% Max.
30 Hz Var.	0.5% Max.

TEST EQUIPMENT: Distortion Analyzer
Circuit Board Extender, IFR P/N 2-16-0211

PROCEDURE:

1. With power removed from NAV-750, remove Bearing Logic Board PC-2, attach circuit board extender assembly, and reinstall PC-2.

2. Apply power to NAV-750.

30 Hz REF. TONE

3. Connect distortion analyzer to NAV-750 rear panel 30 Hz Ref. jack (J-22).

4. Adjust 30 Hz REF. AMPL (R2039) and 30 Hz REF. CENT. (R2043) potentiometers alternately for minimum (<0.5%) tone distortion.

5. Distortion analyzer should indicate not more than 0.5% total harmonic distortion for the 30 Hz REF. tone.

0%_____0.5%

30 Hz VAR. TONE

6. Disconnect distortion analyzer from J-22 and connect analyzer to rear panel 30 Hz VAR jack (J-24).

7. Adjust 30 Hz VAR. CENT. (R2005) and 30 Hz VAR. AMPL. (2001) potentiometers alternately for minimum (<0.5%) tone distortion.

8. Distortion analyzer should indicate not more than 0.5% total harmonic distortion for the 30 Hz VAR. tone.

0%_____0.5%

9. Disconnect distortion analyzer from J-24.

6.15 IDENT. (1020 Hz) AND MARKER BEACON TONE ADJUSTMENTS (PC-2)

DESCRIPTION: An independent tone generator, located on PC-2, supplies the 1020 Hz Ident. tone in all NAV-750 models. In the NAV-750B model, this tone generator also supplies Marker Beacon Tones according to the position of the Meter Function and Tone Selector Switch. Prerequisites for this procedure are: Paragraph 6-12, Positive and Negative Power supply test and adjustments; and paragraph 6-13, Clock Oscillator (2.16 MHz) Calibration. Performance Test reference, paragraph 5.13.

SPECIFICATIONS:

TONE	DISTORTION	FREQUENCY
1020 Hz	0.5% Max.	0.5%
400 Hz	0.7% Max.	0.7%
1300 Hz	0.7% Max.	0.7%
3000 Hz	0.7% Max.	0.7%

TEST EQUIPMENT: Frequency Counter
Distortion Analyzer
Circuit Board Extender, IFR P/N 2-16-0211

TEST SET CONDITION: Power on and PC-2 on extender board.

PROCEDURE:

NOTE

The FREQ and AMPL controls are interactive, and the adjustments must be made so that distortion is within specifications while the frequency remains 1020 Hz (±5.1 Hz).

1. Set controls as follows:

   Meter Function selector switch. . . . . .BRG

   on NAV-750B model;
   Meter Function and tone . . . . . .BRG
   selector switch

2. Connect frequency counter to rear panel 1020 Hz jack (J-16).

3. Frequency counter should indicate approximately 1020 Hz (within 10 Hz). If not, adjust 1020 Hz FREQ potentiometer to obtain approximately 1020 Hz (±10 Hz).

(cont'd next page)

6.15 IDENT. (1020 Hz) AND MARKER BEACON TONE ADJUSTMENTS (PC-2) (cont'd)

4. Disconnect frequency counter and connect distortion analyzer to 1020 Hz jack (J-16).

5. Adjust 1020 Hz CENT. (R2088) potentiometer for minimum indication on distortion analyzer.

6. Adjust 1020 Hz AMPL (R2074) potentiometer for minimum indication on distortion analyzer. (Varying the AMP (R2074) pot will change the frequency of the generator).

7. Disconnect distortion analyzer and connect frequency counter to 1020 Hz jack (J-16).

8. Adjust 1020 Hz FREQ (R2085) potentiometer for 1020 Hz (±5.1 Hz) indication on frequency counter.

1014.9 Hz_____1025.1 Hz

9. Disconnect frequency counter and connect distortion analyzer to 1020 Hz jack (J-16).

10. Distortion analyzer should indicate not more than 0.5% total harmonic distortion at 1020 Hz. If necessary, adjust 1020 Hz CENT. (R2087) potentiometer to obtain minimum distortion indication.

0%_____0.5%

NOTE

Perform the following steps for the NAV-750B model only.

11. Disconnect distortion analyzer and connect frequency counter to 1020 Hz jack (J-16).

12. Set meter function and tone selector switch to 400 Hz.

13. Adjust 400 Hz FREQ (R2809) potentiometer until frequency counter indicates 400 Hz (±2.8 Hz).

497.2 Hz_____402.8 Hz

14. Set meter function and tone selector switch to 1300 Hz.

15. Adjust 1300 Hz FREQ. (R2094) potentiometer until frequency counter indicates 1300 Hz (±9.1 Hz).

1290.9 Hz_____1309.1 Hz

(cont'd next page)

6.15 IDENT. (1020 Hz) AND MARKER BEACON TONE ADJUSTMENTS (PC-2) (cont'd)

16. Set meter function and tone selector switch to 3000 Hz.

17. Adjust 3000 Hz FREQ. (R2092) potentiometer until frequency counter indicates 3000 Hz (±21 Hz).

2779.0Hz_____3021.0Hz

18. Disconnect frequency counter and connect distortion analyzer to 1020 Hz jack (J-16).

NOTE

Any marker beacon tone distortion adjustments made with AMPL (R2074) or CENT (R2087) potentiometers requires repeating 1020 Hz tone frequency and distortion adjustments (steps 4 thru 8).

19. Distortion analyzer should indicate not more than 0.7% total harmonic distortion at 3000 Hz. If necessary, adjust R2074 and/or R2087.

0%_____0.7%

20. Set meter function and tone selector switch to 1300 Hz.

21. Distortion analyzer should indicate not more than 0.7% total harmonic distortion at 1300 Hz. If necessary, adjust R2074 and/or R2087.

0%_____0.7%

22. Set meter function and tone selector switch to 400 Hz.

23. Distortion analyzer should indicate not more than 0.7% total harmonic distortion at 400 Hz. If necessary, adjust R2074 and/or R2087.

0%_____0.7%

24. Disconnect distortion analyzer from J-16.

6.16 VOR, 9960 Hz DISTORTION AND PHASE-LOCK LOOP ADJUSTMENT (PC-2)

DESCRIPTION: A tone generator designed to operate at 9960 Hz is part of a phase-locked loop referenced to the 30 Hz REF. tone. Beacuse the 30 Hz REF. tone is derived from the 2.16 MHz clock oscillator, the 9960 Hz generator frequency reflects the accuracy of the clock oscillator which is ±0.02%. This procedure sets the 9960 Hz PLL and tone distortion. Prerequisites for this procedure are: Paragraph 6.12, Positive and Negative 11V dc Power Supply Test and Adjustment;

(cont'd next page)

6.16 VOR, 9960 Hz DISTORTION AND PHASE-LOCK LOOP ADJUSTMENT (PC-2) (cont'd)

Paragraph 6.13, Clock Oscillator (2.16 MHz) Calibration; and Paragraph 6.14, VOR 30 Hz REF and 30 Hz VAR Tone Distortion Adjustments. Performance Test reference is paragraph 5.21. Refer to schematic diagram 3-16-0015 or 4-16-0290 for test point locations.

SPECIFICATIONS:

TONE	DISTORTION	FREQUENCY
9960 Hz	1.3% Max.	±0.02%

TEST EQUIPMENT: Frequency Counter
Distortion Analyzer
Oscilloscope
Circuit Board Extender, IFR P/N 2-16-0211

TEST SET CONDITION: Power on and PC-2 on extender board.

PROCEDURE:

1. Connect frequency counter to rear panel 9960 Hz jack (J-20).

2. Adjust 9960 Hz DEV. (R2049) potentiometer fully counter-clockwise to remove 30 Hz FM from 9960 Hz tone.

3. Refer to schematic diagram 3-16-0015 or, for the NAV-750B 4-16-0290 and locate test point labeled △3 (junction of R2407 and Q2002). Connect oscilloscope vertical input to test point △3 and select scope input to dc.

4. Adjust 9960 Hz FREQ (R2051) potentiometer fully counter-clockwise and notice the oscilloscope display shows a "swinging" dc level. (This "swinging" dc level is the tune line of the 9960 Hz phase-lock system). Position this display with oscilloscope controls to be vertically centered.

5. Adjust 9960 Hz FREQ (R2051) potentiometer to bring the "swinging" dc level scope display to a halt in a vertically centered position, indicating a phase-locked condition.

6. Verify that frequency counter indicates 9960 Hz (±1.992 Hz).

9958.008 Hz_____9961.992 Hz

7. Disconnect frequency counter and connect distortion analyzer to 9960 Hz jack (J-20).

(cont'd next page)

6.16 VOR, 9960 Hz DISTORTION AND PHASE-LOCK LOOP ADJUSTMENT (PC-2) (cont'd)

8. Adjust 9960 Hz CENT. (R2058) for minimum distortion indication on distortion analyzer of the phase-locked 9960 Hz tone.

9. Adjust 9960 Hz AMPL (R2068) potentiometer while monitoring the tune line (test point 3) on the oscilloscope for a very slight movement of the dc level, up or down. Adjust the 9960 Hz FREQ (R2501) potentiometer to center the dc level on the oscilloscope. Continue this process using the FREQ and AMPL controls to adjust for minimum distortion while maintaining a centered oscilloscope display of the tune line.

10. Repeat step 8.

11. Distortion analyzer should indicate not more than 1.3% total harmonic distortion of phase-locked 9960 Hz tone.

0%_____1.3%

12. Disconnect distortion analyzer from J-20.

6.17 VOR, 9960 Hz TONE FM DEVIATION ADJUSTMENT (PC-2).

DESCRIPTION: The 30 Hz REF tone frequency modulates the 9960 Hz tone on PC-2. This procedure sets the level of this modulation. Prerequisites for this procedure are: Paragraph 6.12, Positive and Negative 11V dc Power Supply Test and Adjustment; Paragraph 6.13, Clock Oscillator (2.16 MHz) Calibration; Paragraph 6.14, VOR 30 Hz REF and 30 Hz VAR Tone Distortion Adjustments; and Paragraph 6.16, VOR, 9960 Hz Distortion and Phase-Locked Loop Adjustment. Performance Test reference is paragraph 5.13 and 5.21. PC-2 schematic is 3-16-0015 or 4-16-0290 (for NAV-750B model).

SPECIFICATIONS: 9960 Hz tone 30 Hz deviation at the completed 5th cycle should be 48.5µs (±2.4µs).

TEST EQUIPMENT: Oscilloscope
Circuit Board Extender, IFR P/N 2-16-0211

TEST SET CONDITION: Power on and PC-2 on extender board.

(cont'd next page)

FM Deviation; ±480(±24)Hz

SCOPE SETTINGS

Vertical:
200mV/Div-Uncal

Horizontal:
Main Time Base
100µs/Div

Trigger:
Positive Slope

NOTE

Accuracy of calibration depends on oscilloscope sweep timing accuracy.

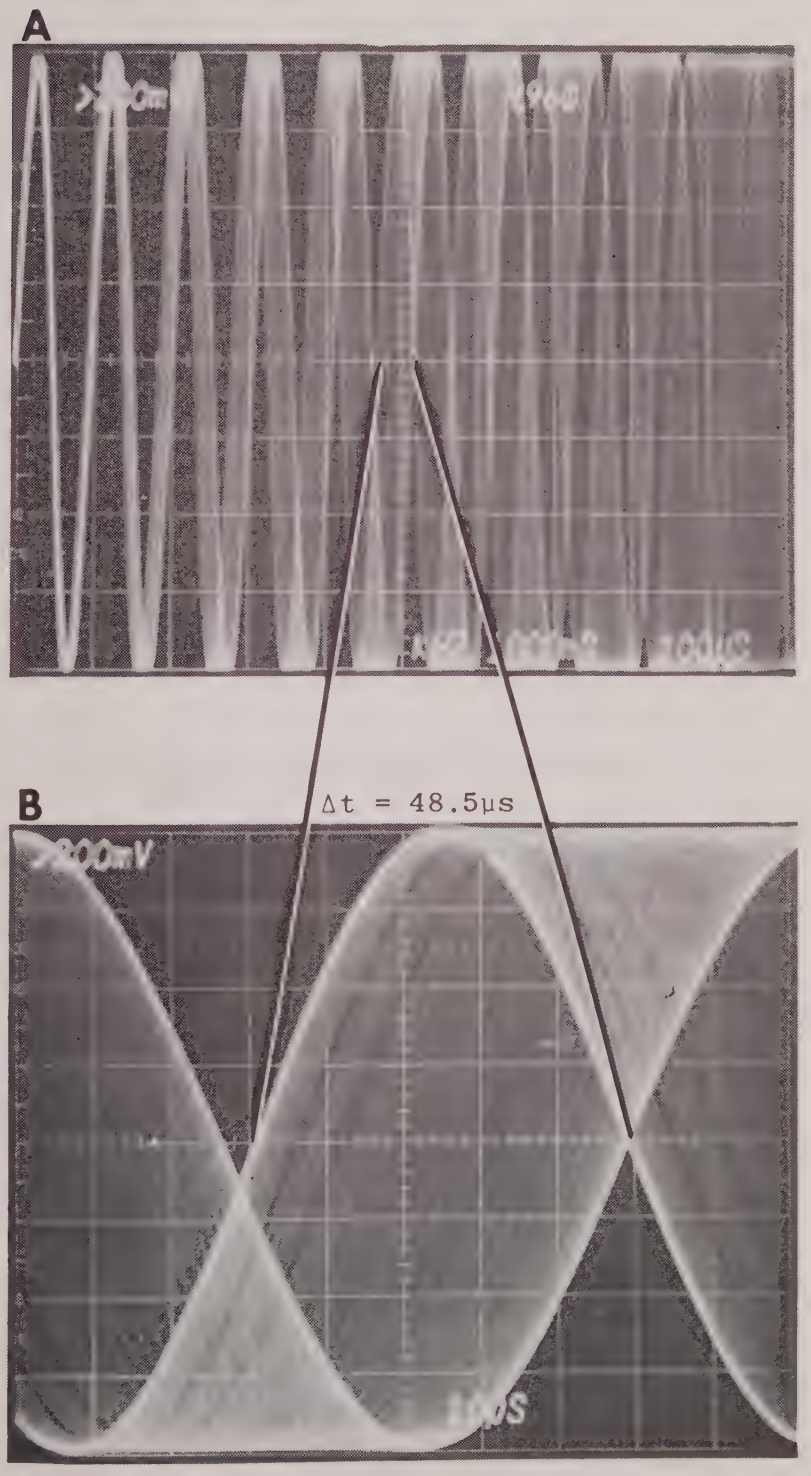

SCOPE SETTINGS

Vertical:
200mV/Div-Uncal

Horizontal:
Delay Time Base
10µs/Div

Trigger:
Positive Slope

Figure 6-1. 9960 Hz Deviation Adjustment

6.17 VOR, 9960 Hz TONE FM DEVIATION ADJUSTMENT (PC-2) (cont'd)

PROCEDURE:

1. Connect vertical input of oscilloscope to rear panel 9960 Hz jack (J-20).
2. Adjust 30 Hz DEV (R2049) potentiometer approximately one quarter turn clockwise.
3. Adjust oscilloscope trigger and position controls to vertically center the 9960 Hz display and position the sweep trigger point at the left edge of the horizontal center line as shown in figure 6-1(A).
4. Set oscilloscope controls as specified in Figure 6-1(B) for expanded display of completed portion of 5th cycle.
5. Adjust 9960 Hz DEV. (R2049) for Δt of 48.5µs (±2.4µs at the end of the 5th cycle measured at vertical zero on the oscilloscope display).

   46.1µs_____50.9µs
6. Disconnect oscilloscope from J-20.
7. Remove power to NAV-750.
8. Remove circuit board extender and replace PC-2.

6.18 ILS, 90 Hz AND 150 Hz TONE DISTORTION ADJUSTMENT (PC-5)

DESCRIPTION: The 90 Hz and 150 Hz tone sine synthesizers are located on PC-5. This procedure provides for distortion adjustments for both tones. Prerequisite for this procedure are: Paragraph 6.12, Positive and Negative 11V dc Power Supply Test and Adjustment; Paragraph 6.13, Clock Oscillator (2.16 MHz) Calibration. Performance Test reference is Paragraph 5.13. Schematic Diagram reference is 4-16-0024-25.

SPECIFICATIONS:

TONE	DISTORTION
90 Hz	0.4%
150 Hz	0.4%

(cont'd next page)

6.18 ILS, 90 Hz dnd 150 Hz TONE DISTORTION ADJUSTMENT (PC-5) (cont'd)

TEST EQUIPMENT: Distortion Analyzer
Circuit Board Extender, IFR P/N 2-16-0211

TEST SET CONDITION: Power Off

PROCEDURE:

1. Remove PC-5, Localizer Bearing Control Board, attach circuit board extender assembly, and reinstall PC-5.

2. Apply power to NAV-750.

3. Connect distortion analyzer to rear panel 90 Hz jack (J-17).

4. Adjust 90 Hz AMP (R5049) and 90 Hz CENT (R5085) alternately for minimum distortion.

5. Distortion analyzer should indicate not more than 0.4% distortion at 90 Hz.

   0%_____0.4%

6. Disconnect distortion analyzer from J-17 and connect analyzer to rear panel 150 Hz jack (J-19).

7. Adjust 150 Hz AMP (R5078) and 150 Hz CENT (R5082) for minimum distortion.

8. Distortion analyzer should indicate not more than 0.4% distortion at 150 Hz.

   0%_____0.4%

9. Disconnect distortion analyzer from J-19.

6.19 VOR, VARIABLE BEARING CONTROL ADJUSTMENT (PC-5).

DESCRIPTION: The variable bearing control changes the up-down counter in either direction in .01 or .05 degree steps with each 1/40 revolution. The control consists of a 40-tooth gear that breaks the light path of two transducers. As the light path is broken, the transducer output goes high. One transducer is used as a clock source, and the other as a direction of control rotation sensor. Performance Test reference is paragraph 5.16. Schematic diagram reference is 4-16-0024-25.

SPECIFICATIONS: Clockwise rotation of variable bearing control results in bearing increase and counter-clockwise rotation results in bearing decrease.

TEST EQUIPMENT: Oscilloscope
Circuit Board Extender, IFR P/N 2-16-0211

TEST SET CONDITION: Power on with PC-5 on extender board.

PROCEDURE:

1. Set controls as follows:

   BEARING-FREQ. . . . . .BEARING

   FREQUENCY . . . . . .108.000 MHz

   .01° - .05° bearing select switch . . . . . .01°

2. Verify that VOR mode indicator is ON.

3. Connect both vertical channel oscilloscope inputs to the outputs of the two photo-interrupter transducers. (The scope must be triggered by one of the two input signals).

4. Rotate the variable BEARING control and verify that the signal level shift to be above +10.5V at the high level and below +2.5V at the low level.

   Waveform high level > + 10.5V_____(✓)
   Waveform low level < + 2.5V_____(✓)

NOTE

The waveforms should be approximate square waves with frequency a function of BEARING control rotational speed.

(cont'd next page)

6.19 VOR, VARIABLE CONTROL ADJUSTMENT (PC-5) (cont'd)

PROCEDURE:

5. Connect both vertical channel oscilloscope inputs to test points (1) and (2) of X5013 and X5014 (ref. 4-16-0024-25).

6. Rotate BEARING control while monitoring oscilloscope for an approximate 90° phase difference between the two signals. If necessary, loosen the two screws holding one of the transducer brackets and position the bracket to obtain an approximate 90° phase difference.

7. Rotate BEARING control clockwise. Bearing display should increase.

_____(✓)

8. Rotate BEARING control clockwise. Bearing display should decrease.

_____(✓)

9. If results of steps 7 and 8 are opposite of those desired, repeat step 6 with either or both transducer brackets to obtain a 90° phase difference in the opposite direction. (Displayed 180° from the original setting).

10. Repeat steps 7 and 8.

6.20 VOR, .05° BEARING SELECT ADJUSTMENT (PC-5)

DESCRIPTION: A front panel switch, .01°-.05° select switch, determines bearing change increments when the BEARING control is rotated. In the .01° position, X5019 selects clock pulses before O/S X5012A. In the .05° position, X5019 selects clock pulses from a UJT oscillator. O/S 5012A enables the UJT oscillator to operate in pulse groups of five as set by potentiometer R5091. This procedure sets R5091 for a five pulse group. Performance Test reference is 5.16. Schematic diagram reference is 4-16-0024-25.

SPECIFICATION: Bearing display should change in .01° or .05° increments (per selector switch position) when BEARING control is rotated.

TEST EQUIPMENT: Oscilloscope
Circuit Board Extender, IFR P/N 2-16-0211

TEST SET CONDITION: Power on with PC-5 on extender board.

(cont'd next page)

6.20 VOR, .05° BEARING SELECT ADJUSTMENT (cont'd)

PROCEDURE:

1. Set controls as follows:

   BEARING FREQ. . . . . .BEARING

   FREQUENCY . . . . . .108.000 MHz

   .01°- .05° bearing select switch. . . . . .01°

2. Verify that VOR mode indicator is ON.

3. Connect oscilloscope vertical input to pin 2 of X5010 on PC-5.

4. Rapidly rotate the BEARING control while monitoring oscilloscope display and adjust .05° ADJUST (R5091) potentiometer for a pulse train of exactly six pulses. Note the position of the 5th and 6th pulses. Now, adjust R5091 until the 5th pulse is centered between the former position of the 5th and 6th pulse and the 6th pulse is entirely gone.

5. Rotate the BEARING control clockwise and counterclockwise to verify that bearing display changes in .05° increments with select switch positioned to .05°.

   _____(✓)

6. Remove power to NAV-750.

7. Remove circuit board extender

6.21 DC OFFSET MEASUREMENT AND ADJUSTMENT (PC-3)

DESCRIPTION: This procedure measures the dc offset at the DEMOD jack (J-23). The dc offset is set with NULL (R325) potentiometer on PC-3. Prerequisites for this procedure are: Paragraph 6.12, Positive and Negative 11V dc Power Supply Test and Adjustment; Paragraph 6.13, Clock Oscillator (2.16 MHz) Calibration; and Paragraphs 6.14 through 6.18, Tone Distortion Adjustments. Schematic reference is 3-16-0020 or 4-16-0298.

SPECIFICATION: DEMOD V dc (at J-23) with PC-3 installed should be within 2.0mV dc of DEMOD V dc with PC-3 removed.

(cont'd next page)

6.21 DC OFFSET MEASUREMENT AND ADJUSTMENT (PC-3)

TEST EQUIPMENT: Digital Voltmeter
Circuit Board Extender, IFR P/N 2-16-0211

TEST SET CONDITION: Power removed.

PROCEDURE:

1. Remove PC-3, Tone Summation Board, install circuit board extender assembly but do not install PC-3.
2. Apply power to NAV-750.
3. Set controls as follows:

   FREQUENCY. . . . . 108.000 MHz

   30 Hz. . . . . .UNCAL Max. ccw (0)

   MASTER MOD . . . . . CAL

   9960 Hz. . . . . .UNCAL Max. ccw (0)

4. Connect DVM to rear panel DEMOD jack (J-23).
5. Verify that VOR mode indicator is ON.
6. Measure and record DEMOD dc voltage value at J-23.
   _____V dc
7. Remove power from NAV-750.
8. Install PC-3 on extender board assembly and apply power to NAV-750.
9. Adjust Null (R325) potentiometer to obtain a voltage value equal to that recorded in step 6 (±2.0mV dc).

   Step 6 value_____(±2mV dc)

6.22 RF OUTPUT LEVEL (ATTENUATOR) ADJUSTMENT

DESCRIPTION: This procedure calibrates the RF output attenuator. Generally, this procedure is necessary only after attenuator replacement. Performance Test Reference is Paragraph 5.12.

SPECIFICATIONS: ±1.5 dBm at -30 dBm

(cont'd next page)

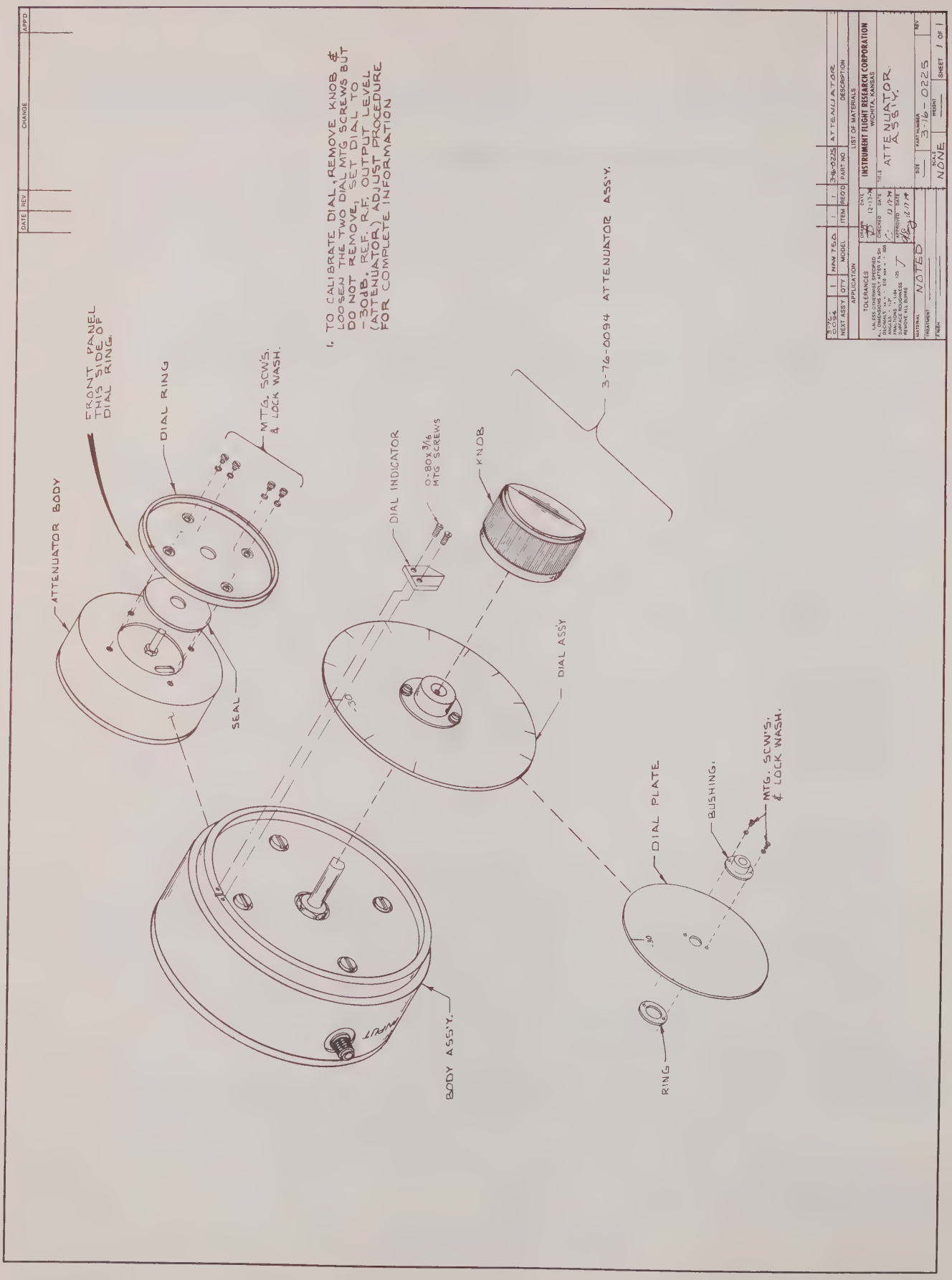

1. TO CALIBRATE DIAL, REMOVE KNOB & LOOSEN THE TWO DIAL MTG SCREWS BUT DO NOT REMOVE, SET DIAL TO -30dB. REF. R.F. OUTPUT LEVEL (ATTENUATOR) ADJUST PROCEDURE FOR COMPLETE INFORMATION
FRONT PANEL THIS SIDE OF DIAL RING.
DIAL RING
MTG. SCW'S. & LOCK WASH.
ATTENUATOR BODY
SEAL
DIAL INDICATOR
0-80x3/16 MTG SCREWS
KNOB
3-76-0094 ATTENUATOR ASS'Y.
DIAL ASS'Y
DIAL PLATE
BUSHING.
MTG. SCW'S. & LOCK WASH.
RING
BODY ASS'Y.
INPUT
3-76-0094
NEXT ASS'Y
1
NAV 750
ATTENUATOR
3-76-0225
APPLICATION
LIST OF MATERIALS
INSTRUMENT FLIGHT RESEARCH CORPORATION
WICHITA, KANSAS
ATTENUATOR ASS'Y.
3-76-0225
NONE
SHEET 1 OF 1

Figure 6-2

6.22 RF OUTPUT LEVEL (ATTENUATOR) ADJUSTMENT (cont'd)

TEST EQUIPMENT: RF Power Meter

TEST SET CONDITION: Power on with PC-3 on extender board.

PROCEDURE:

1. Set controls as follows:

   FREQUENCY. . . . . 138.000 MHz

   MASTER MOD . . . . . .UNCAL Max. ccw (0)

   Output Attenuator. . . . . -40 dBm

2. Remove Attenuator control knob.

3. Loosen but DO NOT REMOVE the two dial mounting screws on dial plate bushing. (Refer to Figure 6-2.)

4. Connect RF power meter to RF output connector (J3).

5. Rotate attenuator control shaft clockwise until RF power meter indicates exactly -30 dBm.

6. Position attenuator dial for agreement with power meter at -30 dBm and carefully tighten the two dial mounting screws.

7. Set FREQUENCY selector switches to 108.000 MHz and then verify that power meter indicates -30 dBm (±1.5 dBm) while the frequency is advanced to 157.000 MHz using manual or automatic channeling mode.

   -31.5 dBm_____-28.5 dBm

8. Set FREQUENCY selector switches to 329.000 MHz and then verify that power meter indicates -30 dBm (±1.5 dBm) while the frequency is advanced to 335.000 MHz using manual or automatic channeling mode.

   -31.5 dBm_____-28.5 dBm

Perform the following steps
for the NAV-750 B only.

9. Set FREQUENCY selector switches to 70.000 MHz.

10. Advance FREQUENCY selector switches to 79.000 MHz in 1 MHz steps and verify that power meter indicates -30 dBm (±1.5dBm) (±1.5 dBm).

    -31.5 dBm_____-28.5 dBm

6.23 METER RF LEVEL SCALE ADJUSTMENT (PC-3)

DESCRIPTION: This procedure calibrates the RF meter scale. Ensure that Paragraph 6.22, RF Output Level (Attenuator) Adjustment, has verified the RF output level. Schematic reference is 3-16-0020 or 4-16-0298.

SPECIFICATION: Meter needle should be aligned over RF LEVEL vertical mark, ±1½ needle widths, at all RF frequencies.

NOTE

After allowing for parallex, 1½ needle widths is when the meter needle is off-center just enough to expose the entire length of the RF LEVEL vertical mark.

TEST EQUIPMENT: None

TEST SET CONDITION: Power on with PC-3 on extender board.

PROCEDURE:

1. Set controls as follows:

   FREQUENCY. . . . . 108.000 MHz

   Meter Function Switch. . . . . .RF

2. Adjust RF LEVEL (R343) potentiometer on PC-3 to position meter needle over RF LEVEL mark.

3. While advancing the FREQUENCY selector switches in 10 MHz steps to 335 MHz, verify that meter needle remains aligned over RF LEVEL vertical mark, ±1½ needle widths.

   _____(✓)

NOTE

Perform the following steps for the NAV-750 B only.

4. Set FREQUENCY selector switches to 72.000 MHz.

5. While advancing the FREQUENCY selector switches in 1 MHz steps to 78.000 MHz verify that meter needle remains aligned over RF LEVEL vertical mark, ±1½ needle widths.

   _____(✓)

6.24 TONE AMPLITUDE MODULATION DEPTH AND CENTERING ADJUSTMENTS (PC-3)

DESCRIPTION: This procedure sets the amplitude modulation depth of each tone frequency generated by the NAV-750/A including the marker beacon tone frequencies generated in the NAV-750B. Prerequisites for this procedure are: Paragraph 6.12, Positive and Negative 11V dc Power Supply Test and Adjustment; Paragraph 6.13, Clock Oscillator (2.16 MHz) Calibration; Paragraph 6.14 through 6.18, Tone Distortion Adjustments; and Paragraph 6.21, DC Offset Measurement and Adjustment. Performance Test Reference is Paragraph 5.18 or 5.18A, 5.19, and 5.22 through 5.28. Schematic reference is 3-16-0020 or 4-16-0298 (NAV-750B) and 4-16-0141 or 4-16-0327 (NAV-750B).

SPECIFICATIONS:

TONE	% MODULATION
VOR 30 Hz	30(±1.2)%
VOR 9960 Hz	30(±1.2)%
LOC 150 Hz	20(±0.8)%
LOC 90 Hz	20(±0.8)%
G/S 150 Hz	40(±1.6)%
G/S 90 Hz	40(±1.6)%
Comm 1020 Hz	30(±1.2)%
Mkr Bcn Tones, 400, 1300 & 3000 Hz	95(±2.85)%

TEST EQUIPMENT: TRUE RMS VOLTMETER
Modulation Meter

Circuit Board Extender, IFR P/N 2-16-0211

TEST SET CONDITION: Power on with PC-3 on extender board.

PROCEDURE:

1. Set controls as follows

FREQUENCY . . . . . 108.000 MHz

METER FUNCTION Switch 0-100

9960 Hz . . . . . .UNCAL Max. ccw (0)

30 Hz . . . . . CAL

1020 Hz . . . . . CAL

(cont'd next page)

6.24 TONE AMPLITUDE MODULATION DEPTH AND CENTERING ADJUSTMENTS (PC-3) (cont'd)

MASTER MOD. . . . . .CAL

Output Attenuator . . . . . -7 dBm

VOR (30 Hz TONE)

2. Connect modulation meter to NAV-750 RF output connector (J3) and set modulation meter to indicate modulation percentage.

3. Adjust 30 Hz VAR MOD (R364) potentiometer to obtain 30(±1.2)% modulation meter indication.

28.8%_____31.2%

4. Adjust 9960 Hz tone modulation level control to CAL and verify that 9960 UNCAL indicator is OFF.

VOR (9960 Hz TONE)

5. Adjust 30 Hz tone modulation level control to UNCAL full ccw (0) and verify that 30 Hz tone UNCAL indicator is ON.

6. Adjust 9960 Hz MOD (R312) potentiometer to obtain 30(±1.2)% modulation meter indication.

28.8%_____31.2%

7. Adjust 30 Hz tone modulation level control to CAL and verify that 30 Hz tone UNCAL indicator is OFF.

LOC (150 Hz TONE)

8. Set FREQUENCY selector switches to 108.100 MHz and verify that LOC mode indicator is ON.

9. Set G/S DDM selector switch to 150 Hz and verify that 90 Hz tone off indicator is ON.

10. Adjust LOC MOD (R326) potentiometer to obtain 20(±0.8)% modulation meter indication.

19.2%_____20.8%

11. Connect true RMS voltmeter to rear panel DEMOD jack (J23).

12. Measure and record 150 Hz DEMOD ac voltage.

150 Hz DEMOD_____Vrms

LOC (90 Hz TONE)

13. Set G/S DDM selector switch to 90 Hz and verify that 90 Hz tone off indicator is OFF and 150 Hz tone off indicator is ON.

(cont'd next page)

6.24 TONE AMPLITUDE MODULATION DEPTH AND CENTERING ADJUSTMENTS (PC-3) (cont'd)

14. Adjust front panel CAL LOC (R7) potentiometer to obtain 20(±0.8)% modulation meter indication. (On NAV-750B, R7 is located behind lower left side of front panel).

19.2%_____20.8%

LOC CENTERING ADJUST

15. Measure and record 90 Hz DEMOD ac voltage at J23.

90 Hz DEMOD_____Vrms

16. Compare 90 Hz DEMOD Vrms (step 15) to 150 Hz DEMOD Vrms (step 12). Voltage should be identical within below listed tolerances:

MODEL	90 Hz DEMOD Vrms should be within:
NAV-750	±1.00mV of 150 Hz DEMOD Vrms
NAV-750A	±0.27mV of 150 Hz DEMOD Vrms
NAV-750B	±0.27mV of 150 Hz DEMOD Vrms

If necessary, readjust LOC 90 Hz calibration (R7) potentiometer to obtain the above requirements.

17. Set G/S DDM selector switch to 0 and verify that 90 and 150 Hz tone off indicators are OFF.

G/S (150 Hz TONE)

18. Set FREQUENCY selector switches to 334.7 MHz and verify that G/S mode indicator is ON.

19. Set LOC DDM selector switch to 150 Hz and verify that 90 Hz tone off indicator is ON.

20. Adjust G/S MOD (R332) potentiometer to obtain 40(±1.6)% modulation meter indication.

38.4%_____41.6%

21. Measure and record 150 Hz DEMOD ac voltage at J-23.

150 Hz DEMOD_____Vrms

G/S (90 Hz TONE)

22. Set LOC DDM selector switch to 90 Hz and verify that 90 Hz tone off indicator is OFF and 150 Hz tone off indicator is ON.

(cont'd next page)

6.24 TONE AMPLITUDE MODULATION DEPTH AND CENTERING ADJUSTMENTS (PC-3) (cont'd)

23. Adjust front panel CAL G/S (R8) potentiometer to obtain 40(±1.6)% modulation meter indication. (On NAV-750B R8 is located behind lower left side of front panel).

38.4%_____41.6%

G/S CENTERING ADJUST

24. Measure and record 90 Hz DEMOD ac voltage at J23.

90 Hz DEMOD_____Vrms

25. Compare 90 Hz DEMOD Vrms (step 24) to 150 Hz DEMOD Vrms (step 21). Voltage should be identical within below listed tolerances:

MODEL	90 Hz DEMOD Vrms should be within:
NAV-750	±1.00mV of 150 Hz DEMOD Vrms
NAV-750A	±0.27mV of 150 Hz DEMOD Vrms
NAV-750B	±0.27mV of 150 Hz DEMOD Vrms

If necessary, readjust G/S 90 Hz calibration (R8) potentiometer to obtain requirements.

26. Set LOC DDM selector switch to 0 and verify that both 90 and 150 Hz tone off indicators are OFF.

27. Disconnect true RMS voltmeter from J23.

COMM (1020 Hz TONE)

28. Set FREQUENCY selector switches to 118.000 MHz.

29. Verify that all tone level controls are in CAL positions.

30. Adjust 1020 Hz MOD (R365) potentiometer to obtain 30(±1.2)% modulation meter indication.

28.8%_____31.2%

NOTE

Perform the following steps for the NAV-750B only.

MARKER BEACON TONES

(cont'd next page)

6.24 TONE AMPLITUDE MODULATION DEPTH AND CENTERING ADJUSTMENTS (PC-3) (cont'd)

31. Set controls as follows:

FREQUENCY. . . . . .75.000 MHz

Output Attenuator. . . . . -13 dBm

Meter Function and tone selector switch. . . . . 1300 Hz

32. Connect modulation meter to the NAV-750B RF output connector (J-3).

33. Adjust MKR MOD (R374) potentiometer to obtain 95(±2.85)% modulation meter indication.

92.15%_____97.85%

34. Set meter function and tone selector switch to 400 Hz. Modulation meter should indicate 95(±2.85)%.

92.15%_____97.85%

35. Set meter function and tone selector switch to 3000 Hz. Modulation meter should indicate 95(±2.85)%.

92.15%_____97.85%

36. Disconnect modulation meter.

6.25 METER MODULATION SCALE CALIBRATIONS (PC-3)

DESCRIPTION: This procedure calibrates the modulation scales against measured tone modulation levels. Prerequisite to this procedure is Paragraph 6.24 Tone Amplitude Modulation Depth Adjustments and Paragraph 5.7, Meter Mechanical Zero Check and adjustment. Performance Test reference is Paragraph 5.19. Schematic reference is 3-16-0020 or 4-16-0298.

ADDITIONAL DATA REQUIRED:

Recorded results of Paragraph 6.24, Tone Amplitude Modulation Depth Adjustments.

SPECIFICATIONS:

MODULATION	METER TOLERANCE
30%	±1.2% Mod. from measured value
20%	±0.8% Mod. from measured value
40%	±1.6% Mod. from measured value
95%*	±3.0% Mod. from measured value

*NAV-750B only

TEST EQUIPMENT: None

TEST SET CONDITION: Power on with PC-3 on extender board.

PROCEDURE:

1. Set controls as follows:

FREQUENCY. . . . . 108.100 MHz

Meter Function Switch. 0-30

9960 Hz. . . . . CAL

30 Hz. . . . . CAL

1020 Hz. . . . . CAL

MASTER MOD . . . . . CAL

LOC DDM Selector Switch. 0

G/S DDM Selector Switch. . . . . 150 Hz

(cont'd next page)

6.25 METER MODULATION SCALE CALIBRATIONS (cont'd)

0-30 METER SCALE ADJUSTMENT

2. Record 20% Mod. measured value from paragraph 6.24 step 10.

Measured Value_____

3. Adjust 30% (R348) potentiometer until meter indication matches step 2 measured value.

Measured Value (±0.8% Mod.)_____

0-100 METER SCALE ADJUSTMENT

4. Set meter function switch to 0-100.

5. Set LOC G/S frequency select switch to G/S.

6. Record 40% Mod. measured value from paragraph 6.24 step 20.

Measured Value_____

7. Adjust 100% (R349) potentiometer until meter indication matches step 6 measured value.

Measured Value (±1.6% Mod.)_____

8. Remove power from NAV-750.

9. Remove circuit board extender and replace PC-3.

10. Apply power to NAV-750.

6.26 VOR BEARING ACCURACY TEST (And Adjustments in Optional Bearing Corrector Ckt. on PC-1)

DESCRIPTION: VOR bearing accuracy is tested with a Bearing Checking Device such as the IFR CS-360(D). Bearing Corrector Ckt. adjustments are in parenthesis.

SPECIFICATIONS: ±0.05°

NOTE

If the above specification is not met, the following calibration procedures must be performed.

Power Supply Voltages
2.16 MHz Oscillator
Tone Distortion
Tone Modulation Levels

(cont'd next page)

6.26 VOR BEARING ACCURACY TEST (cont'd)

TEST EQUIPMENT: Bearing Check Device
Oscilloscope

TEST SET CONDITION: Power On.

PROCEDURE:

1. Set controls as follows:

   FREQUENCY. . . . . 108.000 MHz

   1020 Hz. . . . . UNCAL Fully ccw (0)

   BEARING-FREQ . . . . . BEARING

   TO-FROM. . . . . .TO

2. Press 0° VOR bearing select pushbutton switch and verify that bearing display is 0.00 degrees.

3. Verify that VOR mode indicator is ON.

4. Verify that 1020 Hz UNCAL indicator is ON.

5. Connect vertical input of oscilloscope to NAV-750 rear panel DEMOD jack (J-23).

6. Verify that the 9960 Hz tone, frequency modulated with 30 Hz, and the amplitude modulating 30 Hz tone are present.

7. Disconnect oscilloscope and connect IFR CS-360(D) or equivalent bearing checking device to DEMOD jack (J23).

NOTE

The IFR CS-360(D) may be connected to either the DEMOD jack (J23) or to the RF output connector (J3) on the front panel.

8. Measure bearing error for 0 degrees TO.

9. Bearing error should not exceed ±0.05 degrees.

(Adjust 0° TO Pot. R46 for ≤ 0.05° error) -0.05°_____+0.05°

10. Place NAV-750 TO/FROM switch to FROM position.

11. Measure bearing error for 0 degrees FROM.

(cont'd next page)

6.26 VOR BEARING ACCURACY TEST (cont'd)

12. Bearing error should not exceed ±0.05 degrees.

(Adjust 0° FROM Pot. R19 for ≤ 0.05° error) -0.05°_____+0.05°

13. Press NAV-750 180° VOR bearing select pushbutton and verify that bearing display is 180.00 degrees.

14. Place NAV-750 TO/FROM switch to TO position.

15. Measure bearing error for 180.00 degrees TO.

16. Bearing error should not exceed ±0.05 degrees.

-0.05°_____+0.05°

17. Place the NAV-750 TO/FROM switch to FROM.

18. Measure bearing error for 180.00° FROM.

19. Bearing error should not exceed ±0.05 degrees.

-0.05°_____+0.05°

20. Press NAV-750 90° VAR bearing select pushbutton and verify that bearing display is 90.0 degrees.

21. Place the NAV-750 TO/FROM switch to TO.

22. Measure bearing error for 90.00° TO.

23. Bearing error should not exceed ±0.05 degrees.

(Adjust 90° TO Pot. R18 ≤ 0.05° error) -0.05°_____+0.05°

24. Place NAV-750 TO/FROM switch to FROM.

25. Measure bearing error for 90.00° FROM.

26. Bearing error should not exceed ±0.05 degrees.

(Adjust 90° FROM Pot. R47 for ≤ 0.05° error) -0.05°_____+0.05°

27. Press NAV-750 270° VOR bearing select pushbutton and verify that bearing display is 270° degrees.

28. Place the NAV-750 TO/FROM switch to TO.

29. Measure bearing error for 270° TO.

(cont'd next page)

6.26 VOR BEARING ACCURACY TEST (cont'd)

30. Bearing error should not exceed ±0.05°.

-0.05°_____+0.05°

31. Place the NAV-750 TO/FROM switch to FROM.

32. Measure bearing error for 270° FROM.

33. Bearing error should not exceed ±0.05 degrees.

(Repeat 0° and 90° Adjustments as required) -0.05°_____+0.05°

6.27 VOR BEARING CHECK BOARD ADJUSTMENTS (PC-1)

DESCRIPTION: Bearing verification circuitry on PC-1 is designed to verify the performance of the NAV-750 VOR bearing generator at 90° and 270° and to generate verification information for display on the front panel meter. This procedure adjusts the bearing check board circuitry using the NAV-750 internally generated VOR bearing signals at 90° amd 270° as reference. Prerequisites to this procedure are Paragraph 6.26, VOR Bearing Accuracy Test and Paragraph 6.9 Meter Mechanical Zero Check and Adjustment. Performance Test Reference is Paragraph 5.32. Schematic reference is 3-16-0021.

SPECIFICATION: Meter needle should be centered, meter zero (±0.05°) when selected VOR bearing is 90° or 270°.

TEST EQUIPMENT: Digital Voltmeter
Oscilloscope

TEST SET CONDITION: Power on

PROCEDURE:

1. Set controls as follows:

FREQUENCY. . . . . 108.000 MHz

All Tone Controls. . . . . CAL

MASTER MOD . . . . . CAL

BEARING-FREQ Switch. . . . . BEARING

(cont'd next page)

6.27 VOR BEARING CHECK BOARD ADJUSTMENTS (cont'd)

BEARING ZERO control. . . . . .Mid-position

Meter Function Switch . . . . . .ZERO

2. Press 90° VOR bearing select pushbutton and verify that display is 90.00°.

3. Connect vertical input of oscilloscope to rear panel DEMOD jack (J23) and verify the signal to be a typical VOR signal; a 9960 Hz signal modulated by the 30 Hz REF tone and amplitude modulated with the 30 Hz VAR tone.

4. Disconnect oscilloscope.

5. Using digital voltmeter, measure voltage at collector (case) of Q105; voltage should be +11V dc (±0.2V). If not, adjust +11V ADJ. (R129) potentiometer for +11V dc.

+10.8V dc_____+11.2V dc

6. Connect oscilloscope vertical input to X104 pin 1 and verify that the dc level to be one half (±0.1V) of the supply voltage value recorded in step 5.

+5.3V dc_____+5.7V dc

7. Connect oscilloscope to X102 pin 7. Oscilloscope should display an undistorted 30 Hz sine waveform riding on a dc level. Adjust FREQ (R118) potentiometer until dc level is equal to the dc value recorded in step 6.

8. Adjust ZERO TRIM (R153) potentiometer for a center scale (0°) indication on the front panel meter.

9. Set meter function switch to BRG; allow 5 minutes warm-up time; then reset meter function switch to ZERO and repeat step 8.

10. Set meter function switch to BRG.

11. Alternately select TO and FROM positions of the TO-FROM switch and adjust the PHASE (R130) potentiometer to obtain identical meter indications (not necessarily zero) for both positions of the TO-FROM switch.

12. Adjust BALANCE (R147) potentiometer for a center scale (0°) indication on the front panel meter.

(cont'd next page)

6.27 VOR BEARING CHECK BOARD ADJUSTMENTS (cont'd)

13. Set meter function switch to ZERO. Meter indication should be center scale (0°); if not, readjust ZERO TRIM (R153) potentiometer.

14. Set meter function switch to BRG and readjust BALANCE (R147) potentiometer for a center scale (0°) meter indication.

15. Repeat step 13.

16. Set TO-FROM switch to FROM.

17. Rotate variable BEARING control clockwise until bearing display is 90.50°.

18. Adjust DEFLECTION (R158) potentiometer until meter indicates +0.5° bearing deviation (100% on lower scale which is full scale deflection to the right).

19. Press 90° VOR bearing select pushbutton, set meter function switch to ZERO, and adjust front panel BEARING ZERO control to center meter indication (50% point on lower scale).

20. Set meter function switch to BRG and repeat steps 16, 17, and 18 until no further adjustment of R158 is required.

21. Rotate variable BEARING control counterclockwise until bearing display is 89.50°. (Meter function switch to BRG).

22. Meter should indicate -0.5° bearing deviation (±0.05°). If not, meter is nonlinear or circuit problems exist.

-0.45°_____-0.55°

NOTE

If the requirements of the following steps are not met, repeat steps 9 through 15 and steps 23 through 28.

23. Set TO-FROM switch to TO. Meter should indicate +0.5° bearing error (±0.05°).

+0.45°_____+0.55°

24. Rotate variable BEARING control clockwise until bearing display is 90.50°. Meter should indicate -0.5° bearing deviation (±0.05°).

-0.45°_____-0.55°

(cont'd next page)

6.27 VOR BEARING CHECK BOARD ADJUSTMENTS (cont'd)

25. Press 270° VOR bearing select pushbutton, set meter function switch to ZERO, and adjust front panel BEARING ZERO control for a center scale (0°) indication (50% point on lower scale).

26. Set meter function switch to BRG. Meter needle should remain at 0° (±0.05°).

-0.05°_____+0.05°

27. Rotate variable BEARING control clockwise until bearing display is 270.50°. Meter should indicate +0.5° bearing deviation (±0.05°).

+0.45°_____+0.55°

28. Rotate variable BEARING control counterclockwise until bearing display is 269.50°. Meter should indicate -0.5° bearing deviation (±0.05°).

-0.45°_____-0.55°

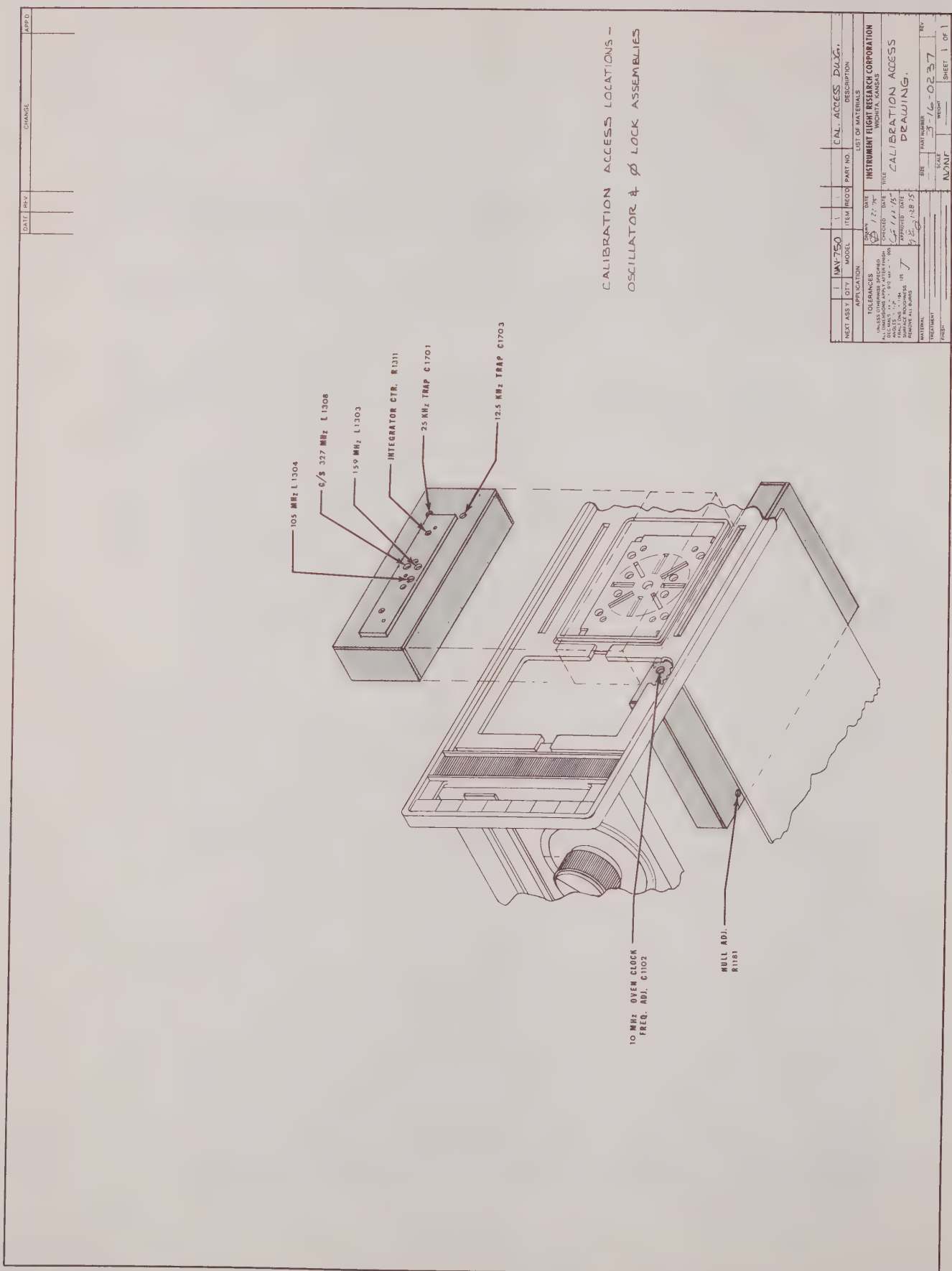
CALIBRATION ACCESS LOCATIONS -
OSCILLATOR & Ø LOCK ASSEMBLIES
105 MHz L1304
G/S 327 MHz L1308
159 MHz L1303
INTEGRATOR CTR. R1311
25 KHz TRAP C1701
12.5 KHz TRAP C1703
10 MHz OVEN CLOCK FREQ. ADJ. C1102
NULL ADJ. R1181
CAL. ACCESS DWG.
INSTRUMENT FLIGHT RESEARCH CORPORATION
WICHITA, KANSAS
CALIBRATION ACCESS DRAWING.
3-16-0237
SHEET 1 OF 1

Figure 6-3

6.28 10 MHz REFERENCE OSCILLATOR (CLOCK) ADJUSTMENT (PHASE-LOCK BOARD)

DESCRIPTION: This procedure adjusts the clock oscillator frequency for the phase-lock loop system with the phase-lock board connected and installed for normal operation. Performance test reference is Paragraph 5.30. Schematic reference is 3-16-0176 or 3-16-0291 for the NAV-750B model.

NOTE

Generally, the +11V dc regulator on the Phase-Lock Board requires adjustment only after a malfunction. For this reason, this procedure does not include removing and opening the Phase-Lock Module to check or set this voltage. When necessary, the +11V dc is set with R1155 for +11V dc (±0.20) on the collector (case) of Q1107. All other adjustments are provided with access openings. (See Figure 6-3).

SPECIFICATIONS: Better than ±1 ppm at 15° to 35°C.

TEST EQUIPMENT: Frequency Counter

PROCEDURE:

1. Set controls as follows:

   ΔF Control . . . . . .CAL

   FREQUENCY . . . . . .110.000 MHz

   MASTER MOD. . . . . UNCAL Max. ccw (0)

   Output Attenuator . . . . . -30 dBm

2. Verify that Ø LOCK indicator is ON.

3. Connect frequency counter to front panel RF output connector (J3).

4. Adjust output attenuator clockwise to obtain reliable counter indication.

5. Adjust C1102 (See Figure 6-3) to obtain counter indication of 110.000 MHz (±100 Hz).

109.9999 MHz_____110.0001 MHz

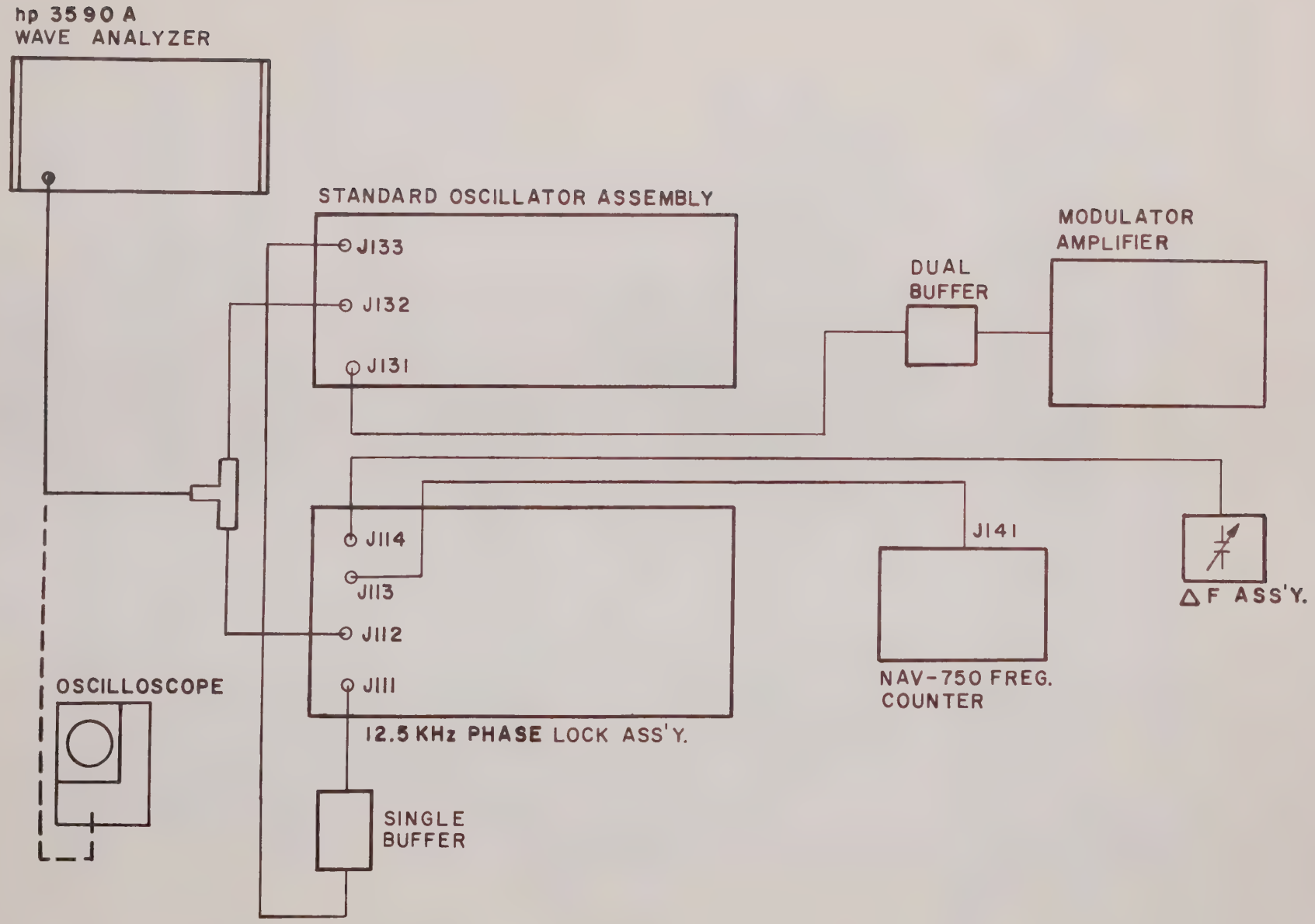
hp 3590 A
WAVE ANALYZER
STANDARD OSCILLATOR ASSEMBLY
J133
J132
J131
DUAL
BUFFER
MODULATOR
AMPLIFIER
J114
J113
J112
J111
12.5 KHz PHASE LOCK ASS'Y.
J141
NAV-750 FREQ.
COUNTER
ΔF ASS'Y.
OSCILLOSCOPE
SINGLE
BUFFER

Figure 6-4

6.29 STANDARD LOW/HIGH BAND OSCILLATOR ADJUSTMENT for NAV-750 ONLY.

DESCRIPTION: This procedure sets the standard Low/High band oscillator in the standard NAV-750 test set. Prerequisites to this procedure are; Paragraph 6.13, Clock Oscillator (2.16 MHz) calibration; and Paragraph 6.28, 10 MHz Reference Oscillator (Clock) Adjustment on the Phase-Lock board. Performance Test reference is 5.33. Schematic references are 3-16-0022 and 3-16-0206.

NOTE

The adjustments outlined in this procedure are set at the factory and should not require realignment during normal operation.

TEST EQUIPMENT:
- Digital Voltmeter
- Oscilloscope
- RF Power Meter
- Wave Analyzer
- Flexible Coaxial Cables, IFR P/N 1-16-0214 (Five required)

PROCEDURE:

1. Remove power from NAV-750.
2. Remove oscillator assembly from NAV-750 and then remove access cover from bottom of oscillator module.
3. Connect oscillator assembly with other RF assemblies as shown in Figure 6-4.
4. Apply power to NAV-750.

11V dc REGULATOR ADJUSTMENT

5. Using DVM, measure voltage on collector (case) of Q1301. Voltage should be +11.0V dc (±0.1V). Adjust +11V ADJUST (R1303) to obtain +11V dc.

10.9V dc_____11.1Vdc

OSCILLATOR FREQUENCY ADJUSTMENTS

6. Set controls as follows:

FREQUENCY. 118.000MHz

BEARING-FREQ Switch. . . . . FREQ

VARIABLE RF Control (ΔF) . . . . . .CAL

(cont'd next page)

6.29 STANDARD LOW/HIGH BAND OSCILLATOR ADJUSTMENT (cont'd)

NOTE

Read all frequencies on NAV-750 Frequency Display

7. Adjust INTEG. CNTR (R1311) potentiometer for high frequency display.

8. Adjust L1303 (black coil form) to obtain a displayed frequency of 132.000MHz.

9. Adjust INTEG. CNTR (R1311) potentiometer for low frequency display. Frequency display should be 106.50 MHz or less.

_____MHz

10. Set FREQUENCY selector switches to 140.000 MHz.

11. Adjust INTEG. CNTR (R1311) potentiometer for high frequency display.

12. Adjust L1304 (violet coil form) to obtain display frequency of 158.50 MHz.

13. Adjust INTEG. CNTR (R1311) potentiometer for low frequency display. Frequency display should be 128.50 MHz or less.

_____MHz

14. Set FREQUENCY selector switches to 338.000 MHz.

15. Adjust INTEG. CNTR (R1311) potentiometer for high frequency display.

16. Adjust L1308 (blue coil form) to obtain a displayed frequency of 337.000 MHz.

17. Adjust INTEG. CNTR (R1311) potentiometer for low frequency display. Frequency display should be 327.50 MHz or less.

_____MHz

INTEGRATOR CENTERING ADJUSTMENT

NOTE

Proper phase-lock operation requires a dc voltage tune line setting that is approximately two-thirds of the voltage (positive) difference obtained in the following steps. There may be some slight oscillation on the tune line, and the dc setting should be above the point where this takes place. The tune line should be free of oscillation during normal operation.

(cont'd next page)

6.29 STANDARD LOW/HIGH BAND OSCILLATOR ADJUSTMENT (cont'd)

18. Connect vertical input of oscilloscope to junction of oscillator jack J-132 and phase-lock assembly jack J-112 using flexible coaxial cables (IFR P/N 1-16-0214) and a "T" connector to monitor the phase-lock tune line with the oscilloscope.

19. Adjust INTEG. CNTR (R1311) potentiometer maximum counter-clockwise and note the dc level displayed on the oscilloscope.
_____(✓)

20. Adjust INTEG. CNTR (R1311) potentiometer maximum clockwise and note the dc level displayed on the oscilloscope.
_____(✓)

21. Adjust R1311 to obtain a dc level display equal to approximately two-thirds of voltage spread between values noted in steps 19 and 20.
_____(✓)

22. Verify that Ø LOCK indicator is ON.

OSCILLATOR OUTPUT CHECK

23. Disconnect coax connector from oscillator J-131 and connect power meter to J-131.

24. Channel NAV-750 from 108.000 MHz through 334.000 MHz in 10 MHz steps and verify that oscillator RF output is 0 dBm (±3 dB).
-3 dBm_____+3 dBm

25. Disconnect power meter from J-131.

26. Remove power from NAV-750.

27. Disconnect coax between oscillator jack J-133 and prescaler buffer.

28. Connect (using short flexible coax cable) oscillator jack J-131 to prescaler buffer (single buffer amplifier) so that phase-lock is maintained).

29. Connect power meter to oscillator J-133.

30. Apply power to NAV-750.

31. Channel NAV-750 from 108.000 MHz through 334.000 MHz in 10 MHz steps and verify that oscillator output is 0 dBm (±3 dB).
-3 dBm_____+3 dBm

(cont'd next page)

6.29. STANDARD LOW/HIGH OSCILLATOR ADJUSTMENT (cont'd)

32. Remove power from NAV-750.

33. Reconnect oscillator assembly with other RF assemblies as shown in Figure 6-4.

PHASE-LOCK LOOP FREQUENCY TRAPS ADJUSTMENTS

34. Disconnect oscilloscope and connect the wave analyzer to the junction of oscillator jack J-132 and phase-lock assembly jack J-112.

35. Adjust NULL (R1181) potentiometer on phase-lock board to maximum counterclockwise position.

36. Tune wave analyzer to 25 kHz.

37. Tune 25 kHz trap by adjusting C1701 for a definite null indication on wave analyzer. _____(✓)

38. Tune wave analyzer to 12.5kHz.

39. Tune 12.5kHz trap by adjusting C1704 for a definite null indication on wave analyzer (46dB below 0.1V or less signal). _____(✓)

40. Remove 12.5kHz jumper.

41. Adjust NULL (R1181) potentiometer on phase-lock board for a mimimum level on wave analyzer. _____(✓)

42. Replace 12.5kHz jumper.

43. Perform paragraph 5.33, Spectral Purity Test for NAV-750, in PERFORMANCE EVALUATION PROCEDURES.

6.30 TEST AND ALIGNMENT PROCEDURE FOR 8-STEP OSCILLATOR

EFFECTIVITY: All NAV-750A test sets prior to S/N 381 and all subsequent NAV-750A test sets with 8-step oscillator option.

DESCRIPTION: The eight-step oscillator board contains 8 oscillators that cover the VHF band from 108.00 to 158.00 MHz. An additional oscillator covers the 329.00 to 335.00 MHz band. Each oscillator is switched on according to the front panel FREQUENCY selection. Prerequisites to this procedure are; Paragraph 6.13, Clock Oscillator (2.16 MHz) calibration; and Paragraph 6.28, 10 MHz Reference Oscillator (Clock) adjustment. This procedure is a guide for test and alignment after improper operation or a malfunction has been uncovered and corrected.

NOTE

The adjustments outlined in this procedure are set at the factory and should not require re-alignment during normal operation.

Performance Test reference is Paragraph 5.34.
Schematic reference is 3-16-0172A.

SPECIFICATIONS: See Performance Evaluation Procedure Specifications in Paragraph 5.34

TEST EQUIPMENT:
Oscilloscope
Digital Voltmeter
RF Power Meter and Wave Analyzer
Flexible Test Cable, IFR P/N 1-16-0214 (five required)
Coaxial TEE Connector, Americon P/N 2091-0000
BNC Adapter, Americon P/N 2081-2321

PROCEDURE:

1. Remove power from NAV-750.

2. Remove 8-step oscillator assembly from NAV-750 and then remove access cover of oscillator module.

3. Connect oscillator assembly with other assemblies as shown in Figure 6-5.

(cont'd next page)

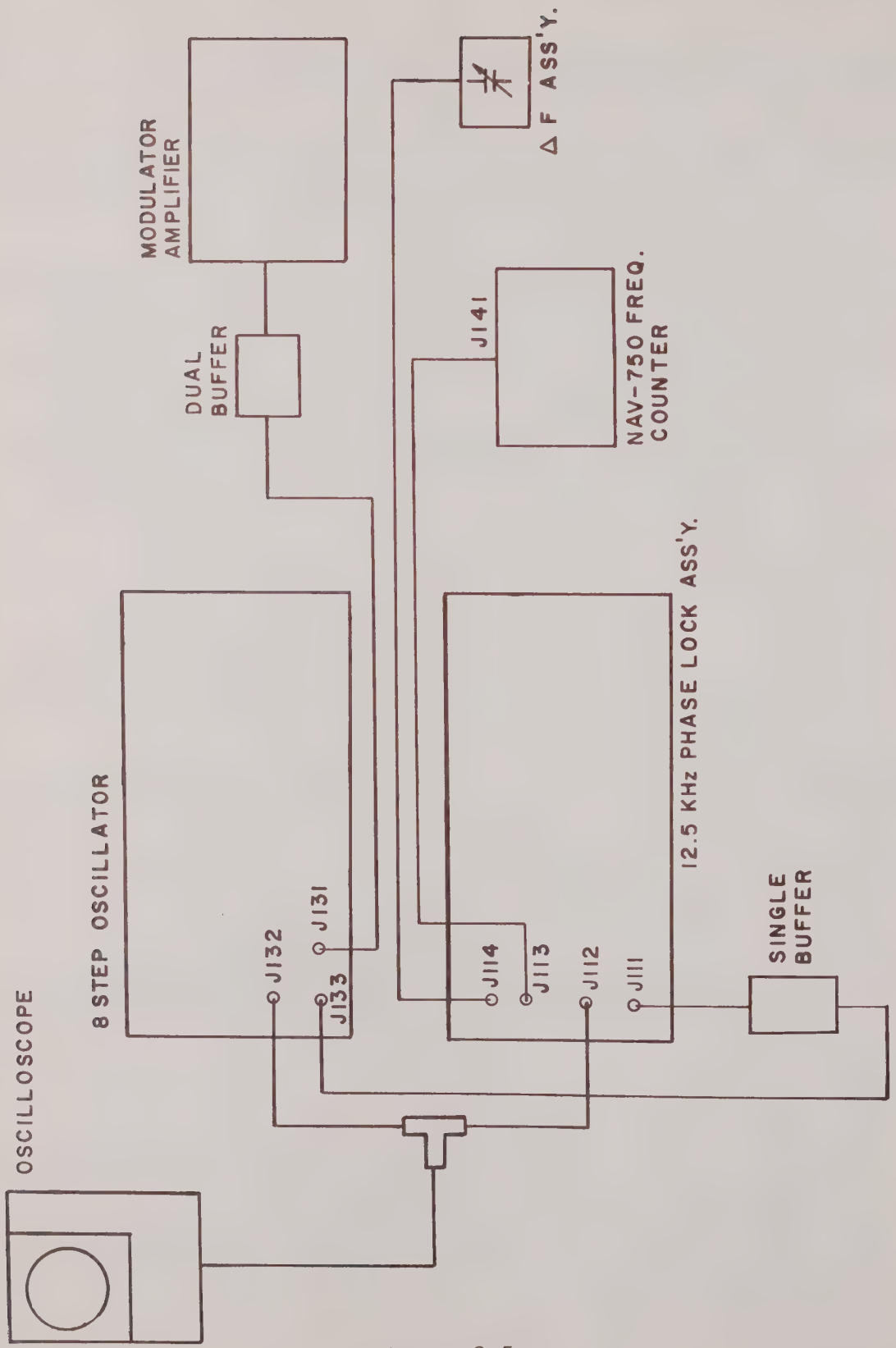
MODULATOR AMPLIFIER
ΔF ASS'Y.
DUAL BUFFER
J141
NAV-750 FREQ. COUNTER
8 STEP OSCILLATOR
12.5 KHz PHASE LOCK ASS'Y.
J132
J131
J133
J114
J113
J112
J111
SINGLE BUFFER
OSCILLOSCOPE

Figure 6-5

6.30 TEST AND ALIGNMENT PROCEDURE FOR 8-STEP OSCILLATOR (cont'd)

4. Apply power to NAV-750 and set controls as follows:

FREQUENCY. . . . . .108.000 MHz

BEARING-FREQ Switch. . . . . .FREQ.

VARIABLE RF Control. . . . . CAL

NOTE

Read all frequencies on NAV-750 frequency display.

11V dc REGULATOR ADJUSTMENT

5. Using DVM, measure voltage on collector (case) of Q1601. Voltage should be +11V dc (±0.1V). Adjust +11V ADJUST (R1606) potentiometer to obtain +11V dc.

10.9V dc_____11.1V dc

6. Using DVM, verify that the subregulated 5.5V dc supply voltage at the emitter of Q1611 is 5.5V dc (±0.7V)

4.8V dc_____6.2V dc

TUNE LOW LIMIT ADJUSTMENT

7. Remove power from NAV-750.

8. Connect a 50 K ohm potentiometer between the collectors of Q1608 and Q1610.

9. Select Osc. No. 1 by positioning all CAL switches to ON.

10. Disconnect phase-lock tune line at oscillator port J-132.

11. Apply power to NAV-750 and connect DVM to collector of Q1610.

12. Adjust potentiometer installed in step 8 to obtain 2.7V dc at collector of Q1610 (±0.05V dc).

2.65V dc_____2.75Vdc

13. Connect DVM to anode of CR1602 and adjust TUNE LIMIT (R1616) potentiometer to obtain 3.1V dc (±0.05V dc).

3.05V dc_____3.15V dc

(cont'd next page)

6.30 TEST AND ALIGNMENT PROCEDURE FOR 8-STEP OSCILLATOR

OSCILLATOR SWITCHING POINT ADJUSTMENT

14. Connect oscilloscope vertical input to X1604 pin 1.

15. Adjust LOW OPERATION LIMIT (R1684) potentiometer to the point at which X1604 pin 1 voltage begins to switch.

_____(✓)

NOTE

Read all frequencies on NAV-750 Frequency Display.

INDIVIDUAL OSCILLATOR FREQUENCY ADJUSTMENTS

16. Remove power from NAV-750.

17. Disconnect potentiometer installed in step 8.

18. Ensure that phase-lock tune line is disconnected at J-132.

19. Using the list below, manually select each oscillator with CAL SWITCH and verify that the associated oscillator LED is ON and adjust the appropriate oscillator tuning coil (and capacitor for OSC. No. 9) for the correct frequency display.

Osc.	CAL (DIP) Switch S1	S2	S3	S4	OSCILLATOR Adjustment	FREQ. MHz
1	ON	ON	ON	ON	L1605	115.2_____115.4
2	OFF	ON	ON	ON	L1607	120.7_____120.9
3	ON	OFF	ON	ON	L1609	126.5_____126.7
4	OFF	OFF	ON	ON	L1611	132.6_____132.8
5	ON	ON	OFF	ON	L1619	139.0_____139.2
6	OFF	ON	OFF	ON	L1617	145.6_____145.8
7	ON	OFF	OFF	ON	L1615	152.7_____152.9
8	OFF	OFF	OFF	ON	L1613	159.9_____160.1
*9	ON	ON	ON	ON	C1661	336.9_____337.1

*Also select 330 MHz on FREQUENCY selector switches.

(cont'd next page)

6.30 TEST AND ALIGNMENT PROCEDURE FOR 8-STEP OSCILLATOR (cont'd)

OSCILLATOR LOW RANGE CHECK

20. Remove power to NAV-750 and then connect a 50 K ohm potentiometer between the collectors of Q1608 and Q1610.

21. Apply power to NAV-750 and measure the voltage on the collector of Q1610 using a DVM and then adjust the potentiometer installed in step 20 to obtain a DVM indication of 2.7V dc.

2.65V dc_____2.75V dc

22. Set CAL SWITCHES (Dip) as follows and verify that the low frequency of each oscillator is within the specified range:

Osc.	CAL Switch S1	S2	S3	S4	Low FREQ. (MHz)
1	ON	ON	ON	ON	103.0_____106.0
2	OFF	ON	ON	ON	108.3_____111.3
3	ON	OFF	ON	ON	113.8_____116.8
4	OFF	OFF	ON	ON	119.6_____122.6
5	ON	ON	OFF	ON	125.7_____128.7
6	OFF	ON	OFF	ON	132.1_____135.1
7	ON	OFF	OFF	ON	138.7_____141.7
8	OFF	OFF	OFF	ON	145.8_____148.8
*9	ON	ON	ON	ON	320.0_____327.2

*Select 337 MHz on FREQUENCY selector switches.

OSCILLATOR OUTPUT CHECK

23. Remove power from NAV-750.

24. Disconnect and remove 50 K ohm potentiometer installed in step 20.

25. Position CAL switches to AUTO slect as follows:

S1 ON
S2 ON
S3 ON
S4 OFF

(cont'd next page)

6.30 TEST AND ALIGNEMENT PROCEDURE FOR 8-STEP OSCILLATOR (cont'd)

26. Connect the phase-lock tune line to J-132.

27. Disconnect coax. connector from 8-step oscillator J-131 and connect RF power meter to J-131.

28. Power meter should indicate 0 dBm (±3 dB) at 337.000 MHz oscillator frequency.

-3 dBm_____+3 dBm

29. Set NAV-750 FREQUENCY selector switches to 115.30 MHz and verify that phase-lock indicator is ON.

30. Power meter should indicate 0 dBm (±3 dB) at 115.30 MHz oscillator frequency.

-3 dBm_____+3 dBm

31. Disconnect power meter from J-131.

32. Remove power from NAV-750.

33. Disconnect coax. between oscillator jack J-133 and prescaler buffer.

34. Connect (using short flexible coax cable) oscillator jack J-131 to prescaler buffer (single buffer amplifier) so that phase-lock is maintained.

35. Connect power meter to 8-step oscillator J-133.

36. Apply power to NAV-750. Oscillator frequency of 115.30 MHz should be displayed and the phase-lock indicator should be ON.

37. Power meter should indicate 0 dBm (±3 dB) at 115.30 MHz oscillator frequency.

-3 dBm_____+3 dBm

38. Set NAV-750 FREQUENCY selector switches to 337.00 MHz and verify that phase-lock indicator is ON.

39. Power meter should indicate 0 dBm (±3 dB) at 337.00 MHz oscillator frequency.

-3 dBm_____+3 dBm

40. Remove power from NAV-750.

(cont'd next page)

6.30 TEST AND ALIGNMENT PROCEDURE FOR 8-STEP OSCILLATOR (cont'd)

INTEGRATOR CENTERING ADJUSTMENT

41. Using flexible coax cables and TEE connector, connect oscilloscope to monitor the phase-lock tune line. (see Fig. 6-5).

42. Set NAV-750 FREQUENCY selector switches to 115.30MHz and verify that phase-lock indicator is on.

43. Adjust INTEG. CNTR (R1626) potentiometer to maximum counterclockwise position and note the dc level on the oscilloscope.

_____Vdc

44. Adjust INTEG. CNTR (R1626) potentiometer to maximum clockwise position and note the dc level on the oscilloscope.

_____Vdc

45. Verify that the difference between voltages noted in steps 42 and 43 is at least 3 volts.

_____(✓)

46. Adjust INTEG. CNTR (R1626) potentiometer to obtain a dc level centered between the values noted in steps 42 and 43.

NOTE

Exact integrator centering causes excessive residual FM in some units. R 1626 may require a very slight adjustment during Residual FM Check to reduce residual FM.

PHASE-LOCK LOOP FREQUENCY TRAPS ADJUSTMENTS

47. Disconnect oscilloscope and connect the wave analyzer to the junction of the oscillator jack J-132 and Phase-Lock Assembly jack J-112.

48. Adjust NULL (R1181) potentiometer on phase-lock board to maximum counterclockwise position.

49. Tune wave analyzer to 25kHz.

50. Tune 25kHz trap by adjusting C1610 for a definite null indication on wave analyzer.

_____(✓)

(cont'd next page)

6.30 TEST AND ALIGNMENT PROCEDURE FOR 8-STEP OSCILLATOR (cont'd)

51. Tune wave analyzer to 12.5kHz.

52. Tune 12.5kHz trap by adjusting C-1613 for a definite null indication on wave analyzer. _____(✓)

53. Remove 12.5kHz jumper (the longer of the two).

54. Adjust NULL (R1181) potentiometer on phase-lock board for a minimum level on wave analyzer. _____(✓)

55. Replace 12.5kHz jumper.

56. Remove power from NAV-750 and reinstall oscillator and coax systems to normal configuration.

57. Perform Spectral Purity Test, paragraph 5.34.

6.31 TEST AND ALIGNMENT PROCEDURE for NAV-750 A/B OSCILLATOR

EFFECTIVITY: NAV-750-A S/N 402 and on
NAV-750-B S/N 2001 and on

DESCRIPTION: This procedure sets the oscillator in the NAV-750 A/B test sets. Prerequisities to this procedure are; Paragraph 6.13, Clock Oscillator (2.16 MHz) calibration; and Paragraph 6.28, 10 MHz Reference Oscillator (Clock) Adjustment on the phase-lock board. Performance Test reference is Paragraph 5.34 for the NAV-750 A and Paragraph 5.35 for the NAV-750 B model. Schematic reference for the NAV-750 A is 4-16-0334 and 4-16-0285 for the NAV-750 B.

NOTE

The adjustments outlined in this procedure are set at the factory and should not require realignment during normal operation.

SPECIFICATIONS: See Performance Evaluation Procedure Specifications in Paragraph 5.34 for the NAV-750 A and Paragraph 5.35 for the NAV-750 B.

TEST EQUIPMENT: Digital Voltmeter
RF Power Meter
Flexible Test Cable, IFR P/N 1-16-0214 (five required)
Coax TEE Connector, Americon P/N 2091-0000
BNC Adaptor, Americon P/N 2081-2321

PROCEDURE:

1. Remove power from NAV-750.

2. Remove oscillator assembly from NAV-750 and then remove cover from bottom of oscillator module.

3. Connect oscillator assembly with other assemblies as shown in Figure 6-6.

4. Apply power to NAV-750.

11V dc CHECK

5. Connect DVM to emitter of Q3. DVM should indicate +11V dc (-1V dc +2V dc).

10V dc_____13V dc

NOTE

Read all frequencies on NAV-750 Frequency Display

(cont'd next page)

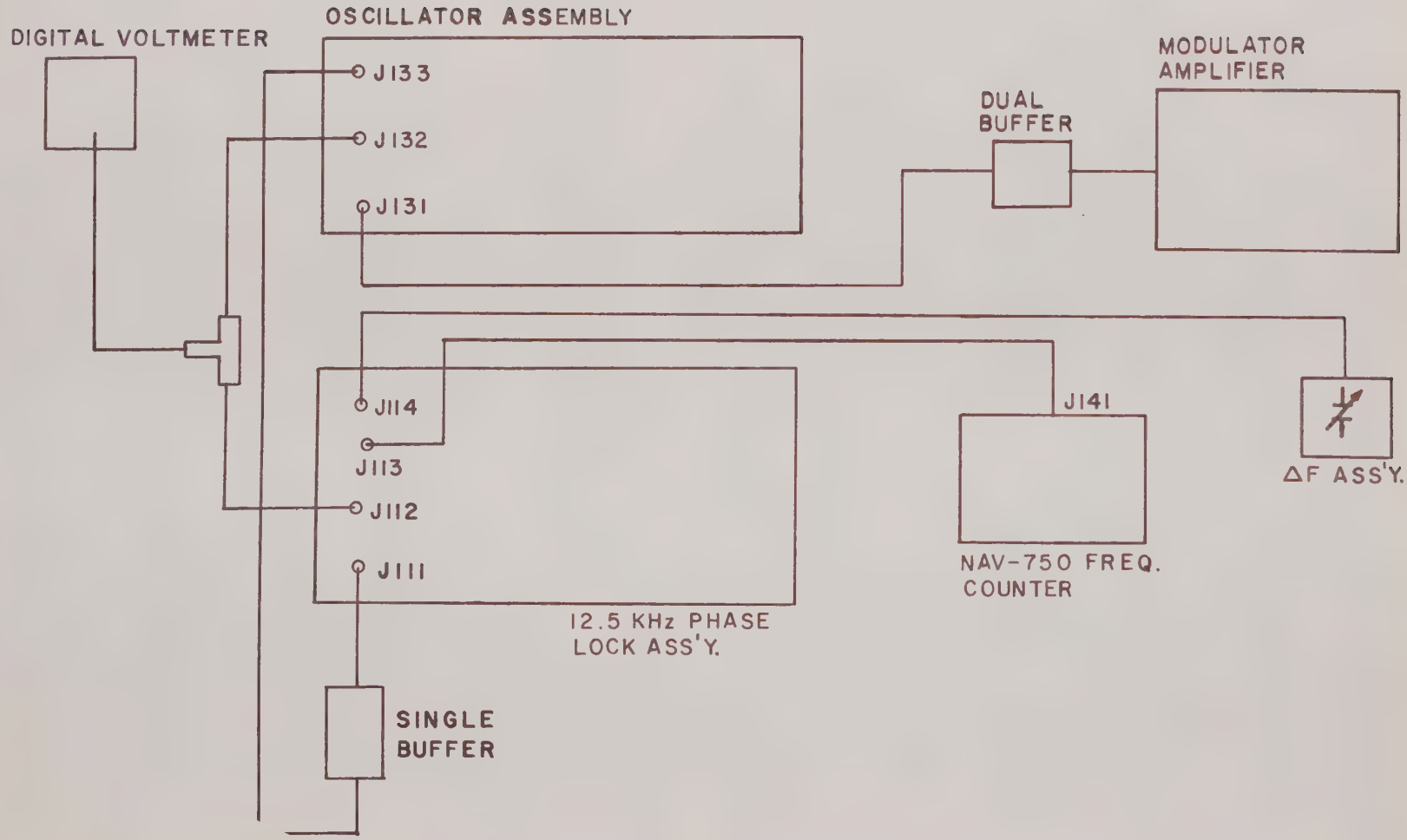
DIGITAL VOLTMETER
OSCILLATOR ASSEMBLY
J133
J132
J131
DUAL BUFFER
MODULATOR AMPLIFIER
J114
J113
J112
J111
12.5 KHz PHASE LOCK ASS'Y.
J141
NAV-750 FREQ. COUNTER
ΔF ASS'Y.
SINGLE BUFFER

Figure 6-6

6.31 TEST AND ALIGNMENT PROCEDURE FOR NAV-750A/B OSCILLATOR (cont'd)

G/S OSCILLATOR FREQUENCY ADJUSTMENT

6. Set controls as follows:

FREQUENCY. . . . . .350.000 MHz

BEARING-FREQ Switch. . . . . .FREQ.

VARIABLE RF Control. . . . . .CAL

7. Adjust variable capacitor C-30 until frequency display is between 340.000 MHz and 341.000 MHz.

340.000MHz_____341.000MHz

8. Using FREQUENCY selector switches, select frequencies as listed below and verify that frequency display matches selected frequency and that phase-lock indicator comes on, within one second, at each frequency.

108.000 MHz thru 129.975 MHz Ø lock ON _____(✓)
130.000 MHz thru 157.950 MHz Ø lock ON _____(✓)
329.000 MHz thru 335.000 MHz Ø lock ON _____(✓)

and for the NAV-750 B Model:
70.000 MHz thru 79.000 MHz Ø lock ON _____(✓)

OSCILLATOR OUTPUT CHECK

9. Disconnect coax connector from oscillator J-131 and connect power meter to J-131.

10. Channel NAV-750 from 108.000 MHz through 335.000 MHz in 10 MHz steps and verify that power output is between -6 dBm and +10 dBm.

-6 dBm to +10 dBm_____(✓)

NOTE

Perform Step 11 for NAV-750 B only.

11. Channel NAV-750 from 70.000 MHz through 79.000 MHz in 1 MHz steps and verify that power output is between -6 dBm and +10 dBm.

-6 dBm to +10 dBm_____(✓)

12. Disconnect power meter from J-131.

13. Remove power from NAV-750.

(cont'd next page)

6.31 TEST AND ALIGNMENT PROCEDURE FOR NAV-750 A/B OSCILLATOR (cont'd)

14. Disconnect coax between oscillator jack J-133 and prescaler buffer.

15. Connect (using short flexible coax cable) oscillator jack J-131 to prescaler buffer (single buffer amplifier) so that phase-lock is maintained.

16. Connect power meter to oscillator J-133.

17. Apply power to NAV-750.

18. Channel NAV-750 from 108.000 MHz through 335.000 MHz in 10 MHz steps and verify that oscillator output is between -6 dBm and +10 dBm.

-6 dBm to +10 dBm_____(✓)

NOTE

Perform Step 19 for NAV-750 B only.

19. Channel NAV-750 from 70.000 MHz through 79.000 MHz in 1 MHz steps and verify that power output is between -6 dBm and +10 dBm.

-6 dBm to +10 dBm_____(✓)

20. Remove power from NAV-750.

21. Reconnect oscillator assembly with other RF assemblies as shown in Figure 6-6.

TUNING INTEGRATOR INPUT OFFSET ADJUSTMENT

22. Set FREQUENCY control selector switches to 108.000 MHz.

23. Apply power to NAV-750.

24. Connect DVM to TEE connector in coax line between oscillator J-132 12.5kHz phase-lock assembly J-112 (See Figure 6-6) to monitor phase-lock voltage at J-132.

25. Position R-2 on oscillator board to counterclockwise limit and note voltage on DVM.

_____V dc

26. Position R-2 to clockwise limit and note voltage on DVM.

_____V dc

(cont'd next page)

6.31 TEST AND ALIGNMENT PROCEDURES FOR NAV-750 A/B OSCILLATOR (cont'd)

27. Determine the mean voltage as follows:

$$\frac{V_1 + V_2}{2} = \text{Mean Voltage} \quad \_\_\_\_\_ \text{V dc}$$

Where: V_1 is the larger voltage measured in step 25 and 26.

V_2 is the smaller voltage measured in step 25 and 26.

28. Set R-2 to obtain mean voltage (as determined in step 27) on DVM, ± 20% of voltage spread. Voltage spread is $V_1 - V_2$.

Mean Voltage (±20% of V_1-V_2)_____V dc

PHASE-LOCK LOOP FREQUENCY TRAPS ADJUSTMENTS

29. Remove power from NAV-750.

30. Disconnect coax connector from oscillator jack J-132.

31. Connect oscillator output through a 1K ohm resistor to J-132.

32. Connect oscilloscope vertical input to trap side (J-132) of 1K ohm resistor.

33. Set oscillator frequency to 12.5kHz and output level to 1 volt p-p.

34. Adjust C-33 for minimum 12.5kHz indication on oscilloscope.

Minimum 12.5kHz_____(✓)

35. Set oscillator frequency to 25kHz (±120 Hz) and output level to 1 volt p-p.

36. Adjust C-3 for minimum 25kHz signal oscilloscope.

Minimum 25kHz_____(✓)

37. Disconnect oscillator and oscilloscope.

38. Reinstall oscillator and coax systems to normal configuration.

39. Perform the appropriate Spectral Purity Test; Paragraph 5.34 for the NAV-750 A or Paragraph 5.35 for the NAV-750 B.

6.32 MODULATOR AMPLIFIER CHECK AND ADJUSTMENT PROCEDURE.

EFFECTIVITY: Up to and including NAV-750 S/N 407.
Up to and including NAV-750A S/N 380.

DESCRIPTION: The Modulator Amplifier is one of the RF assemblies housed in a shielded box and mounted on the floor of the NAV-750. The Modulator Amplifier receives the oscillator RF signal at J-112 from a separate buffer amplifier stage. The Modulator Amplifier consists of several RF stages and RF modulation circuitry. A demodulator in this circuitry feeds the RF Leveling circuitry and also provides a DEMOD signal at the rear panel jack J-23.

The point at which the modulation and the RF meet is extremely important in the calibration of the Modulator Amplifier. The circuitry in this assembly determines the level of the RF signal to the output attenuator, and also determines the ability of the RF signal to be modulated at the proper level. The RF level input to the Modulator Amplifier should be at least 0 dBm (±3.0 dB) and the output should be 0 dBm (±1.0 dB).

The Modulator Amplifier contains two separate switch selected strings of RF stages -- one string for the low frequency band and one for the G/S frequency band. The actual switching is done in the Modulator Amplifier, but the signal that actuates the switch is generated by the operator through the function of the Frequency Control Board. Schematic Reference is 3-16-0060. Performance Evaluation reference is Paragraph 5.33 for the NAV-750 and Paragraph 5.34 for the NAV-750A models.

SPECIFICATIONS: See Performance Evaluation Procedures Specification in Paragraph 5.33 for the NAV-750 and Paragraph 5.34 for the NAV-750A models.

TEST EQUIPMENT:

Digital Voltmeter	RF Power Meter
RF Sweep Generator	Audio Oscillator
Oscilloscope	Spectrum Analyzer

PROCEDURE:

1. Remove power from NAV-750.
2. Remove modulator amplifier assembly from NAV-750 and access cover from mod. amp. module.

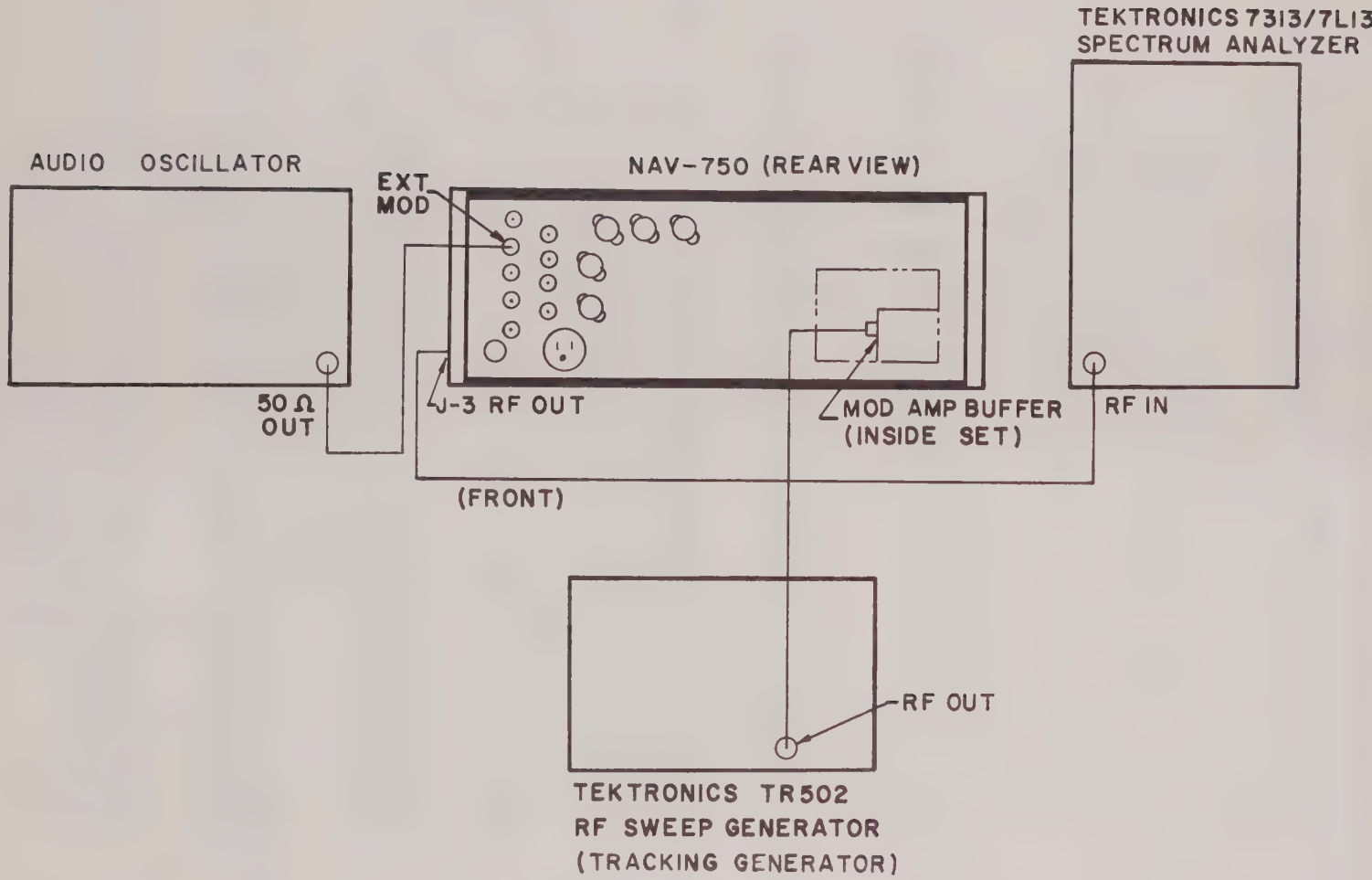
TEKTRONICS 7313/7L13
SPECTRUM ANALYZER
AUDIO OSCILLATOR
EXT
MOD
NAV-750 (REAR VIEW)
50 Ω
OUT
J-3 RF OUT
MOD AMP BUFFER
(INSIDE SET)
RF IN
(FRONT)
RF OUT
TEKTRONICS TR502
RF SWEEP GENERATOR
(TRACKING GENERATOR)

Figure 6-7

6.32 MODULATOR AMPLIFIER CHECK AND ADJUSTMENT PROCEDURE (cont'd)

3. Connect mod. amp. assembly with other RF assemblies as shown in Figure 6-7.

4. Apply power to the NAV-750.

LOW BAND RF LEVEL ADJUSTMENT:

5. Set controls as follows:

FREQUENCY. . . . . .132.000 MHz

All Tone Level Controls. . . . . .CAL

BEARING-FREQ Switch. . . . . FREQ

6. Connect vertical input of oscilloscope to DEMOD jack (J23) and verify that oscilloscope display is demodulated 1020Hz tone.

7. Adjust MASTER MOD control and 1020Hz modulation level control until displayed waveform indicates clipping on the negative portion with no evidence of clipping on the positive portion.

8. Verify that the front panel OVERMOD indicator is ON when the waveform shows clipping.

9. Adjust MASTER MOD to UNCAL maximum counterclockwise (0).

10. Connect the digital voltmeter to TP △3 (schematic 3-16-0060) to monitor the detected dc voltage level. The dc level should be 5.0 and 5.6 volts dc.

5.0Vdc_____5.6Vdc

11. Advance FREQUENCY selector switches from 108.000MHz to 157.950MHz and verify that detector dc level does not vary more than ±0.075Vdc from level recorded in step 10.

Step 10 dc level, (±0.075Vdc)_____(✓)

12. Connect RF power meter to mod. amp. J121 and adjust RF LEVEL (R1218) potentiometer for 0 dBm (±0.2dBm) RF power meter indication.

-0.2dBm_____+0.2dBm

13. Advance FREQUENCY selector switches from 108.000 MHz to 157.950 MHz and verify that the output level at J121 to be 0 dBm (±1.0 dB).

-1.0dBm_____+1.0dBm

(cont'd next page)

6.32 MODULATOR AMPLIFIER CHECK AND ADJUSTMENT PROCEDURE (cont'd)

G/S RF LEVEL AND TUNING ADJUSTMENT

14. Set controls as follows:

FREQUENCY. . . . . 332.000 MHz

All Tone Level Controls. . . . . CAL

BEARING-FREQ Switch. . . . . .FREQ

G/S and LOC DDM Selector Switches. 0

Meter Function Switch. 0-100

15. Connect vertical input of oscilloscope to DEMOD jack (J23) and verify the demodulated signal to be the composite 90 Hz and 150 Hz waveform normally associated with G/S modulation.

NOTE

If the requirements of step 16 are not met, perform step 17 through 23, otherwise omit steps 17 through 23.

16. Adjust MASTER MOD control clockwise until waveform indicates clipping on the negative portion with no clipping evident on the positive portion of the waveform. Clipping should not occur before 95% modulation and positive clipping should not occur before negative clipping.

_____(✓)

17. Connect test equipment (See Figure 6-7) as follows:

A. Connect audio oscillator 50 ohm output to NAV-750 EXT MOD jack J-18.

B. Connect spectrum analyzer RF input to NAV-750 front panel RF output connector J-3.

C. Remove semi-rigid coax connection to NAV-750 mod. amp. buffer and connect RF sweep generator to Mod. Amp. buffer.

(cont'd next page)

6.32 MODULATOR AMPLIFIER CHECK AND ADJUSTMENT PROCEDURE (cont'd)

18. With sweep off, set tracking generator RF out to exactly 332.000 MHz.

19. Adjust spectrum analyzer sweep width for 0.5 MHz per division.

20. Adjust audio oscillator FREQUENCY for best oscilloscope display (approx. 1kHz) and set LEVEL for 9 volts p-p.

21. Detune C-1221 slightly and then adjust C-1239 for maximum amplitude with the slight peak exactly in the middle of the display.

22. Adjust C-1221, C-1224, C-1283, and C-1232 for maximum amplitude with equal high and low roll off.

23. Place cover on amplifier while watching display. If amplifier detunes, a special cover with adjustment holes is required.

24. Adjust MASTER MOD control to UNCAL maximum counterclockwise (0).

25. Connect RF power meter to Mod. Amp. J121 and adjust RF LEVEL (R1227) potentiometer to obtain 0 dBm (±0.2 dBm) indication on RF power meter.

    -0.2dBm_____+0.2dBm

26. Advance FREQUENCY selector switches from 328.000 MHz to 338.000 MHz and verify that the output level at J121 to be 0 dBm (±1.0 dB).

    -1.0dBm_____+1.0dBm

27. Disconnect test equipment and return set to normal configuration.

28. Connect oscilloscope vertical input to DEMOD jack (J23).

29. While observing demodulated output (J23) on oscilloscope verify set capability to modulate to near 100% as frequency is advanced from 328.000 MHz to 338.00 MHz. Adjust MASTER MOD control as required.

    _____(✓)

30. To verify calibration procedure, perform Spectral Purity Test, Paragraph 5.33 for NAV-750 and Paragraph 5.34 for NAV-750A in PERFORMANCE EVALUATION PROCEDURES.

6.33 MODULATOR AMPLIFIER CHECK AND ADJUSTMENT PROCEDURE

EFFECTIVITY: NAV-750 S/N 408 and on
NAV-750A S/N 381 and on
NAV-750B S/N 2001 and on

DESCRIPTION: This procedure includes the PIN Modulator Drive Adjustment, the G/S Output Tuning Adjustment, the RF Output Adjustment, and the Modulator Dynamic Range Adjustment. Schematic reference is 4-16-0337 for the NAV-750 and NAV-750A, and 4-16-0272 for the NAV-750B. Performance Evaluation reference is Paragraph 5.33, 5.34, or 5.35.

SPECIFICATIONS: Paragraph 5.33 for NAV-750, Paragraph 5.34 for NAV-750A, or Paragraph 5.35 for NAV-750B.

TEST EQUIPMENT: RF POWER METER
Digital Voltmeter
Oscilloscope

PROCEDURE:

PIN MODULATOR DRIVE ADJUSTMENT

1. Set controls as follows:

   FREQUENCY. . . . . .108.000 MHz

   MASTER MOD control . . . . . UNCAL, fully ccw (0)

2. Connect DVM to pin 6 of X3 (Feedback Amp).

3. Adjust RF Leveler (R-51) potentiometer to obtain +1V dc (±0.1V) on DVM.

   +0.9V dc_____+1.1V dc

G/S OUTPUT TUNING ADJUSTMENT

4. Set FREQUENCY selector switches to 334.700 MHz.

5. Connect RF power meter to Mod/Amp output jack J121 and verify output level to be 0 dBm (±1 dB).

6. If output at J121 is too high, adjust C-49 to obtain minimum output or 0 dBm on RF power meter.

NOTE

If output level after step 7 is more than +2dBm, repeat steps 6, 7, and 8. This output level is set in the G/S RF OUTPUT Adjustment procedure.

(cont'd next page)

6.33 MODULATOR AMPLIFIER CHECK AND ADJUSTMENT PROCEDURE (cont'd)

7. Adjust C-36 for minimum voltage on pin 6 of X3.

8. If output at J-121 is not 0 dBm (±1 dB), adjust C-49.

-1 dBm_____+1 dBm

RF OUTPUT ADJUSTMENT

9. Set FREQUENCY selector switches to 108.000 MHz.

10. Adjust R-32 to obtain 0 dBm (±0.2 dB) on RF power meter connected to J-121.

-0.8 dBm_____+0.2 dBm

11. Set FREQUENCY selector switches to 337.000 MHz.

12. Adjust C-49 to obtain 0 dBm (±0.2 dB) on RF power meter connected to J-121.

-0.8 dBm_____+0.2 dBm

MODULATOR DYNAMIC RANGE MEASUREMENT

13. Set controls as follows:

FREQUENCY. . . . . 334.700 MHz

Meter Function switch. 0-100

G/S DDM Selector switch. 90Hz

LOC DDM Selector switch. 150Hz

14. Adjust 1020 Hz Tone Modulation Level control fully clockwise.

15. Connect oscilloscope vertical input to DEMOD jack J-23.

16. Adjust MASTER MOD control clockwise until OVERMOD indicator just turns ON. Meter modulation indication should be 93% or greater.

93%_____

17. Adjust MASTER MOD control to OFF (UNCAL).

18. Set FREQUENCY selector switches to 108.100 MHz.

19. Adjust MASTER MOD control clockwise until meter modulation indication is 100%. Positive peak of demodulated waveform (1020Hz at DEMOD jack J-23) on oscilloscope should not be clipped. Negative portion of waveform may be clipped slightly.

_____(✓)

(cont'd next page)

6.33 MODULATOR AMPLIFIER CHECK AND ADJUSTMENT PROCEDURE (cont'd)

20. To verify calibration procedure, perform Spectral Purity Test, Paragraph 5.33 in PERFORMANCE EVALUATION PROCEDURES for NAV-750 or Paragraph 5.34 for NAV-750 A, or Paragraph 5.35 for NAV-750 B.

6.34 PERFORMANCE CHECK OF SINGLE AND DOUBLE RF BUFFER ASSEMBLIES

EFFECTIVITY: Up to and including NAV-750 S/N 402
Up to and including NAV-750A S/N 380

DESCRIPTION: There are no adjustments for the single and double buffer assemblies. This procedure is valid for both the single and the double buffer assemblies.

SPECIFICATIONS: Output should be between -31 dBm to -20 dBm with -30 dBm input from 108.000 MHz to 337.000 MHz for both single and double RF Buffer Assemblies.

TEST EQUIPMENT: RF Sweep Signal Generator
Spectrum Analyzer

PROCEDURE:

1. Remove the buffer amplifier (either single or double or both) assembly from the NAV-750 under test and apply +12V dc to the buffer amplifier as in normal operation.

2. Connect RF sweep generator to the buffer amplifier input and sweep the frequency range between 108.000 MHz and 337.000 MHz with the generator output at -30 dBm.

3. Connect the output of the buffer amplifier to the spectrum analyzer and verify the output to be between -31dBm and -20 dBm from 108.000MHz to 337.000MHz.

-31 dBm_____-20 dBm

4. Disconnect test equipment and reinstall buffer assembly.

6.35 PERFORMANCE CHECK OF SINGLE AND DOUBLE RF BUFFER ASSEMBLIES

EFFECTIVITY: NAV-750 S/N 403 and on.
NAV-750A S/N 381 and on.
NAV-750B S/N 2001 and on.

DESCRIPTION: There are no adjustments for the single and double buffer assemblies. This procedure checks operation of the buffer assemblies.

SPECIFICATIONS: SINGLE BUFFER

Output should be between -33 dBm to -24 dBm with -30 dBm input from 70.000 MHz to 335.000 MHz.

DOUBLE BUFFER

Output should be between -33 dBm to -20 dBm with -30 dBm input from 70.000 MHz to 335.000 MHz.

TEST EQUIPMENT: RF Sweep Signal Generator
Spectrum Analyzer.

PROCEDURE:

1. Remove the buffer amplifier assemblies from the NAV-750 under test and apply +12V dc to the buffer as in normal operation.

2. Connect RF sweep generator to the single or double buffer amplifier input.

3. SINGLE BUFFER: Connect the output of the buffer amplifier to the spectrum analyzer and sweep the frequency range between 70.000 MHz and 335.000 MHz with the generator output at -30 dBm. Verify the output to be between -33 dBm and -24 dBm over the entire frequency range.

-33 dBm_____-24 dBm

3A. DOUBLE BUFFER: Connect the output of the buffer amplifier to the spectrum analyzer and sweep the frequency range between 70.000 MHz and 335.000 MHz with the generator output at -30 dBm. Verify the output to be between -33 dBm and -20 over the entire frequency range.

-33 dBm_____-20 dBm

4. Disconnect test equipment and reinstall buffer assemblies.

CALIBRATION TEST DATA SHEET

6.9 METER MECHANICAL ZERO CHECK AND ADJUSTMENT _____(✓)

6.10 INITIAL PROCEDURE

6.10.3 Record line voltage _____Vac

6.11 POWER SUPPLY VOLTAGE TEST

6.11.1 Test Point	Voltage	Ripple Voltage
Neg. (-) lead on C1602 (unreg).	(-17_____-22Vdc)	_____(2V p-p Max.)
Reg. X1601	(+22_____+25.2Vdc)	_____(20mV p-p Max.)
Reg. X1602	(+11.4_____+12.6Vdc)	_____(15mV p-p Max.)
Reg. X1603	(+4.7_____+5.3Vdc)	_____(15mV p-p Max.)
Reg. X1604	(-11.4_____-12.6Vdc)	_____(15mV p-p Max.)
High Voltage test point	(+155_____+180Vdc)	N/A
Collector of Q314	(+10.9_____+11.1Vdc)	_____(30mV p-p Max.)
Collector of Q313	(-10.9_____-11.1Vdc)	_____(30mV p-p Max.)

6.12 POSITIVE AND NEGATIVE 11V dc POWER SUPPLY TEST AND ADJUSTMENT (PC-3)

6.12.4	+11V dc		+10.9Vdc_____+11.1Vdc
6.12.5	-11V dc		-10.9Vdc_____-11.1Vdc
6.12.6	+11 and -11 Vdc	Value Balance	-0.150Vdc_____+0.150Vdc
6.12.8	+11V dc Adjustment		+10.9Vdc_____+11.1Vdc
6.12.9	-11V dc Check		+10.9Vdc_____+11.1Vdc
6.12.10	+11 and -11V dc	Value Balance	-0.150Vdc_____+0.150Vdc
6.12.11	-11V dc Adjustment		-10.9Vdc_____-11.1Vdc

6.13 CLOCK OSCILLATOR (2.16MHz) CALIBRATION (PC-4)

6.13.5	Oscillator Adjustment	2,159,568Hz	_____2,160,432Hz
6.13.6	30Hz Ref. Frequency	29.994Hz	_____30.006Hz
6.13.9	30Hz Ref. Symmetry & time duration		_____(✓)

6.13.11	30Hz Var. (FROM) Frequency	29.994Hz_____	30.006Hz
6.13.13	30Hz Var. Symmetry & time duration	_____	(✓)
6.13.15	30Hz Var. (TO) Frequency	29.994Hz_____	30.006Hz
6.13.17	30Hz Var. Symmetry & time duration	_____	(✓)
6.13.19	90Hz Frequency	89.982Hz_____	90.018Hz
6.13.21	90Hz Symmetry & time duration	_____	(✓)
6.13.23	150Hz Frequency	149.97Hz_____	150.03Hz
6.13.25	150Hz Symmetry & time duration	_____	(✓)

6.14 VOR, 30Hz REF. AND 30Hz VAR. TONE DISTORTION ADJUSTMENTS (PC-2)

6.14.5	30Hz Ref. Tone Distortion	0%_____	0.5%
6.14.8	30Hz Var. Tone Distortion	0%_____	0.5%

6.15 IDENT. (1020Hz) AND MARKER BEACON TONE ADJUSTMENTS (PC-2)

6.15.8	1020Hz Tone Frequency	1014.9Hz_____	1025.1Hz
6.15.10	1020Hz Tone Distortion	0%_____	0.5%

(The following steps are for NAV-750B only)

6.15.13	400Hz Tone Frequency	497.2Hz_____	402.8Hz
6.15.15	1300Hz Tone Frequency	1290.9Hz_____	1309.1Hz
6.15.17	3000Hz Tone Frequency	2779.0Hz_____	3021.0Hz
6.15.19	3000Hz Tone Distortion	0%_____	0.7%
6.15.21	1300Hz Tone Distortion	0%_____	0.7%
6.15.23	400Hz Tone Distortion	0%_____	0.7%

6.16 VOR, 9960Hz DISTORTION AND PHASE-LOCK LOOP ADJUSTMENT (PC-2)

6.16.6	9960Hz Tone Frequency	9958.008Hz_____	9961.992Hz
6.16.11	9960Hz Tone Distortion	0%_____	1.3%

6.17 VOR, 9960 Hz TONE DEVIATION ADJUSTMENT (PC-2)

6.17.5 9960Hz FM Deviation Δt=46.1μs_____50.9μs

6.18 ILS, 90Hz and 150Hz TONE DISTORTION ADJUSTMENT (PC-5)

6.18.5 90Hz Tone Distortion 0%_____0.4%

6.18.8 150Hz Tone Distortion 0%_____0.4%

6.19 VOR, VARIABLE BEARING CONTROL ADJUSTMENT (PC-5)

6.19.4 Waveform: High level > +10.5V _____(✓)
Low level < +2.5V _____(✓)

6.19.7 Bearing increases _____(✓)

6.19.8 Bearing decreases _____(✓)

6.20 VOR, .05° BEARING SELECT ADJUSTMENT (PC-5)

6.20.5 BEARING control operates correctly _____(✓)

6.21 DC OFFSET MEASUREMENT AND ADJUSTMENT (PC-3)

6.21.6 DEMOD voltage with PC-3 removed _____Vdc

6.21.9 DEMOD voltage with PC-3 installed;
step 6 value_____(±2mVdc)

6.22 RF OUTPUT LEVEL (ATTENUATOR) ADJUSTMENT

6.22.7 RF output between 108.000MHz and 157.000MHz.
-31.5dBm_____-28.5dBm

6.22.8 RF output between 329.000MHz and 335.000MHz
-31.5dBm_____-28.5dBm

6.22.10 (NAV-750B only) RF output between 70.000MHz and 79.000MHz)
-31.5dBm_____-28.5dBm

6.23 METER RF LEVEL SCALE ADJUSTMENT (PC-3)

6.23.3 Meter needle, from 108.000MHz to 335.000MHz, remains aligned

(±1½ needle widths)_____(✓)

6.23.5 (NAV-750B only) Meter needle, from 72.000MHz to 78.000MHz remains aligned

(±1½ needle widths)_____(✓)

6.24 TONE AMPLITUDE MODULATION DEPTH AND CENTERING ADJUSTMENTS (PC-3)

VOR (30Hz Tone)

6.24.3 30Hz VAR tone modulation 28.8%_____31.2%

6.24.6 9960Hz tone modulation 28.8%_____31.2%

LOC (150Hz Tone)

6.24.10 150Hz tone modulation 19.2%_____20.8%

6.24.12 150Hz tone DEMOD voltage _____Vrms

LOC (90Hz Tone)

6.24.14 90Hz tone modulation 19.2%_____20.8%

LOC CENTERING ADJUST

6.24.15 90Hz tone DEMOD voltage _____Vrms

6.24.16 Centering signal; step 12 volts should equal step 15 volts.

NAV-750 tolerance, ±1.00mV _____mVrms
NAV-750A tolerance, ±0.27mV _____mVrms
NAV-750B tolerance, ±0.27mV _____mVrms

G/S (150Hz Tone)

6.24.20 150Hz tone modulation 38.4%_____41.6%

6.24.21 150Hz tone DEMOD voltage _____Vrms

	G/S (90Hz Tone)	
6.24.23	90Hz tone modulation	38.4%_____41.6%
	G/S CENTERING ADJUST	
6.24.24	90Hz tone DEMOD voltage	_____Vrms
6.24.25	Centering Signal; Step 21 volts should equal step 24 volts	
	NAV-750 tolerance, ±1.00mV	_____mVrms
	NAV-750A tolerance, ±0.27mV	_____mVrms
	NAV-750B tolerance, ±0.27mV	_____mVrms
	COMM (1020Hz Tone)	
6.24.30	1020Hz tone modulation	28.8%_____31.2%
6.24.33	1300Hz (Mkr Bcn) modulation	92.15%_____97.85%
6.24.34	400Hz (Mkr Bcn) modulation	92.15%_____97.85%
6.24.35	3000Hz (Mkr Bcn) modulation	92.15%_____97.85%
6.25	METER MODULATION SCALE CALIBRATIONS (PC-3)	
	0-30 METER SCALE ADJUSTMENT	
6.25.2	20% Mod. measured value	_____
6.25.3	Measured 20% value (±0.8% Mod.)	_____
	0-100 METER SCALE ADJUSTMENT	
6.25.6	40% Mod. measured value	_____
6.25.7	Measured 40% value (±1.6% Mod.)	_____
6.26	VOR BEARING ACCURACY TEST	
6.26.9	0° TO bearing error	-0.05°_____+0.05°
6.26.12	0° FROM bearing error	-0.05°_____+0.05°
6.26.16	180° TO bearing error	-0.05°_____+0.05°
6.26.19	180° FROM bearing error	-0.05°_____+0.05°

6.26.23	90° TO bearing error	-0.05° _____	+0.05°
6.26.26	90° FROM bearing error	-0.05° _____	+0.05°
6.26.30	270° TO bearing error	-0.05° _____	+0.05°
6.26.33	270° FROM bearing error	-0.05° _____	+0.05°

6.27 VOR BEARING CHECK BOARD ADJUSTMENTS (PC-1)

6.27.5	Voltage on collector of Q105	+10.8Vdc _____	+11.2Vdc
6.27.6	Voltage on X104 pin 1	+5.3Vdc _____	+5.7Vdc
6.27.22	Bearing deviation (89.5° FROM)	-0.45° _____	-0.55°
6.27.23	Bearing deivation (89.5° TO)	+0.45° _____	+0.55°
6.27.24	Bearing deviation (90.5° TO)	-0.45° _____	+0.55°
6.27.26	Meter centered (270° TO)	-0.05° _____	+0.55°
6.27.27	Bearing deviation (270.5° TO)	+0.45° _____	+0.55°
6.27.28	Bearing deviation (269.5° TO)	-0.45° _____	+0.55°

6.28 10MHz REFERENCE OSCILLATOR (CLOCK) ADJUSTMENT (PHASE-LOCK BOARD)

6.28.5	10MHz oscillator	109.9999MHz _____	110.0001MHz

6.29 STANDARD LOW/HIGH BAND OSCILLATOR ADJUSTMENT

11Vdc REGULATOR ADJUSTMENT

6.29.5	Voltage on collector of Q1301	10.9Vdc _____	11.1Vdc
6.29.9	Frequency display s/b 106.50MHz, or less	_____	MHz
6.29.13	Frequency display s/b 128.50MHz, or less	_____	MHz
6.29.17	Frequency display s/b 327.50MHz, or less	_____	MHz
6.29.19	DC Level with R1311 Max. ccw	_____	Vdc
6.29.20	DC Level with R1311 Max. cw	_____	Vdc
6.29.21	DC Level (2/3 of voltage spread)	_____	(✓)

CALIBRATION TEST DATA SHEET

OSCILLATOR OUTPUT CHECK

6.29.24 Output level at J-131 from 108.000MHz to 334.000MHz.

-3dBm_____+3dBm

6.29.31 Output level at J-133 from 108.000MHz to 334.000MHz.

-3dBm_____+3dBm

PHASE-LOCK LOOP FREQUENCY TRAPS ADJUSTMENTS

6.29.37 25kHz trap adjustment _____(✓)

6.29.39 12.5kHz trap adjustment _____(✓)

6.29.41 NULL adjustment _____(✓)

6.30 TEST AND ALIGNMENT PROCEDURE FOR 8 STEP OSCILLATOR

11Vdc REGULATOR ADJUSTMENT

6.30.5 Voltage on collector of Q1601 10.9Vdc_____11.1Vdc

6.30.6 Voltage on emitter of Q1611 4.8Vdc_____6.2Vdc

TUNE LOW LIMIT ADJUSTMENT

6.30.12 Voltage on collector of Q1610 2.65Vdc_____2.75Vdc

6.30.13 Voltage on anode of CR1602 3.05Vdc_____3.15Vdc

OSCILLATOR SWITCHING POINT ADJUSTMENT

6.30.15 Voltage at X1604 begins to switch _____(✓)

INDIVIDUAL OSCILLATOR FREQUENCY ADJUSTMENTS

6.30.19

Oscillator Adjustment	Frequency MHz		
L1605	115.2	_____	115.4
L1607	120.7	_____	120.9
L1609	126.5	_____	126.7
L1611	132.6	_____	132.8
L1619	139.0	_____	139.2
L1617	145.6	_____	145.8
L1615	152.7	_____	152.9
L1613	159.9	_____	160.1
C1661	336.9	_____	337.1

CALIBRATION TEST DATA SHEET

OSCILLATOR LOW RANGE CHECK

6.30.21 Voltage on collector of Q1610 2.65Vdc_____2.75Vdc

6.30.22

Oscillator	Low Freq. MHz	
1.	.103.0	106.0
2.	.108.3	111.3
3.	.113.8	116.8
4.	.119.6	122.6
5.	.125.7	128.7
6.	.132.1	135.1
7.	.138.7	141.7
8.	.145.8	148.8
9.	.320.0	327.2

OSCILLATOR OUTPUT CHECK

6.30.28 Output at J-131 at 337.000MHz. -3dBm_____+3dBm

6.30.30 Output at J-131 at 115.300MHz. -3dBm_____+3dBm

6.30.37 Output at J-133 at 115.300MHz. -3dBm_____+3dBm

6.30.39 Output at J-133 at 337.000MHz. -3dBm_____+3dBm

INTEGRATOR CENTERING ADJUSTMENT

6.30.43 Phase-lock tune line. _____Vdc

6.30.44 Phase-lock tune line. _____Vdc

6.30.45 Voltage spread between steps 43 & 44 should be at least 3 volts. _____(✓)

6.30.50 25kHz trap adjustment _____(✓)

6.30.52 12.5kHz trap adjustment _____(✓)

6.30.54 NULL adjustment _____(✓)

6.31 TEST AND ALIGNMENT PROCEDURE FOR NAV-750 A/B OSCILLATOR

11Vdc CHECK

6.31.5 Voltage on emitter of Q3. 10Vdc_____13Vdc

CALIBRATION TEST DATA SHEET

G/S OSCILLATOR FREQUENCY ADJUSTMENT

6.31.7 Frequency display 340.000MHz_____341.000MHz

6.31.8 108.000 thru 129.975MHz, display & Ø Lock _____(✓)
130.000 thru 157.950MHz, display & Ø Lock _____(✓)
329.000 thru 335.000MHz, display & Ø Lock _____(✓)

For NAV-750B:

70.000 thru 79.000 MHz, display & Ø Lock _____(✓)

OSCILLATOR OUTPUT CHECK

6.31.10 Output at J-131 from 108.000 thru 335.000MHz.

-6dBm to +10dBm_____(✓)

For NAV-750B:

6.31.11 Output at J-131 from 70.000 thru 79.000MHz.

-6dBm to +10dBm_____(✓)

6.31.18 Output at J-133 from 108.000 thru 335.000MHz.

-6dBm to +10dBm_____(✓)

FOR NAV-750B:

6.31.19 Output at J-133 from 70.000 thru 79.000MHz.

-6dBm to +10dBm_____(✓)

TUNING INTEGRATOR INPUT OFFSET ADJUSTMENT

6.31.25 Phase-lock tune line _____Vdc

6.31.26 Phase-lock tune line _____Vdc

6.31.27 Mean voltage _____Vdc

6.31.28 Mean voltage (±20% $V_1 - V_2$) _____Vdc

PHASE-LOCK LOOP FREQUENCY ADJUSTMENTS

6.31.34 12.5kHz trap adjustment _____(✓)

6.31.36 25kHz trap adjustment _____(✓)

6.32	MODULATOR AMPLIFIER CHECK AND ADJUSTMENT		
	LOW BAND RF LEVEL ADJUSTMENT		
6.32.10	Voltage at TP3	5.0Vdc_____	5.6Vdc
6.32.11	Detector dc level (step 10)	±0.075Vdc_____	(✓)
6.32.12	RF level at J-121	-0.2dBm_____	+0.2dBm
6.32.13	RF level at J-121	-1.0dBm_____	+1.0dBm
	G/S RF LEVEL AND TUNING ADJUSTMENT		
6.32.16	Negative clipping after 95% Mod.	_____	(✓)
6.32.25	RF level at J-121	-0.2dBm_____	+0.2dBm
6.32.26	RF level at J-121	-1.0dBm_____	+1.0dBm
6.32.29	Modulation capability	_____	(✓)
6.33	MODULATOR AMPLIFIER CHECK AND ADJUSTMENT		
	PIN MODULATOR DRIVE ADJUSTMENT		
6.33.3	Voltage at X3 pin 6.	+0.9Vdc_____	+1.1Vdc
6.33.8	Output level at J-121	-1dBm_____	+1dBm
	RF OUTPUT ADJUSTMENT		
6.33.10	Output level at 108.000MHz	-0.8dBm_____	+0.2dBm
6.33.12	Output level at 337.000MHz	-0.8dBm_____	+0.2dBm
	MODULATOR DYNAMIC RANGE ADJUSTMENT		
6.33.16	Mod. meter indication	93%_____	
6.33.19	Modulation capability	_____	(✓)
6.34	PERFORMANCE CHECK OF SINGLE AND DOUBLE BUFFER ASSEMBLIES		
6.34.3	Single buffer	-31dBm_____	-20dBm
	Double buffer	-31dBm_____	-20dBm

CALIBRATION TEST DATA SHEET

6.35 PERFORMANCE CHECK OF SINGLE AND DOUBLE BUFFER ASSEMBLIES

6.35.3	Single buffer	-33dBm_____	-24dBm
	Double buffer	-33dBm_____	-20dBm

SECTION VII

Semiconductor and IC Guide

7.1 Introduction. The NAV-750 Test Set utilizes a wide range of semiconductors and IC devices to accomplish it's purpose. Although all solid-state components have been in general use for many years, it is still manufacturer's experience that improperly repaired printed circuit boards and use of test devices not suited to transistors cause far too many failures that can be easily avoided. The intent of this section is to familiarize the technician with approved repair methods.

7.1.1 This section is divided into two general areas - the repair of solid-state equipment in a manner that will prolong the equipment life, and a familiarization with the various IC's used and how to determine their proper operation.

7.2 Semiconductor Test Equipment. Damage to semiconductors by test equipment is usually the result of accidentally applying too much current or voltage to the elements. Common causes of damage from test equipment are discussed in the following paragraph.

7.2.1 Test equipment with transformerless power supplies is one source of high current. However, this type of test equipment can be used by employing an isolation transformer in the AC power line.

7.2.2 It is still possible to damage semiconductors from line current, even though the test equipment has a power transformer in the power supply and the test equipment is provided with a line filter. This filter may function as a voltage divider and apply half voltage to the semiconductor. To eliminate this condition, connect a ground wire from the chassis of the test equipment to the chassis of the equipment under test before making any other connections.

7.2.3 Another cause of semiconductor damage is a multmeter that requires excessive current to provide adequate indications. Multimeters with sensitivities of less than 20,000-ohms-per-volt should not be used on semiconductors, except to forward biased diodes. A multimeter with low sensitivity will draw too much current through many types of small semiconductors causing damage. When in doubt as to the amount of current supplied by a multimeter, check the multimeter circuits on all scales with an external, low-resistance multimeter connected in series with the multimeter leads. If more than one millampere is drawn on any range, this range connot be safely used on small semiconductors.

7.2.4 Power Supply. When using a battery-type power supply, always use fresh batteries of the proper value. Make certain that the polarity of the power supply is correct for the equipment under test. Do not use power supplies having poor voltage regulation.

7.2.5 Due to the wide utilization of semiconductors in this electronic equipment, somewhat different techniques are necessary in maintenance procedures. In solid-state circuits the impedances and resistances encountered are of much lower values than those encountered in vacuum-tube cirucits. Therefore, a few ohms discrepancy can greatly affect the performance of the equipment. Also, coupling and filter capacitors are of larger values and usually are of the tantalum type. Hence, when measuring values of capacitors, an instrument accurate in the high ranges must be employed. Capacitor polarity must be observed when measuring resistance. Usually more accurate measurements can be obtained if the semiconductors are removed or disconnected from the circuit.

7.3 Replacing Semiconductors.

7.3.1 Transistors. Remove or replace a transistor with the supply voltage turned OFF. Transients produced with power on may damage the transistor or other components remaining in the circuit. If a transistor is to be evaluated in an external test circuit, be sure that no more voltage is applied to it than normally is used in the circuit from which it came.

(a) Use only a low heat soldering iron when installing or removing soldered in parts.

(b) When installing or removing a soldered in semiconductor grasp the lead to which heat is applied between the solder joint and the semiconductor with long nose pliers. This will dissipate some of the heat that would otherwise conduct into the semiconductor from the soldering iron. Make certain that all wires soldered to semiconductor terminals have first been properly tinned so that the necessary connections can be made quickly. Excessive heat will permanently damage a semiconductor.

(c) In some cases, power transistors are mounted on heatsinks that are designed to dissipate heat away from them. In some power circuits, the transistor must also be insulated from ground. Often, this insulating is accomplished by means of insulating washers made of mica. When replacing transistors mounted in this manner, be sure that the insulating washers are replaced in proper order. After the transistor is mounted, and before making any connections check from the case of the transistor to ground with a multimeter to see that the insulation is effective.

7.3.2 Integrated Circuits. If an IC is known to be defective, the best way to remove it is to cut off each of its pins, remove the case, and then unsolder the remaining pins from the integrated circuit card one by one. This is preferable over removing the IC intact because attempts to remove the IC intact may result in damage to the card. Note the marking identication of the IC before removal, and replace the new one with the same orientation as the one removed.

7.4 Following is a list of the IC's, their circuit functions, and board locations.

SN7400 (Quad 2-input NAND gate)	Tone Summation Board Bearing Logic Board Localizer/Bearing Control Frequency Control Phase Lock Circuit Digital Readout
SN7402 (Quad 2-input NOR gate)	Localizer/Bearing Control Frequency Control Phase Lock Control
SN7404 (Hex Inverter)	Localizer/Bearing Control Bearing Logic Board Frequency Control Remote Channeling Phase Lock Circuit
SN7405 (Hex Inverter with open Collector output)	Frequency Control
SN7409 (Quad 2-input and Gate with open Collector output)	Phase Lock Circuit
SN7410 (Triple 3-input NAND gate)	Tone Summation Board Bearing Logic Board
SN7420 (Dual 4-input NAND gate)	30Hz Sine Board Bearing Logic Board Localizer/Bearing Control Frequency Control Remote Channeling

SN7430 (Single 8-input NAND gate)	Bearing Logic Board Localizer/Bearing Control Frequency Control Phase Lock Circuit
SN7442 (BCD-to decimal decoder)	Frequency Control Remote Channeling
SN7473 (Dual J-K Flip-flop)	Frequency Control Phase Lock Circuit Bearing Logic
SN7475 (Quadruple Bistable latch)	Digital Readout
SN7476 (Dual J-K Master-slave flip-flop with preset and clear)	Frequency Control
SN7490 (Divide by 2, 5, or 10)	Frequency Control Phase Lock Circuit Digital Readout
SN7492 (Divide by 12, 2 and 6)	Bearing Logic
SN7493 (4-bit Binary Counter)	30 Hz Sine Board
SN74121N (Monstable Multi-vibrator)	Frequency Control Phase Lock Circuit
SN74123 (Dual Retriggerable Monostable MV)	Localizer/Bearing Control Bearing Logic Board
SN74190 (Sychronous Up/Down Decade Counters)	Frequency Control Bearing Logic

SN74191 (Sychronous Up/Down 4-bit Binary Counter)	Bearing Logic Frequency Control Phase Lock Circuit
NS5220	Frequency Select
SN72558P, 5558, LM1458 (Dual-Operational Amplifier	Tone Summation Board Modulation Amplifier Localizer/Bearing Control Bearing Check
DM8200 (4-bit Comparator)	Bearing Logic Board
9322 (Quad 2-input multiplexer)	Frequency Control
SN72741L (Single Compensated Op Amp)	Bearing Check Board 30 Hz Sine Board Tone Summation Oscillator Modulator Amplifier Phase Lock Circuit Localizer/Bearing Control
74S00 (Quadruple 2-input pos NAND Gate)	Digital Readout
74S112 (Dual J-K Edge triggered Flip-flop)	Digital Readout
DD-700	Digital Readout
MC1027L (100 MHz Flip-flop)	Phase Lock Circuit
MC1666L (300 MHz dual clock R-S Flip-flop)	Phase Lock Circuit
MC1692L (300 MHz Quad Line Receiver)	Phase Lock Circuit

MC1709CG	Bearing Check Tone Summation
(High performance operative amp)	Modulator Amplifier Localizer Bearing Control
LM309K	Power Supply
(5V Voltage Regulator)	
LM320K-LM340K +12V	Power Supply
(12V voltage Regulator)	
LM340K + 24V	Power Supply
(24V Voltage Regulator)	

7.5 General Operation of Digital IC's. All digital "elements" (gate, counters, comparators, etc.), operates on a two level basis. One level is termed "logic zero" or LO and is any voltage less than 0.8V. (Normally logic zero is 0.2V). The other level is termed "logic one" or HI and is any voltage greater than 2.0V. (Normally logic one is +3.2V). In positive logic circuits the Logic One is always the more positive voltage level. Negative logic - not used in the NAV-750 - has Logic One the more negative voltage level.

7.6 IC Descriptions:

7.6.1 SN7400 and SN7402. These two "quad" gate packs are complementary and thus are very versatile in design. The SN7400 is normally shown as which indicates it requires two logic one state at the input to cause a logic zero state to occur at the output. The small (zero) shown at the output tells the output state when the input state is satisfied - in this case two logic one levels (no zeros are indicated). Notice that if either input level goes down to a logic zero the output must go up to a logic one. The SN7400 may be used as a NOR gate in this way as is shown Read the symbol as "OR function" requiring a logic zero on either input to cause a one level to appear at the output.

Thus the SN7400 is both:

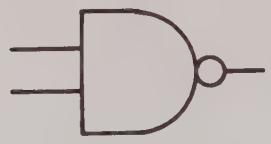

OR

7.6.2 The SN7402 is the compliment of the SN7400 and thus is normally shown as . Read this symbol to say "it requires a logic one on either input to cause a logic zero output state". This implies that both inputs are used in the zero state and raised to one state during operation. This also means that the output will be up - logic one - only if both inputs are logic zeros. Therefore this gate can also be used as a NAND gate requiring two zeros at the input to cause a one at the output. It is drawn as

The SN7402 is both: OR

7.6.3 SN7404 is a hex inverter. It has six inverter stages, each independent from the other.

7.6.4 The SN7405 is similiar to the SN7404 except it has an open collector output on each stage, this allows the outputs to be tied together for certain applications which the SN7404 can not have done.

7.6.5 The SN7409 is a quadruple 2 input Pos AND gate. Similiar to the SN7400 except it does not invert at the output. Each output has an open collector stage like the SN7405.

7.6.6 In formal logic schematics (and hopefully in informal work also) the symbol is used which describes the element's function in the circuit. The SN7410 and SN7420 are three and four input versions, respectively, of the SN7400. They may also be used as:

SN7410

SN7420

7.6.7 SN7430 Single 8-input NAND gate. The 7430 is an 8-input NAND gate which operates similiar to the SN7400. All 8 inputs must be high for the output to go low. If any input is low the output will go high.

7.6.8 SN7443 BCD to Decimal Decoder. The 7442 accept 1,2,4,8 BCD data at the inputs and for the corresponding BCD number 0-9 causes one of ten outputs to go low. Therefore four lines of BCD data are decoded into ten lines of data.

7.6.9 The SN7473 J-K Flip-Flop. This logic element is the basic storage and control element of the NAV-750 logic. It uses one "clock" input which controls the device in conjunction with two other inputs called "J" and "K" inputs. The clock pulse required is a transition from a "one" to a "zero" state. If "J" is up (logic one) a clock pulse will "set" the flip-flop and cause "Q" output to go to a logic "one" and "$\overline{Q}$" output to go to a logic "zero". (This is the definition of "set"). If K is up the clock pulse will "reset" the flip-flop and cause Q to go down and "$\overline{Q}$" to go up. If both J and K are up the input clock frequency will be divided by two. If only one input is up (J or K) the first clock pulse will either set or rest the device and succeeding clock pulses will have no effect. A direct reset input is provided which when raised to the logic one level will force the SN7473 to reset. As long as the direct reset line is up all clock pulses have no effect - the device will stay reset.

7.6.10 SN7475. The 7475 is a quad latch. It consists of four identical but independent stages. Data present at the inputs is transferred to the outputs as long as the clock input is high. When the clock input goes low the data that was present at the input at that instant will be stored at the data output.

7.6.11 SN7476. Similiar to 7473 in operation refer to 7.6.9 except the 7476 also has a preset input. If the preset input is brought low the flip-flop will be forced to a set condition with "Q" output high. The clear input operate similiarly. All other functions are the same as the 7473.

7.6.12 The SN7490 Divider. The SN7490 is an element capable of dividing by 2, 5, or 10 in binary format. It requires downward clock transitions to change states and count. Therefore a small logic zero is shown at each clock input. The device uses one flip-flop at the input independent of all others and is used as a divide-by-2 function. Three other flip-flops are internally connected to divide-by-5. When externally connected in series a divide-by-10 function is formed. A logic one on any output indicates that output is to be added to the sum stored at that instant in the SN7490.

7.6.12.1 The SN7490 may be reset to either a "zero" count or "nine" count by the application of two logic "one" levels to either the R0 or R9 inputs. Both R0 or R9 inputs must be up (added) to achieve reset. Also, while either R0 or R9 inputs are up all input clock pulses are thrown away and have no effect.

7.6.13 SN7429 Divider. The SN7492 is an element capable of dividing by 2, 6, or 12 in binary format. It requires downward clock transitions to change states and count. The device uses one flip-flop at the input independent of all others as is a ÷ 2 counter. Three flip-flops are internally connected to divide-by-6. Externally connected in series ÷ 12 function is formed. A logic "one" on any output indicates that output value is to be added to the sum stored at that instant in the SN7492. The SN7492 may be reset to a "zero" count by applying two logic "one" levels to the RO input. While both RO inputs are up all input clock pulses are ignored and all outputs will be in logic "zero" state.

7.6.14 SN7493 4-Bit Binary Counter. The 7493 is a divide by 2, 8, or 16 counter. It is similiar in operation to the 7490 except it is a binary counter. It has a common reset to "zero" for all four stages.

7.6.15 SN7412 Monostable Multivibrator. The SN74121N is a one-shot element with gated inputs. External R and C values must be added to form pulse widths from 40ns to 40 sec. Three inputs provide selective gating. If B is held at a logic "one" state, a logic "zero" on either A1 or A2 will trigger an output pulse; or if either A1 or A2 is held low an upclock on B will trigger a pulse. The device is used in the NAV-750 to widen an extremely narrow reset pulse to useable proportions.

7.6.16 SN74123. Dual One-Shot operates the same as the 74121 except there are two in one package.

7.6.17 SN74190 Synchronous Up/Down Decade Counter. One line controls whether the device counts up or counts down. All output stages change state at the same time. Typical clock frequencies are in excess of 20 MHz.

7.6.18 SN4191 Synchronous Up/Down Four Bit Binary Counter. The SN74191 is the same as the SN74190 except it is a binary counter.

7.6.19 NS5220 Special Program ROM (Read Only Memory). It takes BCD data in from the Frequency Select circuit which is true BCD data and it changes it according to a prescribed program into data which is directly related to the frequency sequence needed to control the generator output frequency. To verify ROM operation, check the input to ROM to agree BCD wise directly to the frequency that is selected. This verifies circuitry between frequency select switches or memory and the ROM. To check output, once the input is verified to be correct, verify that the frequency present at the plug at the back of PC-7, or the generator output frequency, is that selected.

7.6.20 72558P, 5558, or LM1458. These dual operational amplifiers contain two operational amplifiers with each electrically similiar to the SN72741. All internal frequency compensation keeps external components to a minimum. They are used wherever a general purpose amplifier is required. These three are interchangeable in operation.

7.6.21 DM8200 Four Bit Comparator. The DM8200 is a comparator that samples two four bit binary inputs, compares their numerical values, and gives outputs telling whether one input is greater than, equal to or lesser than the other. In the NAV-750, only the equality function is used. Whenever the input or A1 = B1, A2 = B2, A3 = B3 and A4 = B4, both outputs will go to a logic one state. Otherwise one output or the other will be down at logic zero.

7.6.22 9322 Quad Two-Input Multiplexer. The 9322 is basically a four pole, double throw (4PDT) switch. Data is selected from one of two inputs on each switch and routed to a common output. An Enable input must be low for operation. If Enable is high all outputs are at logic "zero" regardless of inputs. In the NAV-750 the Enable is wired to ground. If the Select input is high true data from all the "one" (1a, 1b, 1c, and 1d) inputs will be present at the Z outputs (Za, Zb, Zc, and Zd). If Select is low true data from all the "zero" inputs (0a, 0b, 0c, and 0d) will be present at the Z outputs. It is TTL type logic and requires 5V for operation.

7.6.23 SN7241L and LM709 Single Compensated Op Amp. The SN72741 is a single operational amplifier with internal frequency compensation. It is used when a high performance op amp is required.

7.6.24 74S00 Schottky Quadruple Two Input Pos NAND Gate. Identical to SN7400 discribed in 10-19 except it is capable of speeds of 80 MHz where as the SN7400 is capable of 20 MHz maximum.

7.6.25 74S112 Schottky Dual J-K Edge Triggered Flip-Flop. Like the 74S00 in 7.6.24, the 74S112 is capable of speeds of 80 MHz.

7.6.26 The DD-700 BCD to 7-Bar HV Display Decoder. The DD-700 is designed to operate high voltage gas-discharge readouts such as the Sperry used in the NAV-750. It can safely handle output voltage as high as 180-200 volts. The DD-700 requires a 5V power supply for it's own operation. It's current regulates the output to maintain even display brightness.

7.6.27 MC1027L 100 MHz Flip-Flop. The MC1027 is a single, high speed flip-flop designed to operate at frequencies of 100 MHz minimum. In the NAV-750 it is used in the Phase Lock circuit. The device was designed to run from a negative voltage, therefore VCC is tied to ground and operates near A+, a logic one being 3.2V. Level shifters are incorporated at the output of the dividers to translate the 1027 logic levels to the TTL logic levels (0.8V and 2.0). Multiple "ORED" J and K inputs are provided, of which J and K inputs are tied together to form a single clock input and other inputs are used as needed to form a divide-by-five function. All unused inputs are tied to ground.

7.6.28 MC1666L Greater than 300 MHz Dual Clock R-S Flip-Flop. The MC1666L is a dual, high-speed flip-flop with speeds up to 400 MHz. In the NAV-750 the first flip-flop is required to toggle up to 330 MHz, the second to 165 MHz. The flip-flop is a set-reset type which requires a clock input to enable the set-reset input and change output states.

7.6.29 MC1692 400 MHz Quad Line Receiver. The MC1692 is a quad, two input gate pac utilized as a driver for high-speed counting in excess of 400 MHz. As applied in the NAV-750 max response necessary is 330 MHz.

7.6.30 MC1709CG High Performance Operational Amp. The MC1709CG is a higher speed high performance operational amp. It requires external frequency compensation otherwise operates similiar to the SN72741L.

7.6.31 LM309K, LM340K-12, and LM340K-24 Voltage Regulators. These are one piece integrated positive voltage regulators, complete in themselves. They require no external components except for transformers, rectifiers and filter capacitors. Each regulator is set for specific voltage depending on part number.

7.7 Operational Checking of IC's. The usual method of verifying that an IC of any function is working properly is to observe it in action in the circuit. If the IC is of TTL (Transistor-transistor logic), which most all the IC's are in the NAV-750, the input levels must go below 0.4V and above 2.4 for well defined logic "zero" and "one" levels. Output levels usually will go from 0.2 or 0.3V to 3.2V. Gate packs must perform per their logic functions which can be verified with an oscilloscope. Counter IC's should divide the input clock frequency by 2,4,8, and 10 observing the 2^0 (1 or A), 2^1 (2 or B), 2^2 (4 or C) and 2^3 (8 or D) outputs.

7.7.1 IC's of any type are designed to sense changing voltage levels at their inputs. This causes them to be particularly sensitive to both power buss variations and noise picked up in various ways on the toggle or clock lines. When IC failure is suspected always observe the A+ leads near the IC's. Be aware of transients from external sources great enough in amplitude to fall below 1.5V. Sometimes a faulty IC will introduce transients onto clock lines to other IC's making them appear faulty also.

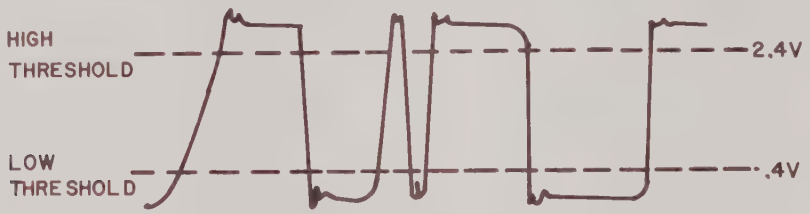

Figure 7-1

7.7.2 TTL Signal. (See Figure 7-1 above). The relative values of signal voltage with respect to the threshold voltages determine the operation of the circuit. A signal above the high threshold is in the high state and whether it is 2.8V or 3.0V is unimportant to the operation of the circuit.

7.7.3 Figure 7-1 shows a typical TTL (Transistor-Transistor-Logic) signal. This might as well be any analog signal when viewed on an oscilloscope. The oscilloscope displays absolute voltage with respect to time, but in the digital world absolute values are unimportant. A digital signal exists in one of two or three states--high, low, and undefined or in-between level--each determined by a threshold voltage. It is the relative value of the signal voltage with respect to these thresholds that determines the state of the digital signal and this digital state determines the operation of the IC, not absolute levels. In Figure 7-1 if the signal is greater than 2.4 volts, it is a high state and it is unimportant whether the level is 2.8 or 3.0 volts. Similarly, for a low state the voltage must be below .4 volts. It is not important what the absolute level is as long as it is below this threshold. Thus when using an oscilloscope, the troubleshooter must over and over again determine if the signal meets the threshold requirements for the desired digital state.

7.7.4 Within a digital logic family, such as TTL, the timing characteristics of each component are well defined. Each gate in the TTL logic family displays a characteristic propagation delay time, rise time, and fall time. The effects of these timing parameters on circuit operation are taken into account by the designer. Once a design has been developed beyond breadboard or prototype stage and is into production, problems due to design have hopefully been corrected. An important characteristic of digital IC's is that when they fail, they fail catastrophically. This means that timing parameters rarely degrade or become marginal. Thus observing on an oscilloscope and making repeated decisions on the validity of timing parameters is time consuming. Once problems due to design are corrected, the fact that pulse activity exists is usually enough indication of proper IC operation without further observation of pulse width, repetition rate, rise time or fall time.

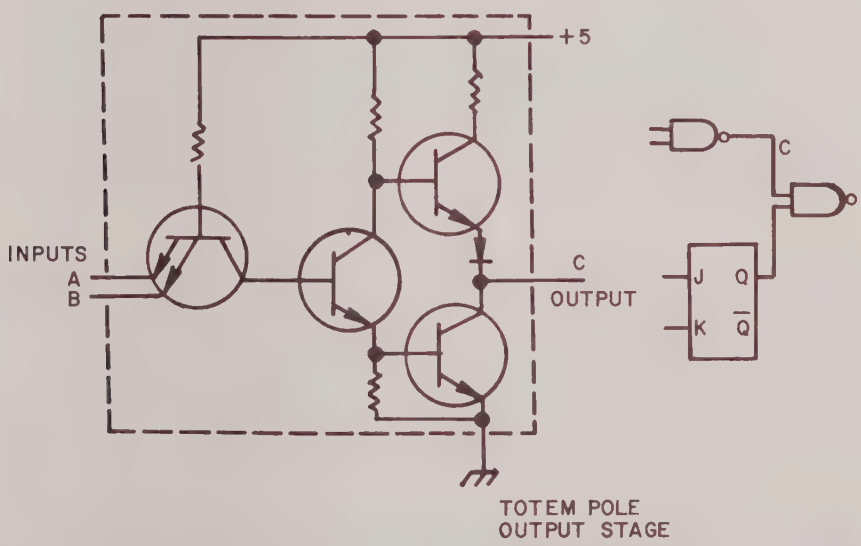

Figure 7-2

7.7.5 When stimulating a node in circuit, such as C in Figure 7-2, it is necessary to override the low impedance totem pole output stage driving that node. When the output is in the low state, it is a saturated transistor to ground. Presently used signal sources are not powerful enough to override this low state.

7.7.6 Figure 7-2 shows a problem created by the TTL logic family. The output stage of a TTL device is a transistor totem pole. In either the high or low state, it is a low impedance. In the low state is is a saturated transistor to ground. It thus appears as 5--10 ohms to ground. This presents a problem to in-circuit stimulation. A signal source used to inject a pulse at a node which is driven by a TTL output must have sufficient power to override the low impedance output.

7.8 In order to troubleshoot efficiently, it is important to understand the type of failures found in digital circuits. These can be categorized into two main classes--those caused by a failure internal to an IC and those caused by a failure in the circuit external to the IC.

7.8.1 There are four types of failures that can occur internally to an IC. These are (1) an open bond on either an input or output, (2) a short between an input or output and Vcc or ground, (3) a short between two pins (neither of which are Vcc or ground), and (4) a failure in the internal circuitry (often called the steering circuitry) of the IC.

7.8.2 In addition to these four failures internal to an IC, there are four failures that can occur in the circuit external to the IC. These are (1) a short between a node and Vcc or ground, (2) a short between two nodes (neither of which are Vcc or ground), (3) an open signal path, and (4) a failure of an analog component.

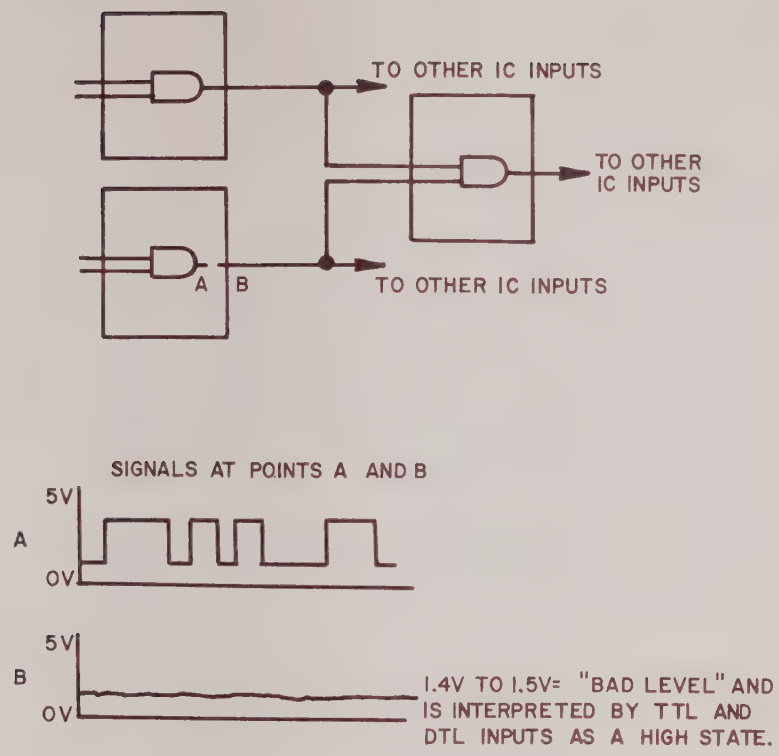

Figure 7-3

7.9 The effect of an open output bond upon circuit operation is shown in Figure 7-3. An open output bond allows all inputs driven by that output to float to a "bad level". This level is usually interpreted as a logic high state by the inputs. Thus the inputs driven by an open output bond will respond as though a static logic high signal was applied.

7.9.1 Before discussing how to detect each of these failures we will discuss the effect each has upon circuit operation. The first failure internal to the IC menitioned was an open bond on either an input or output. This failure has a different effect depending upon whether it is an open output bond or an open input bond. In the case of an open output bond (Figure 7-3), the inputs driven by that output are left to float. In TTL and DTL circuits a floating input rises to approximately 1.4 to 1.5 volts and usually has the same effect on circuit operation as a high logic level. Thus an open output bond will cause all inputs driven by that output to float to a bad level since 1.5 volts is less than the high threshold level of 2.0

volts and greater than the low threshold level of .4 volts. In TTL and DTL, a floating input is interpreted as a high level. Thus the effect will be that these inputs will respond to this bad level as though it were a static high signals.

7.9.2 In the case of an open input bond (Figure 7-4), we find that the open circuit blocks the signals driving the input from entering the IC chip. The input on the chip is thus allowed to float and will respond as though it were a static high signal. It is important to realize that since the open occurs on the input inside the IC, the digital signal driving this input will be unaffected by the open and will be detectable when looing at the input pin (such as a Point A in Figure 7-4). The effect will be to block this signal inside the IC and the resulting IC operation will be as though the input were a static high.

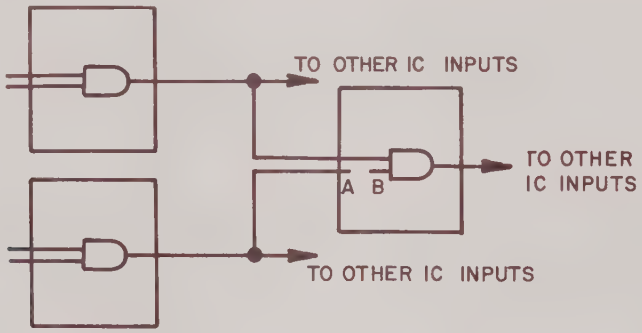

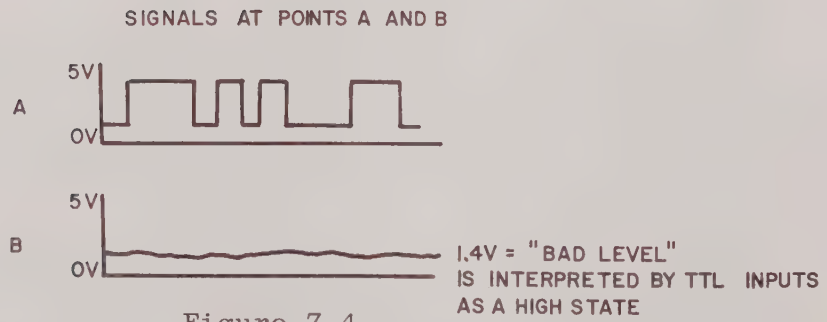

Figure 7-4

7.9.3 The effect of an open input bond upon circuit operation is shown in Figure 7-4. An open bond on an input has the effect of blocking the input signal from reaching the chip and allows the input of the chip to float to a "bad level". Thus even though the signal can be viewed at an external point such as Point A, the input of the chip responds to the "bad level" as though it were a static high level.

7.9.4 A short between an input or output and Vcc or ground has the effect of holding all signal lines connected to that input or output either high (in the case of a short Vcc) or low (if shorted to ground) (Figure 7-5). In many cases, this will cause expected signal activity at points beyond the short to disappear and thus this type of failure is catastrophic in terms of circuit operation.

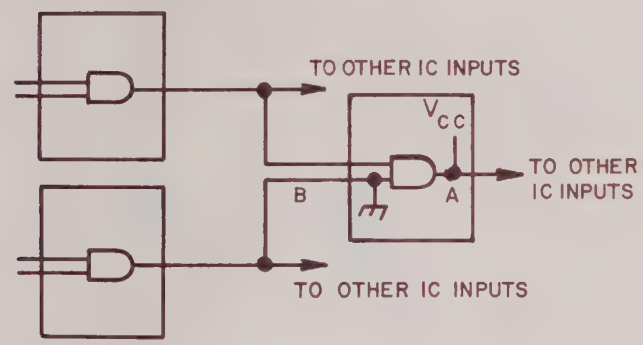

Figure 7-5

7.9.5 A short between an input to Gnd and output to Vcc is shown in Figure 7-5. All signal lines connected to Point B are held in the low state.

7.9.6 A short between two pins is not as straightforward to analyze as the short to Vcc or ground. When two pins are shorted the outputs driving those pins oppose each other when one attempts to pull the pins high while the other attempts to pull them low (Figure 7-8). In this situation the output attempting to go high will supply current through the upper saturated transistor of its totem pole output stage while the output attempting to go low will sink this current through the saturated lower transistor of its totem pole output stage. The net affect is that the short will be pulled to a low state by the saturated transistor to ground. Whenever both outputs attempt to go high simultaneously or to go low simultaneously, the shorted pins will respond properly. But whenever one output attempts to go low the short will be constrained to be low.

7.9.7 The fourth failure internal to an IC is a failure of the internal (steering circuitry of the IC (Figure 7-6). This has the effect of permanently turning on either the upper transistor of the output totem pole thus locking the output in the high state or turning on the lower transistor on the totem pole thus locking the output in the low state. Thus this failure blocks the signal flow and has a catastrophic effect upon circuit operation.

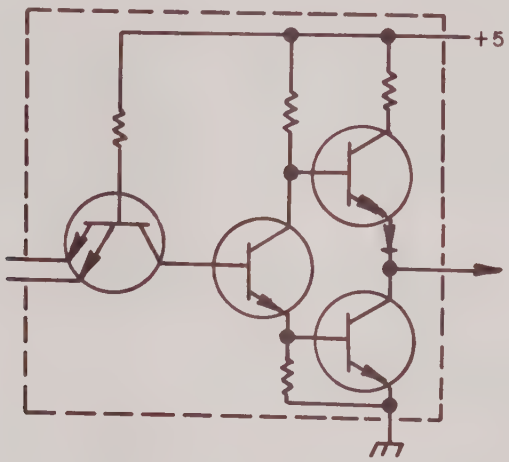

Figure 7-6

7.9.8 The internal steering circuitry of an Integrated Circuit is shown in Figure 7-6. A failure of the steering circuitry of an IC will either cause the output to be in a static high state or a static low state.

7.9.9 A short between a node and Vcc or ground external to the IC is indistinguishable from a short internal to the IC. Both will cause the signal lines connected to the node to be either always high (for shorts to Vcc) or always low (for shorts to ground). When this type of failure is encountered only a very close physical examination of the circuit will reveal if the failure is external to the IC.

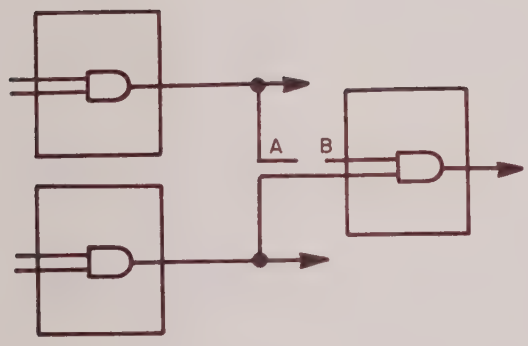

Figure 7-7

7.9.10 An open in the external circuit to an IC is illustrated in Figure 7-7. All inputs attached to the node at Point A will be driven properly. All inputs to the right of the open (Point B) will be left to float to a "bad level" and will therefore look like a static high state.

7.9.11 An open signal path in the circuit has a similar effect as an open output bond driving the node (Figure 7-7). All inputs to the right of the open will be allowed to float to a bad level and will thus appear as a static high level in circuit operation. Those inputs to the left of the open will be unaffected by the open and will thus respond as expected.

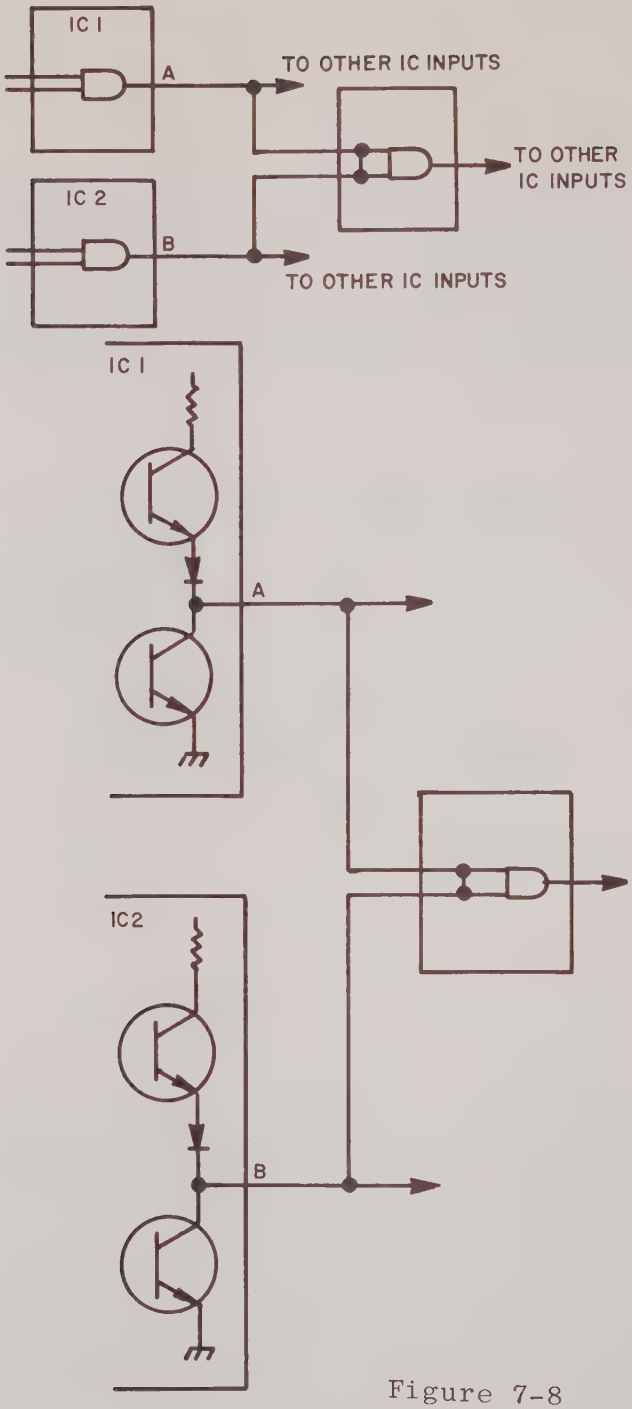

Figure 7-8

7.9.12 The error effect of a short between two pins (Figure 7-8) occurs when the outputs driving those pins attempt to pull the short to opposite states. In this case, the output attempting to pull the node high will be supplying current while the output attempting to pull the node low is a saturated transistor to ground and will be sinking the current. The saturated transistor to ground will thus pull the node to a low state.

R E F E R E N C E S

I. Hewlett-Packard, Application Note 163-1, "Techniques of Digital Troubleshootin".

II. King Radio Corporation, KWX-40 Weather Radar, Maintenance/Overhaul Manual, Section VI.

TABLE OF CONTENTS

SCHEMATICS

SECTION VIII PARTS LAYOUT, THEORY OF OPERATION, AND SCHEMATICS

Figure		Page
8-1	Interconnect Diagram (Dwg. 4-16-0141), NAV-750	8-1
8-2	Interconnect Diagram (Dwg. 4-16-0374), NAV-750A.	8-2
8-3	Interconnect Diagram (Dwg. 4-16-0327), NAV-750B.	8-3
8-4	LOC DDM Switch Wiring (Dwg. 1-16-0126),. NAV-750/A/B.	8-5
8-5	G/S DDM Switch Wiring (Dwg. 1-16-0127),. NAV-750/A/B.	8-6
8-6	Rear Panel, Power Supply (Dwg. 3-16-0238), NAV-750/A/B.	8-7
8-7-1	Power Supply Schematic (Dwg. 3-16-0142A),. NAV-750/A S/N 101-270.	8-8
8-7-2	Power Supply Schematic (Dwg. 3-16-0142B),. NAV-750/A S/N 271-370.	8-9
8-7-3	Power Supply Schematic (Dwg. 3-16-0142), NAV-750/A/B S/N 371 & on.	8-10
8-8-1	170 Vdc Power Supply Parts Layout. (Dwg. 2-00-0260), NAV-750/A/B	8-11
8-8-2	170 Vdc Power Supply Schematic (Dwg. 1-16-0224) NAV-750/A/B.	8-12
8-9-1	Bearing Check Board Parts Layout,. NAV-750/A/B	8-13
8-9-2	Bearing Corrector Board Parts Layout	8-14
Bearing Check Board Theory of Operation NAV-750/A/B, (Ref. Dwg. 3-16-0021).		8-15
Bearing Corrector Circuit Theory of Operation NAV-750/A/B, (Ref. Dwg. 3-16-0370)		8-19

TABLE OF CONTENTS

Figure		Page
8-10-1	Bearing Check Board Schematic (Dwg. 3-16-0021),. . NAV-750/A/B.	8-23
8-10-2	Bearing Corrector Circuit Schematic. . . . . (Dwg. 3-16-0370), NAV-750/A/B	8-24
8-11	30 Hz Sine Board Parts Layout, NAV-750/A/B	8-25
30 Hz Sine Board Theory of Operation. . . . . NAV-750B, (Ref. Dwg. 4-16-0290).		8-27
8-12	30 Hz Sine Board Schematic (Dwg. 4-16-0290). . . . NAV-750B.	8-31
8-13	Tone Summation Board Parts Layout, ... (Dwg. 3-16-0020), NAV-750/A.	8-32
8-14	Tone Summation Board Parts Layout, ... NAV-750B.	8-33
Tone Summation Board Theory of Operation. . . . . NAV-750B, (Ref. Dwg. 4-16-0298).		8-35
8-15	Tone Summation Board Schematic (Dwg. 3-16-0020), . NAV-750/A,	8-39
8-16	Tone Summation Board Schematic (Dwg. 4-16-0298), . NAV-750B.	8-40
8-17	Localizer/Bearing Control Board Parts Layout,. . . NAV-750/A/B.	8-41
8-18	Bearing Logic Board Parts Layout	8-42
Localizer/Bearing Control Board Theory of Operation,. . . . . NAV-750/A/B, (Ref. Dwg. 4-16-0024-25).		8-43
Bearing Logic Board Theory of Operation NAV-750/A/B,. . . . . (Ref. Dwg. 4-16-0024-25)		8-47
8-19	Localizer/Brg. Control/Brg. Logic Schematics . . . (Dwg. 4-16-0024-25), NAV-750/A/B.	8-53
8-20	Frequency Control Board Parts Layout . . . . . NAV-750/A/B.	8-54
Frequency Control Board Theory of Operation NAV-750B, ... (Ref. Dwg. 4-16-0326).		8-55

TABLE OF CONTENTS

Figure		Page
8-21	Frequency Control Board Schematic. . . . . (Dwg. 4-16-0326), NAV-750B.	8-59
8-22	Remote Channeling Board Parts Layout . . . . . NAV-750/A/B.	8-60
Remote Channeling Board Theory of Operation . . . . . NAV-750/A/B, (Ref. Dwg. 3-16-0018).		8-61
8-23	Remote Channeling Board Schematic. . . . . (Dwg. 3-16-0018), NAV-750/A/B.	8-63
8-24	Phase Lock Board Parts Layout (Dwg. 3-16-0019-2),. NAV-750 S/N 101-125.	8-64
8-25	Phase Lock Board Schematic . . . . . (Dwg. 4-16-0019-1), NAV-750 S/N 101-125.	8-65
8-26-1	12.5 kHz Phase Lock Board Parts Layout . . . . . (Dwg. 3-16-0206-3), Eff: S/N 126-169, 171, 181, 182, & 183.	8-66
8-26-2	12.5 kHz Phase Lock Board Parts Layout . . . . . Eff: NAV-750/A S/N 170, 172 thru 180, 184 and on.	8-67
8-27	12.5 kHz Phase Lock Board Parts Layout . . . . . (Top View) NAV-750B S/N 2001 & on.	8-69
8-27A	12.5 kHz Phase Lock Board Parts Layout . . . . . (Bottom View) NAV-750B S/N 2001 & on.	8-70
12.5 kHz Phase Lock Assembly Theory of Operation. . . . . NAV-750B (Ref. Dwg. 3-16-0297).		8-71
8-28	12.5 kHz Phase Lock Loop Schematic . . . . . (Dwg. 3-16-0206) NAV-750/A.	8-79
8-29	12.5 kHz Phase Lock Loop Schematic . . . . . (Dwg. 3-16-0297) NAV-750B.	8-80
8-30	Digital Readout and Display Assembly . . . . . Parts Layout, NAV-750/A/B.	8-81
Digital Readout Assembly Theory of Operation, ... NAV-750/A/B, (Ref. Dwg. 3-16-0178 & 1-16-0221).		8-83
8-31	Digital Readout Schematic (Dwg. 3-16-0178), NAV-750/A/B.	8-87

TABLE OF CONTENTS

Figure		Page
8-32	Counter Input Divider Schematic . . . . . (Dwg. 1-16-0221), NAV-750/A/B.	8-88
8-33	Modulator Amplifier Mechanical Assy . . . . . and Parts Layout (Dwg. 3-16-0060-2), Eff: NAV-750 Prior to S/N 408, NAV-750A Prior to S/N 381.	8-89
8-34	Modulator Amplifier Board Parts Layout. . . . . Eff: NAV-750 S/N 408 & on, NAV-750A S/N 381 & on.	8-91
8-35	Modulator Amplifier Board Parts Layout. . . . . NAV-750B S/N 2001 & on.	8-92
Mod. Amp. Assembly	Theory of Operation,. . . . . NAV-750B (Ref. Dwg. 4-16-0272).	8-93
8-36	Modulator Amplifier Schematic . . . . . (Dwg. 3-16-0060-2), Eff: NAV-750 Prior to S/N 408, NAV-750A Prior to S/N 381.	8-97
8-37	Modulator Amplifier Schematic . . . . . (Dwg. 4-16-0337), Eff: NAV-750 S/N 408 & on, NAV-750A S/N 381 & on.	8-98
8-38	Modulator Amplifier Schematic . . . . . (Dwg. 4-16-0272), NAV-750B S/N 2001 & on.	8-99
8-39	Oscillator Board Parts Layout, NAV-750.	8-100
8-40	Oscillator Board Parts Layout,. . . . . NAV-750A S/N 381 & on.	8-101
8-41	Oscillator Board Parts Layout,. . . . . NAV-750B S/N 2001 & on.	8-102
RF Oscillator	Theory of Operation, NAV-750 . . . . . (Ref. Dwg. 3-16-0022).	8-103
RF Oscillator	Theory of Operation, NAV-750B. . . . . (Ref. Dwg. 4-16-0285).	8-105
8-42	Oscillator Schematic (Dwg. 3-16-0022),. . . . . NAV-750.	8-107
8-43	Oscillator Schematic (Dwg. 4-16-0334),. . . . . NAV-750A S/N 381 & on.	8-108

TABLE OF CONTENTS

Figure		Page
8-44	Oscillator Schematic (Dwg. 4-16-0285),. . . . . NAV-750B S/N 2001 & on.	8-109
8-45	Eight-Step Oscillator Parts Layout, ... NAV-750A Prior to S/N 381.	8-110
8-46	Eight-Step Oscillator Schematic . . . . . (Dwg. 3-16-0172A), NAV-750A Prior to S/N 381.	8-111
8-47	Buffer Amplifier Schematic and Parts Layout . . . (Dwg. 2-16-0143), Eff: NAV-750 Prior to S/N 403, NAV-750A Prior to S/N 381.	8-112
8-48	Buffer Amplifier Board Parts Layout,. . . . . Eff: NAV-750 S/N 403 & on, NAV-750A S/N 381 & on, NAV-750B S/N 2001 & on.	8-113
8-49	Buffer Amplifier Schematic (Dwg. 2-16-0309) . . . Eff: NAV-750 S/N 403 & on, NAV-750A S/N 381 & on, NAV-750B S/N 2001 & on.	8-115
8-50	Tune Line Filter Assembly (Dwg. 2-16-0250) Eff: As required for all models.	8-116
8-51	Tune Line Filter Schematic (Dwg. 1-16-0252) Eff: As required for all models.	8-117

TABLE OF CONTENTS

SECTION IX PARTS LIST

		Page
9.1	Introduction.	9-1
9.2	Front Panel Assy.	9-2
	•Delta F Tuning Cap. Assy.	9-4
	•Digital Display Assy.	9-5
9.3	Back Panel Assy..	9-7
	•200V dc Power Supply. . . . . (All units S/N 101 thru 447)	9-7
	•170V dc Power Supply. . . . . (All units S/N 448 & on)	9-8
9.4	Card Cage Assy.	9-9
	•Bearing Check Board Assy. (PC-1).	9-9
	••Bearing Corrector Ckt. . . . . (Included at manufacturer's option)	9-11
	•30 Hz Sine Board Assy. (PC-2)	9-12
	•Tone Summation Board Assy. (PC-3) . . . . . (For NAV-750/A only)	9-14
	•Tone Summation Board Assy. (PC-3) . . . . . (For NAV-750B only)	9-15
	•Bearing Logic Board Assy. (PC-4).	9-16
	•Localizer/Bearing Control Board Assy. (PC-5).	9-17
	•Frequency Control Board Assy. (PC-6)	9-19
	•Remote Channeling Board Assy. (PC-7).	9-20
9.5	Floor Assy.	9-22
	•25 kHz Phase-Lock Assy. . . . . (Effective All units from S/N 601 to approx. 125)	9-22
	•12.5 kHz Phase-Lock Assy. . . . . (Effective All NAV-750/A units S/N 126 thru 169, 171, 181, 182, & 183)	9-24
	••12.5 kHz Phase-Lock PC Board Assy. . . . . (Effective All NAV-750/A units S/N 170, 172 thru 180, 184 and on)	9-27
	•12.5 kHz Phase-Lock Assy. . . . . (Effective All NAV-750B units S/N 2001 & on)	9-29
	•Modulator Amplifier Assy. . . . . (Effective All NAV-750/A units S/N 101 thru 380)	9-32
	•Modulator Amplifier Assy. . . . . (Effective All NAV-750/A units S/N 381 & on)	9-33
	•Modulator Amplifier Assy. . . . . (Effective All NAV-750B units S/N 2001 & on)	9-34
	•Oscillator Assembly . . . . . (Effective All NAV-750 units (Standard) S/N 101 & on)	9-35
	•Oscillator Assy., 8 step. . . . . (Effective All NAV-750A units S/N 101 thru 380)	9-37

TABLE OF CONTENTS

SECTION IX

		Page
9.5	•Oscillator Assy. (Effective All NAV-750A units S/N 381 & on)	9-39
	•Oscillator Assy. (Effective All NAV-750B units S/N 2001 & on)	9-41
	•Dual Buffer Amp. Assy. (Effective All NAV-750 units S/N 101 thru 402 and NAV-750A units thru S/N 380)	9-42
	•Dual Buffer Amp. Assy. (Effective NAV-750 units S/N 403 & on, NAV-750A S/N 381 & on, and NAV-750B units S/N 2001 & on)	9-42
	•Single Buffer Amp. Assy. (Effective All NAV-750 units S/N 101 thru 402 and NAV-750A units thru S/N 380)	9-43
	•Single Buffer Amp. Assy. (Effective NAV-750 S/N 403 & on, NAV-750A S/N 381 & on, and NAV-750B units S/N 2001 & on).	9-43
9.6	Wire Harness Assy.	9-44
	•Channel Annunciator Assy..	9-44
9.7	Semi-Rigid Coax. Assemblies. (Effective All NAV-750 units S/N 101 thru 402 and NAV-750A units thru S/N 380)	9-45
9.8	Semi-Rigid Coax. Assemblies. (Effective All NAV-750 units S/N 403 and on, NAV-750A S/N 381 and on, and NAV-750B units S/N 2001 and on).	9-46
	Line Cable	9-47
	Accessory Cable (37 position) Connector Kit.	9-47
9.9	Covers and Misc. Hardware.	9-48
Table 9-1	Spare Parts Recommendations.	9-49

TABLE OF CONTENTS

SECTION X MECHANICAL ASSEMBLIES

Figure		Page
10-1-1	Composite Assembly (Dwg. 3-16-0052), Eff: S/N 101-380.	10-1
10-1-2	Composite Assembly (Dwg. 3-16-0052-S), Eff: S/N 381 & on.	10-2
10-2	Wire Harness Assy. (Dwg. 4-16-0114), NAV-750	10-3
10-3	Wire Harness Assy. (Dwg. 4-16-0384), NAV-750A.	10-4
10-4	Wire Harness Assy. (Dwg. 4-16-0317), NAV-750B.	10-5
10-5	Delta "F" Tuning Capacitor Assy., (Dwg. 2-16-0205).	10-7
10-6	Attenuator Assy., (Dwg. 3-16-0225)	10-8
10-7	Calibration Access Drawing, (Dwg. 3-16-0237).	10-9
10-8	Channel Ennunciator Assy., (Dwg. 2-16-0115).	10-10
10-9	RF Floor - Coax Assy, Connection Diagram, (Dwg. 3-16-0163).	10-11
10-10	Card Cage Assy. (Dwg. 3-16-0036)	10-12
10-11	Rear Panel Wiring (Dwg. 3-16-0051)	10-13
10-12	Eight Step Oscillator Assy. (Dwg. 3-16-0187)	10-14
10-13-1	Oscillator Assy. (Dwg. 3-16-0359), NAV-750.	10-15
10-13-2	Oscillator Assy. (Dwg. 3-16-0360), NAV-750A.	10-16
10-14-1	Single Buffer Amp. (Dwg. 2-16-0125). Eff: NAV-750 Prior to S/N 403, NAV-750A Prior to S/N 381.	10-17
10-14-2	Single Buffer Amp. (Dwg. 2-16-0313). Eff: NAV-750 S/N 403 & on, NAV-750A S/N 381 & on, NAV-750B S/N 2001 & on.	10-18

TABLE OF CONTENTS

Figure		Page
10-15-1	Dual Buffer Amp. (Dwg. 3-16-0161). . . . . Eff: NAV-750 Prior to S/N 403, NAV-750A Prior to S/N 381.	10-19
10-15-2	Dual Buffer Amp. (Dwg. 3-16-0311). . . . . Eff: NAV-750 S/N 403 & on, NAV-750A S/N 381 & on, NAV-750B S/N 2001 & on.	10-20

NAV 750 INTERCONNECT DIAGRAM

LOCALIZER / BRG. CONTROL BOARD

BEARING CHECK BOARD

BEARING LOGIC BOARD

FREQUENCY CONTROL BOARD

30Hz SINE BOARD

MOD-AMP. ASS'Y

OSC. ASS'Y

DIGITAL READOUT/ DISPLAY

BACK PNL / PWR SUPPLY

LOCK ASS'Y

REMOTE CHANNELING

FREQUENCY SWITCH S28

METER FUNCTION SWITCH
(SW SHOWN IN EXTREME CW. POSITION)

TONE SUMMATION BOARD

REMOTE CHANNELING BOARD

NOTES:
1. * INDICATES 1% TOLERANCE, ¼W RESISTOR
2. REF DWG:
WIRE LIST 1-16-0231
HARNESS ASSY 4-16-0114
3. LOCATED ON 1-16-0113 ASSY
4. UNLESS OTHERWISE SPECIFIED:
ALL RESISTORS ARE ¼W, 10%
5. AS REQUIRED. NOT ON ALL UNITS

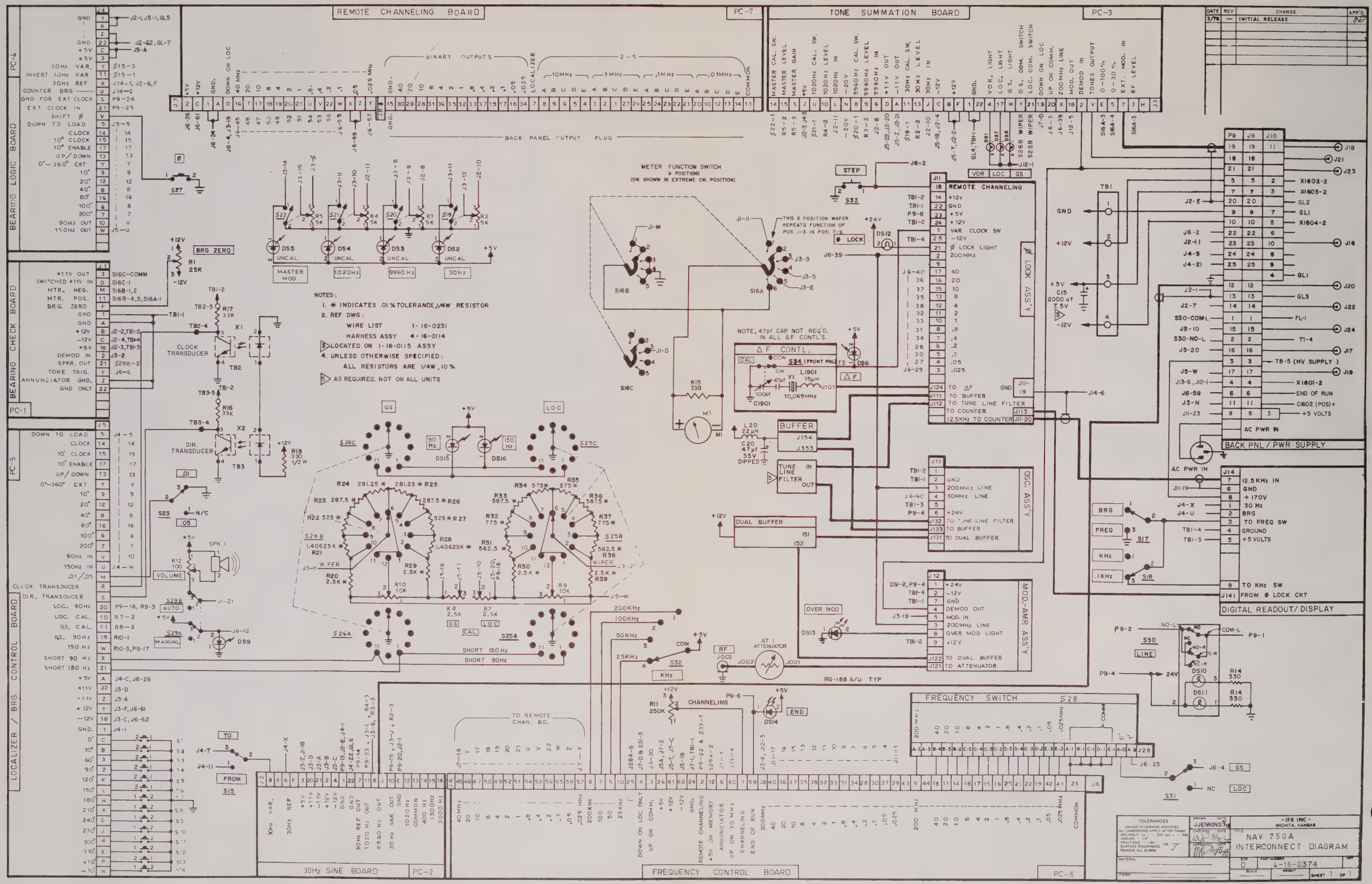
REMOTE CHANNELING BOARD
PC-7
TONE SUMMATION BOARD
PC-3
BEARING LOGIC BOARD
PC-4
BEARING CHECK BOARD
PC-1
LOCALIZER / BRG. CONTROL BOARD
PC-5
BACK PANEL OUTPUT PLUG
METER FUNCTION SWITCH
9 POSITIONS
(SW. SHOWN IN EXTREME CW. POSITION)
NOTES:
1. * INDICATES .01% TOLERANCE, 1/4W RESISTOR
2. REF DWG:
WIRE LIST 1-16-0231
HARNESS ASSY 4-16-0114
3. LOCATED ON 1-16-0115 ASSY
4. UNLESS OTHERWISE SPECIFIED:
ALL RESISTORS ARE 1/4W, 10%
AS REQUIRED. NOT ON ALL UNITS
REMOTE CHANNELING
VOR LOC GS
LOCK ASS'Y
ΔF CONTL.
NOTE; 47pf CAP. NOT REQ'D. IN ALL ΔF CONTL'S.
BUFFER
TUNE IN LINE FILTER OUT
OSC. ASS'Y
DUAL BUFFER
MOD-AMP. ASS'Y
OVER MOD
RG-188 A/U TYP
CLOCK TRANSDUCER
DIR. TRANSDUCER
TO REMOTE CHAN. BD.
FREQUENCY SWITCH S28
30Hz SINE BOARD
PC-2
FREQUENCY CONTROL BOARD
PC-6
BACK PNL / PWR SUPPLY
DIGITAL READOUT/ DISPLAY
DATE 3/76
REV —
CHANGE INITIAL RELEASE
APP'D
- IFR INC -
WICHITA, KANSAS
NAV 750A
INTERCONNECT DIAGRAM
D 4-16-0374

8-2 Fig. 8-2

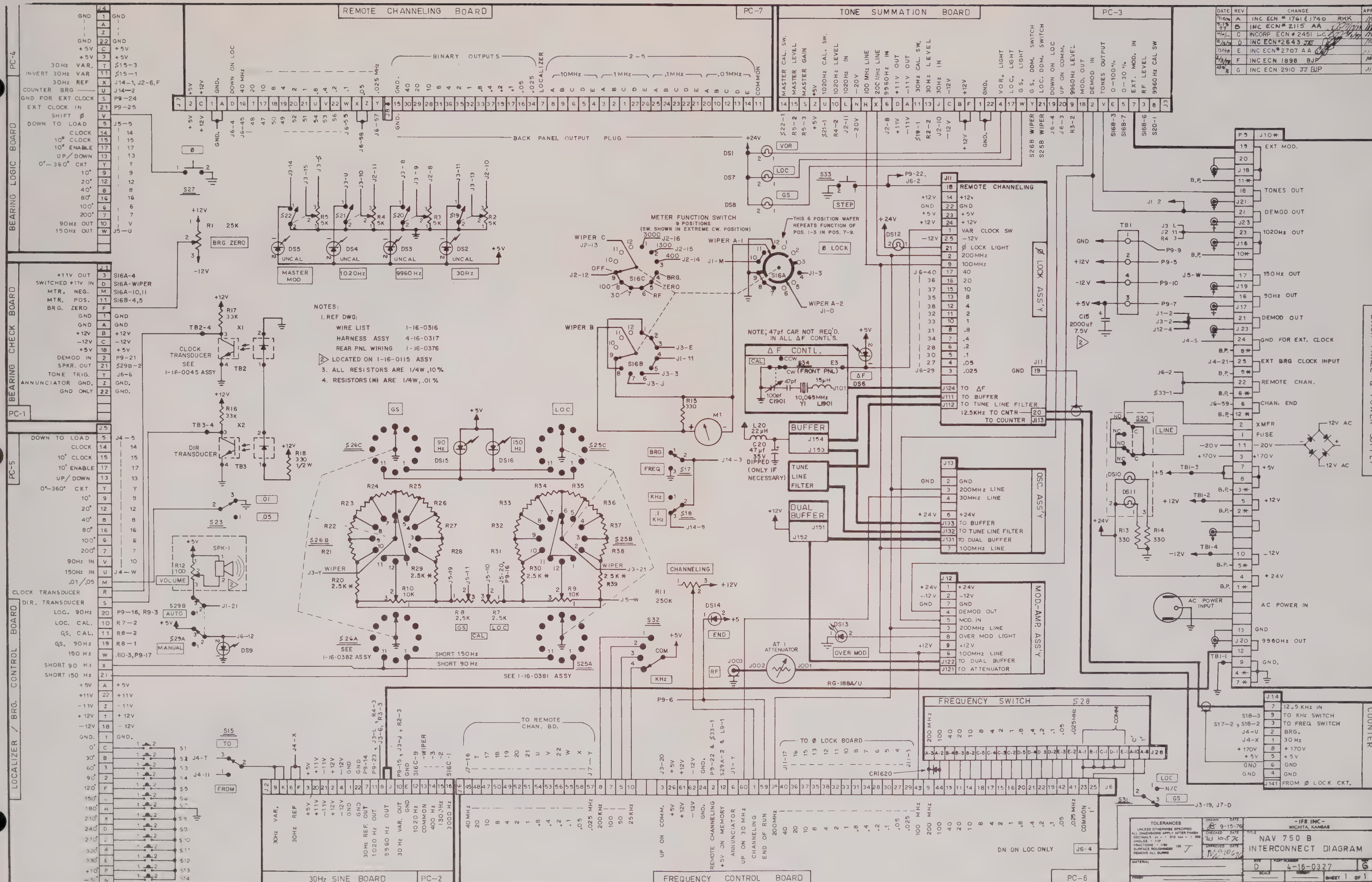

Fig. 8-3 8-3/8-4 blank

NOTES:
1. PRIOR TO SERIAL NO. 183 ALL 750A LOCALIZER SWITCHES WERE WIRED AS A DASH ONE.

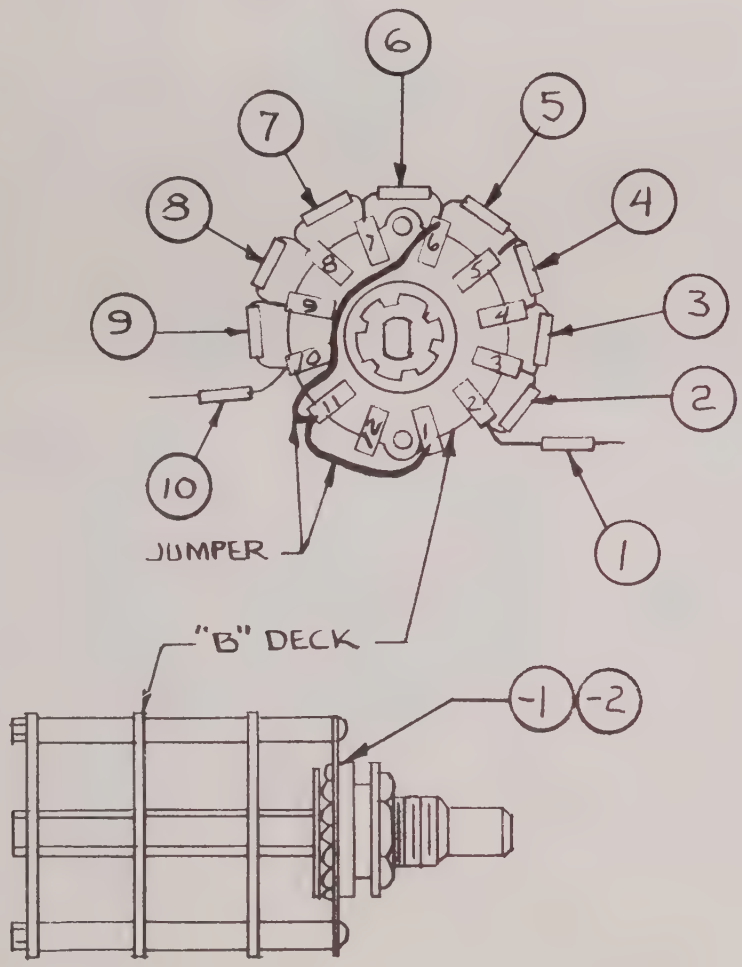

NAV-750		NAV-750A/B	
WITH 1% RES.		WITH .01% RES.	
RES. NO	VALUE	RES. NO	VALUE
1	10K	1	2.5K
2	2.26K	2	562.5Ω
3	3.09K	3	775Ω
4	2.32K	4	587.5Ω
5	2.32K	5	575Ω
6	2.32K	6	575Ω
7	2.32K	7	587.5Ω
8	3.09K	8	775Ω
9	2.26K	9	562.5Ω
10	10K	10	2.5K
1-16-0126-1		1-16-0126-2	

REQ'D	PART NO.	DESCRIPTION
A/R	26 GA.	TEFLON SLEEVING
A/R	26 GA	BUSS WIRE
NOTED	5102	"VISHAY." .01% 1/4W RES.
NOTED	NA-55D-1	"CORNING" 1% 1/4W RES.
1/1	1-76-0116	MODIFIED "CENTRALAB" SWITCH

INSTRUMENT FLIGHT RESEARCH CORP.
4053 Navajo Lane
Wichita, Ks.

LOCALIZER SWITCH WIRING NAV-750 & NAV-750 A/B

DWN [illegible] DATE 1/29/75
CHKD [illegible] DATE 2-21-75
APP [illegible] DATE 2-21-75

PART NO 1-16-0126-1&-2 REV E DATE 4-3-78 DWN JAJ APP WW

SCALE ——— MODEL NAV-750 SHT. 1 of 1

Fig. 8-4

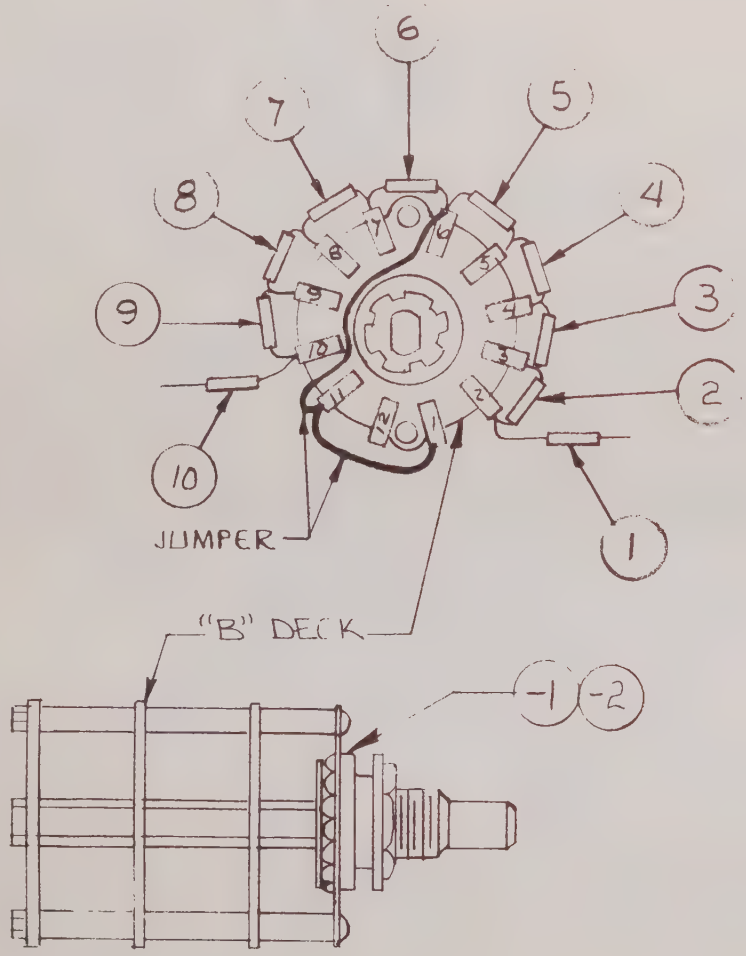

Fig. 8-5

NAV-750 WITH 1% RES.		NAV-750A/B WITH .01% RES.	
RES. NO.	VALUE	RES. NO.	VALUE
1	20K	1	2.5K
2	11.3K	2	1.40625K
3	4.22K	3	525Ω
4	2.26K	4	287.5Ω
5	2.26K	5	281.25Ω
6	2.26K	6	281.25Ω
7	2.26K	7	287.5Ω
8	4.22K	8	525Ω
9	11.3K	9	1.40625K
10	20K	10	2.5K
1-16-0127-1		1-16-0127-2	

REQ'D	PART NO.	DESCRIPTION
A/R	26 GA.	TEFLON SLEEVING
A/R	26 GA.	BUS WIRE
NOTED	5102	"VISHAY" .01% 1/4W RES.
NOTED	NA-55D-1	"CORNING" 1% 1/4W RES.
1/1	1-76-0116	MODIFIED "CENTRALAB" SWITCH

INSTRUMENT FLIGHT RESEARCH CORP.
4053 Navajo Lane
Wichita, Ks.

DWN DATE: B 1/29/75
CHKD DATE: T.E 2-21-75
APP DATE: W.E 2-21-75

GLIDE SLOPE SWITCH WIRING NAV-750 & NAV-750A/B

PART NO 1-16-0127 | REV E DATE 7/13/77 | DWN Archer APP MO 7/18/77

SCALE —— | MODEL NAV-750 | SHT. 1 of 1

DATE	REV	CHANGE	APP'D
11/23/76	A	REMOVED LINE FROM 230VAC RKR DETAIL. REASON: DFTG ERROR	MJ

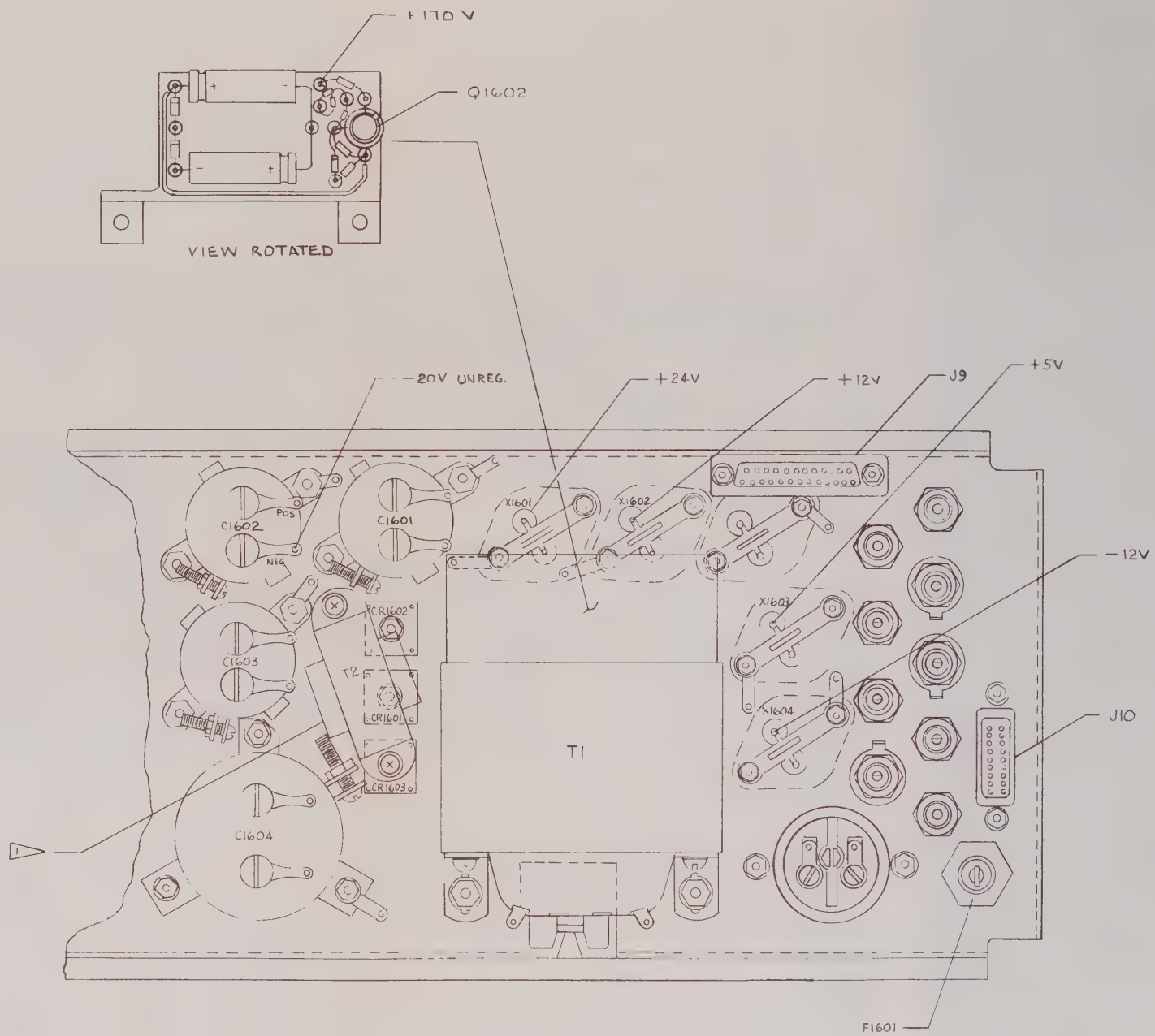

1 BEGINNING WITH S/N 270, TRANSFORMER T-2 HAS BEEN REMOVED AND REPLACED BY TRANSFORMER T-1, TERMINALS 12 & 13.

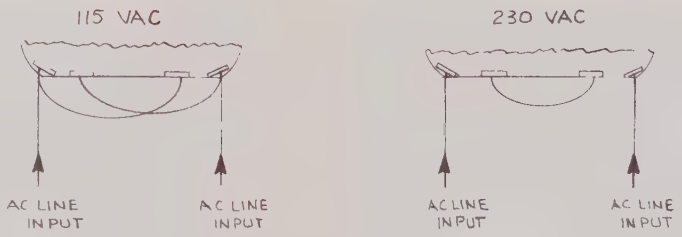

NEXT ASS'Y	QTY	MODEL	ITEM	REQ'D	PART NO.	DESCRIPTION
		NAV-750				
APPLICATION						LIST OF MATERIALS

TOLERANCES
UNLESS OTHERWISE SPECIFIED
ALL DIMENSIONS APPLY AFTER FINISH
DECIMALS .xx = ± .010 .xxx = ± .005
ANGLES ± 1/2°
FRACTIONS ± 1/64
SURFACE ROUGHNESS 125
REMOVE ALL BURRS

DRAWN GLD 12/4/74
CHECKED 12/7/74
APPROVED 12-31-74

INSTRUMENT FLIGHT RESEARCH CORPORATION
WICHITA, KANSAS

TITLE: REAR PANEL POWER SUPPLY VOLTAGE TEST POINTS AND COMPONENT DESIGNATIONS

MATERIAL
TREATMENT
FINISH

SIZE C | PART NUMBER 3-16-0238 | REV A
SCALE 1:1 | WEIGHT | SHEET 1 OF 1

DATE	REV	CHANGE	APP'D
6/6/74	A	INCORP. ECN-1	
8-5-74	B	INCORPORATED ECN#2	
1/24/75	C	INCORPORATED ECN # 221	SSD
1/24/75	D	INCORPORATED ECN #234	SSD
9/30/75	E	INCORPORATED ECN #758	PLF

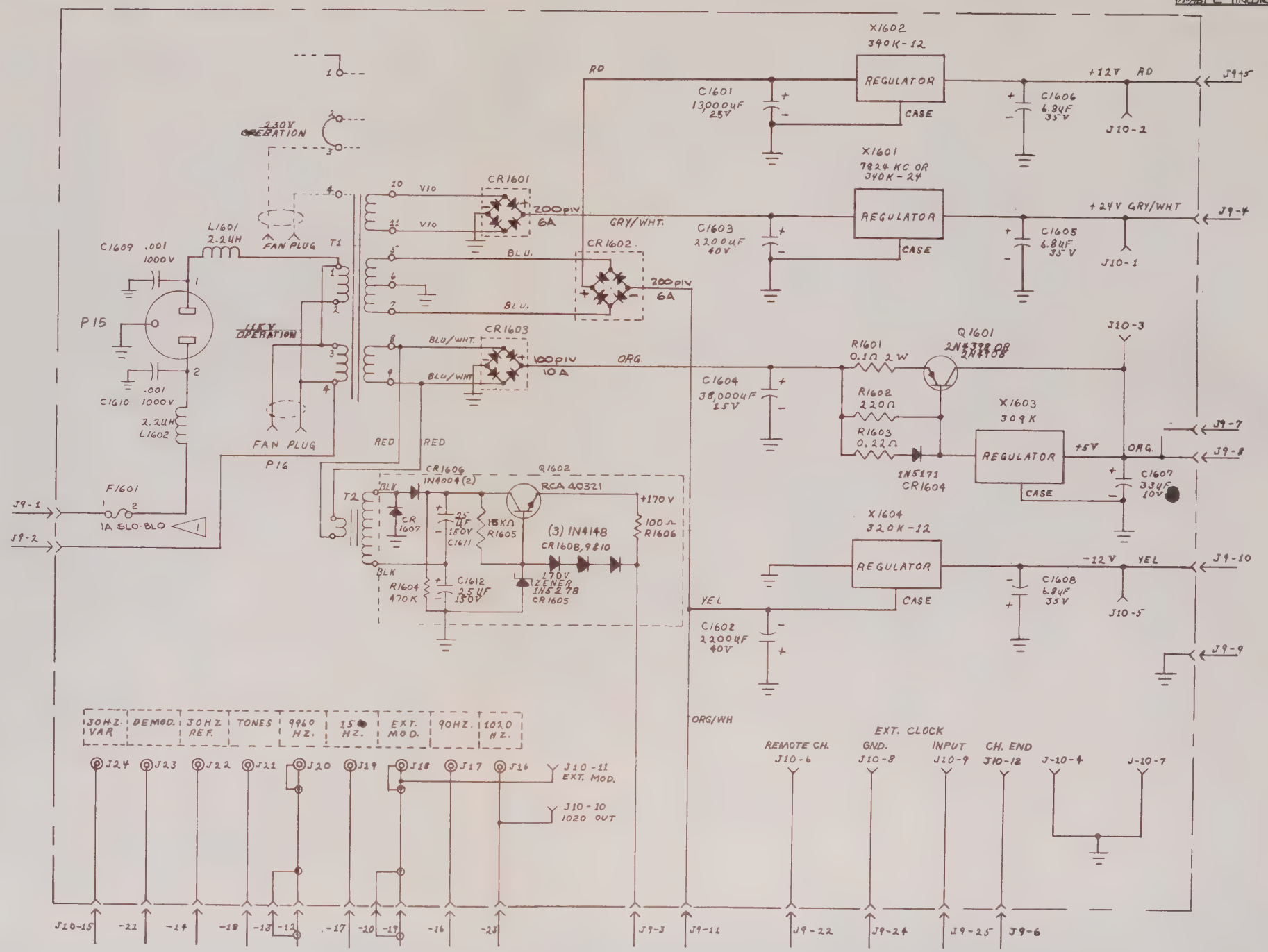

NOTES:
1. USE 1/2 AMP SLO-BLO FUSE FOR 220V OPERATION.

1-16-0051	1	NAV 750				SCHEMATIC
NEXT ASS'Y	QT'Y	MODEL	ITEM REQ'D	PART NO.		DESCRIPTION
APPLICATION			LIST OF MATERIALS			

TOLERANCES
UNLESS OTHERWISE SPECIFIED
ALL DIMENSIONS APPLY AFTER PLATING
DECIMALS: ± .005
ANGLES: ± 1/2°
FRACTIONS: ± 1/64
SURFACE ROUGHNESS 125
REMOVE ALL BURRS

MATERIAL
TREATMENT
FINISH

DRAWN WP 8-13-73
CHECKED RR 8-31-73
APPROVED WP 9-14-73

INSTRUMENT FLIGHT RESEARCH CORPORATION
WICHITA, KANSAS

TITLE
NAV 750 POWER SUPPLY
EFFECTIVE SN 101 - 375

SIZE C | FSCM NO. J-16-0142A | REV E
SCALE | WEIGHT | SHEET 1 OF 1

DATE	REV.	CHANGE	APP'D
7-7-75	A	INCORPORATED ECN # 1 JNJ	SBD
11-24-75	B	INCORPORATED ECN # 222 SBD	SBD
4-30-76	C	INCORPORATED ECN # 259 SBD	SBD

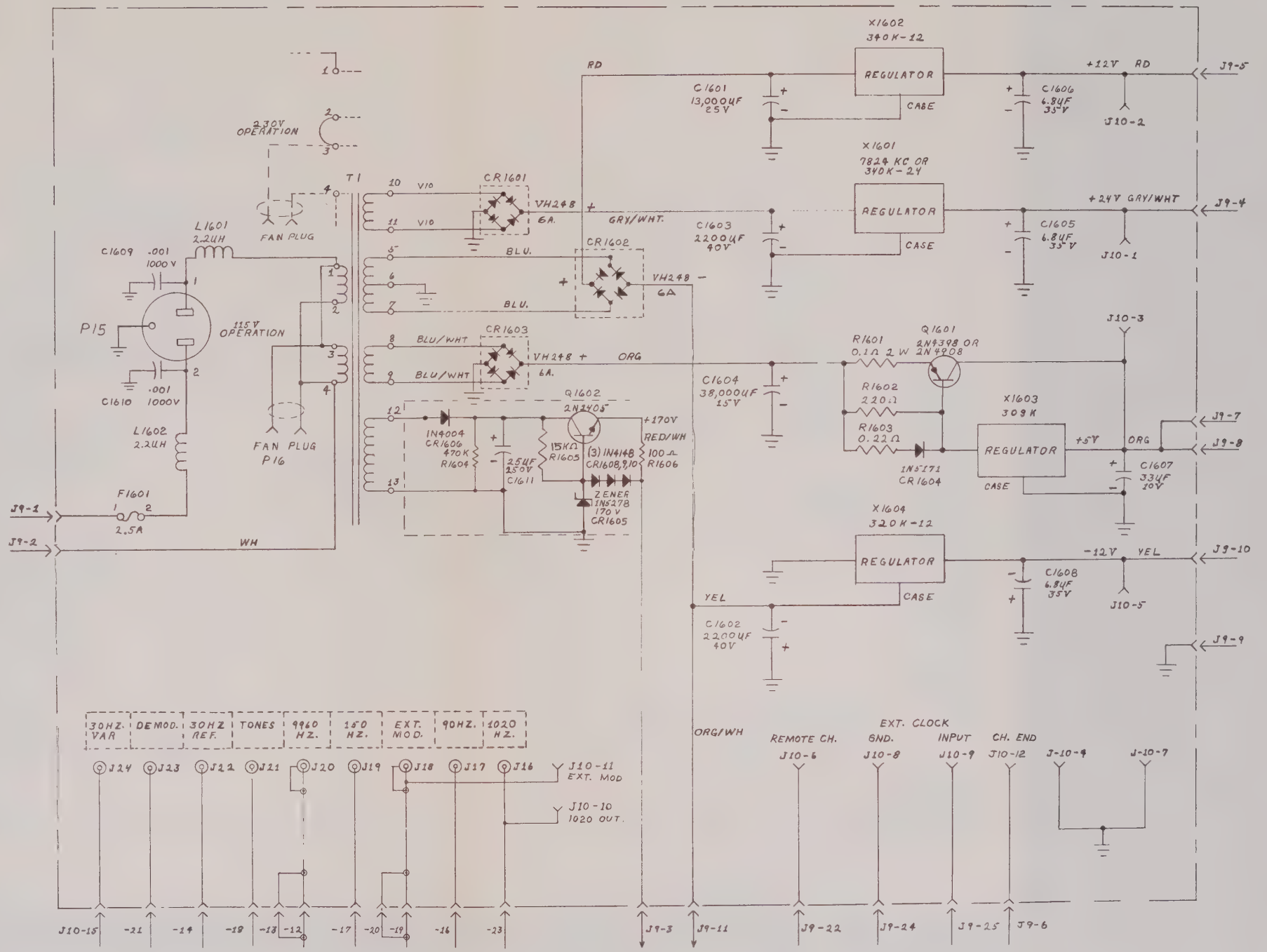

NEXT ASS'Y	QT'Y	MODEL	ITEM	REQ'D	PART NO.	DESCRIPTION
		NAV 750				SCHEMATIC
APPLICATION						LIST OF MATERIALS

TOLERANCES
UNLESS OTHERWISE SPECIFIED
ALL DIMENSIONS APPLY AFTER FINISH
DECIMALS: ± .008
ANGLES: ± 1/2°
FRACTIONS: ± 1/64
SURFACE ROUGHNESS 125 ✓
REMOVE ALL BURRS

MATERIAL
TREATMENT
FINISH

DRAWN DATE WFP 8-31-75
CHECKED DATE KP 8-31-75
APPROVED DATE

INSTRUMENT FLIGHT RESEARCH CORPORATION
WICHITA, KANSAS

TITLE
NAV 750 POWER SUPPLY
EFFECTIVE S/N 271 ON

SIZE C | PART NUMBER 3-26-01428 | REV C
SCALE | WEIGHT | SHEET 1 OF 1

Fig. 8-7 (Sheet 2 of 3)

DATE	REV	CHANGE	APP'D
12-4-74	A	INCORPORATED ECN # 1	JWW
1-23-75	B	INCORPORATED ECN # 222	SSD
1-30-75	C	INCORPORATED ECN # 284	SSD
8-25-75	D	INCORPORATED ECN # 758	JWW
10-3-75	E	INCORPORATED SSD	
8-25-76	F	INC ECN # 1655 RKK	WW
11-16-76	G	INC ECN # 1698 RKK	WW
4-12-78	H	INC ECN 2936 JBJONS	WW

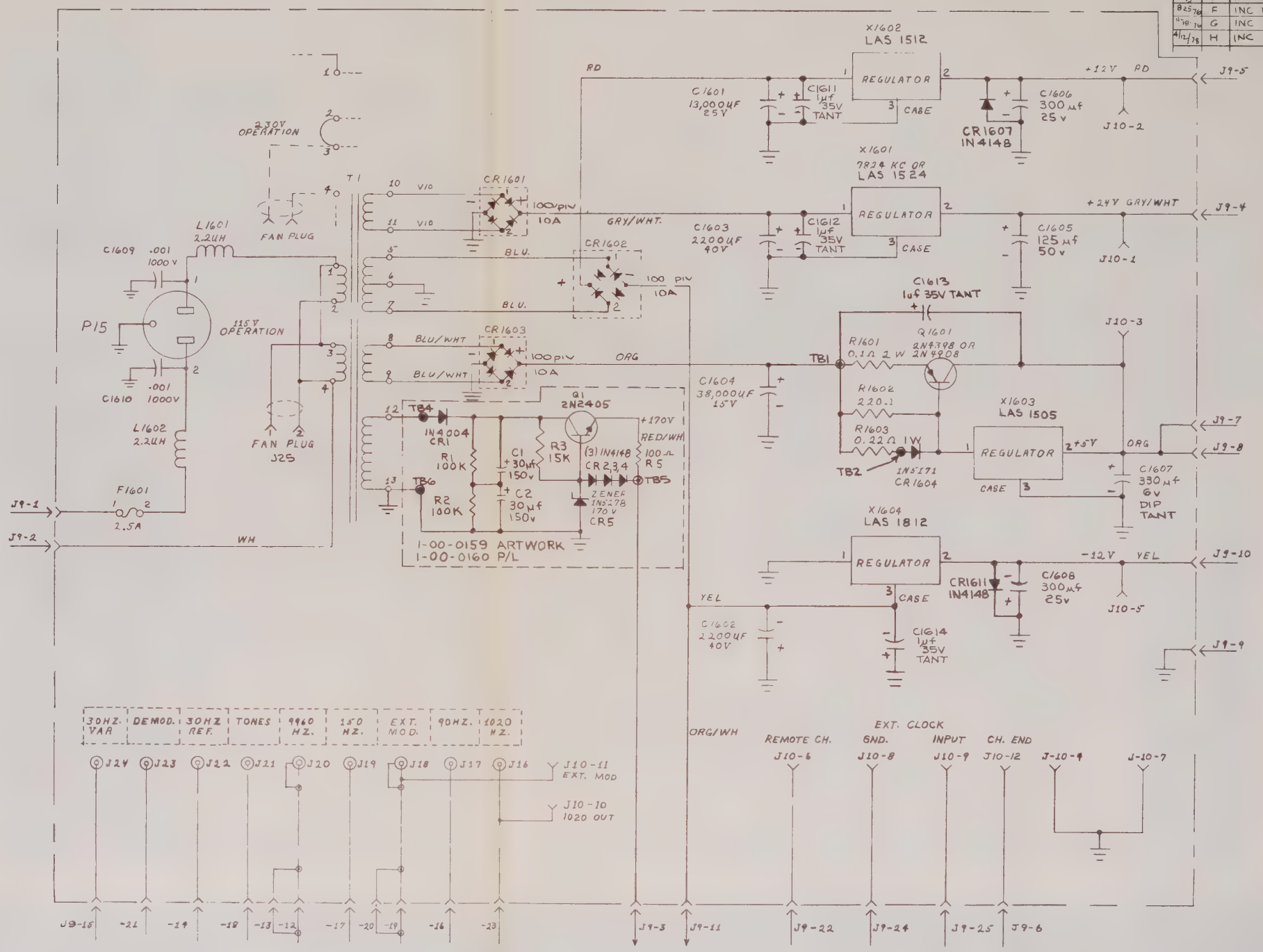

LAST USED NO'S
C1614
CR1611
L1602
Q1601
R1603
T1
X1604

1. AFTER S/N 448 PC BOARDS ARE USED

NEXT ASS'Y	QT'Y	MODEL	ITEM	REQ'D	PART NO.	DESCRIPTION
16-0051	1	NAV 750				SCHEMATIC
APPLICATION						LIST OF MATERIALS

TOLERANCES UNLESS OTHERWISE SPECIFIED ALL DIMENSIONS APPLY AFTER FINISH DECIMALS: ± .008 ANGLES: ± 1/2° FRACTIONS: ± 1/64 125 SURFACE ROUGHNESS REMOVE ALL BURRS

MATERIAL — TREATMENT — FINISH

DRAWN WFP 8-13-73 | CHECKED RRP 8-31-73 | APPROVED

INSTRUMENT FLIGHT RESEARCH CORPORATION WICHITA, KANSAS

TITLE: NAV 750 POWER SUPPLY EFFECTIVE S/N 371 ON

SIZE C | PART NUMBER 3-16-0142 | REV H | SCALE — | WEIGHT — | SHEET 1 OF 1

8-10 Fig. 8-7 (Sheet 3 of 3)

DATE	REV	CHANGE	APP'D
8/16/76	A	INC ECN 1640/1642 RKK	[illegible]
4/24/78	A1	INC ECN 2936 JJ [illegible]	[illegible]

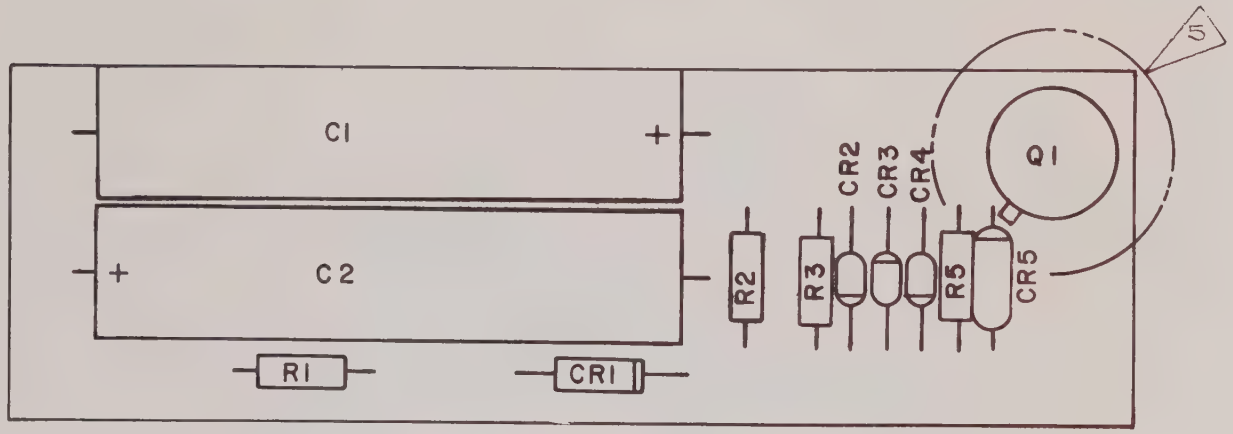

NOTES:

1. ALL RESISTORS ARE 1/4 W., 10% TOLERANCE EXCEPT AS NOTED.
2. ALL CAPACITOR VALUES ARE IN µF EXCEPT AS NOTED.
3. COMPONENT LEADS MAY EXTEND .04 TO .06 BEYOND BOTTOM OF BOARD AFTER SOLDERING.
4. MAXIMUM HEIGHT OF COMPONENTS TO BE .35 FROM COMPONENT SIDE OF BOARD.
5. MOUNT TRANSISTOR ON "BIVAR"/EQUIV #605-085 MOUNTING PAD AND COVER WITH "KAPLUG"/EQUIV. #BPF CAP.
6. PC BOARD IS PLATED (1) SIDE ONLY AND COMPONENTS ARE MOUNTED ON NONPLATED SIDE ONLY.

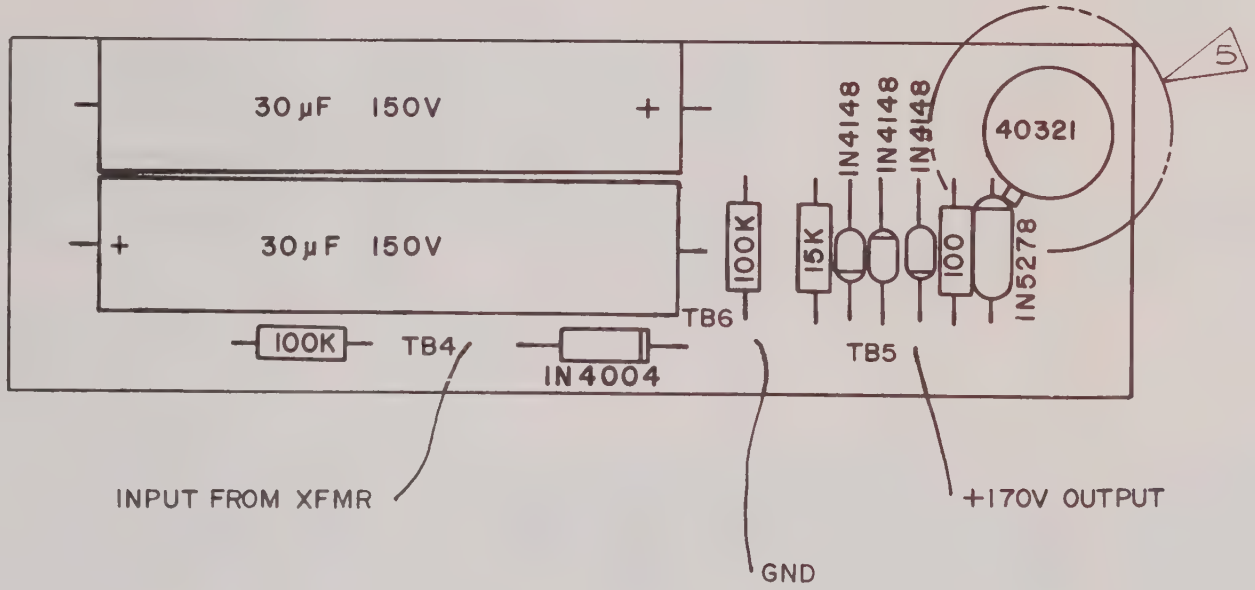

NEXT ASS'Y	QT'Y	MODEL	ITEM	REQ'D	PART NO.	DESCRIPTION
16-0051	1	NAV-750, A, B				
25-0190	1	RD-300	1	1	00-0160	PC BOARD ASS'Y

APPLICATION — LIST OF MATERIALS

TOLERANCES
UNLESS OTHERWISE SPECIFIED
ALL DIMENSIONS APPLY AFTER FINISH
DECIMALS: ± .005
ANGLES: ± 1/2°
FRACTIONS: ± 1/64
SURFACE ROUGHNESS 125
REMOVE ALL BURRS

DRAWN JNV DATE 2-2-77
CHECKED RKK DATE 2/8/77
APPROVED MW DATE 2/10/77

INSTRUMENT FLIGHT RESEARCH CORPORATION
WICHITA, KANSAS

TITLE: 170 VDC POWER SUPPLY PC BOARD ASS'Y

MATERIAL —
TREATMENT —
FINISH

SIZE B | PART NUMBER 2-00-0160 | REV A1
SCALE 2X | WEIGHT — | SHEET 1 OF 1

Fig. 8-8 (Sheet 1 of 2)

DATE	REV	CHANGE	APP'D

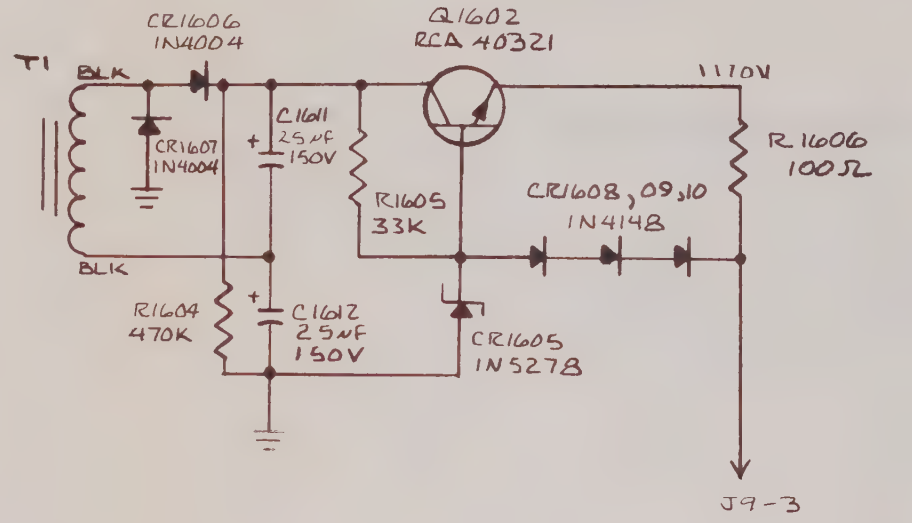

NOTE:

1. REF ECN #1 OF 3-16-0142A FOR DETAILS OF CHANGES & REASON FOR SEPARATE PRINT OF THIS CKT.

—	—	NAV-730/A/B	1	1	1-16-0224	SCHEMATIC
NEXT ASS'Y	QT'Y	MODEL	ITEM	REQ'D	PART NO.	DESCRIPTION
APPLICATION			LIST OF MATERIALS			

TOLERANCES
UNLESS OTHERWISE SPECIFIED
ALL DIMENSIONS APPLY AFTER FINISH
DECIMALS: .xx = ± .010 .xxx = ± .005
ANGLES: ± 1/2°
FRACTIONS: ± 1/64
SURFACE ROUGHNESS 125 J
REMOVE ALL BURRS

DRAWN DATE 11-13-74
CHECKED DATE 11-13-74
APPROVED DATE 11-20-74

MATERIAL
TREATMENT
FINISH

INSTRUMENT FLIGHT RESEARCH CORPORATION
WICHITA, KANSAS.

TITLE
170V POWER SUPPLY
(SCHEMATIC)

SIZE	PART NUMBER	REV
	1-16-0224	

SCALE — WEIGHT — SHEET 1 OF 1

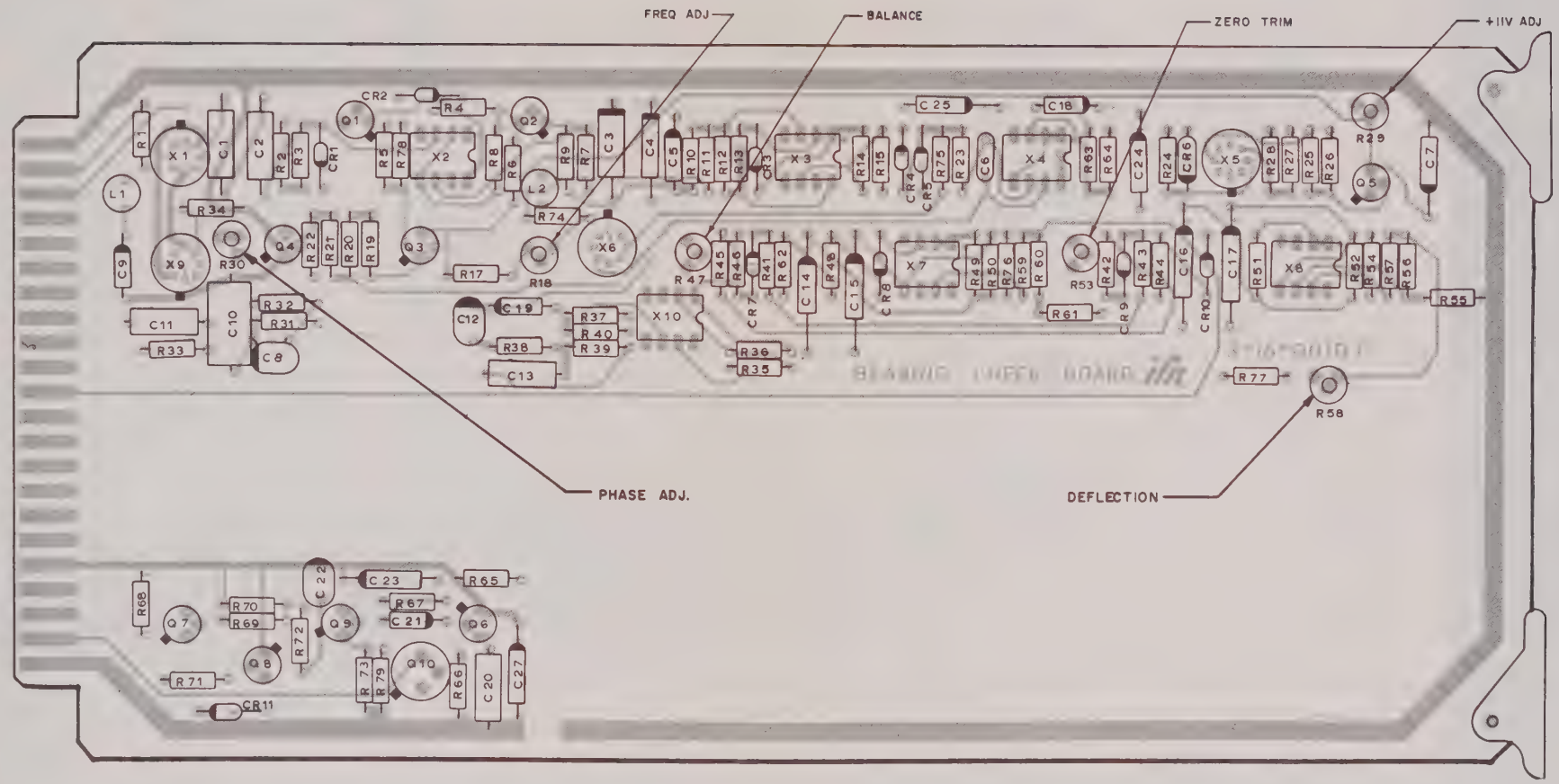

Fig. 8-9-1 BEARING CHECK BOARD PARTS LAYOUT

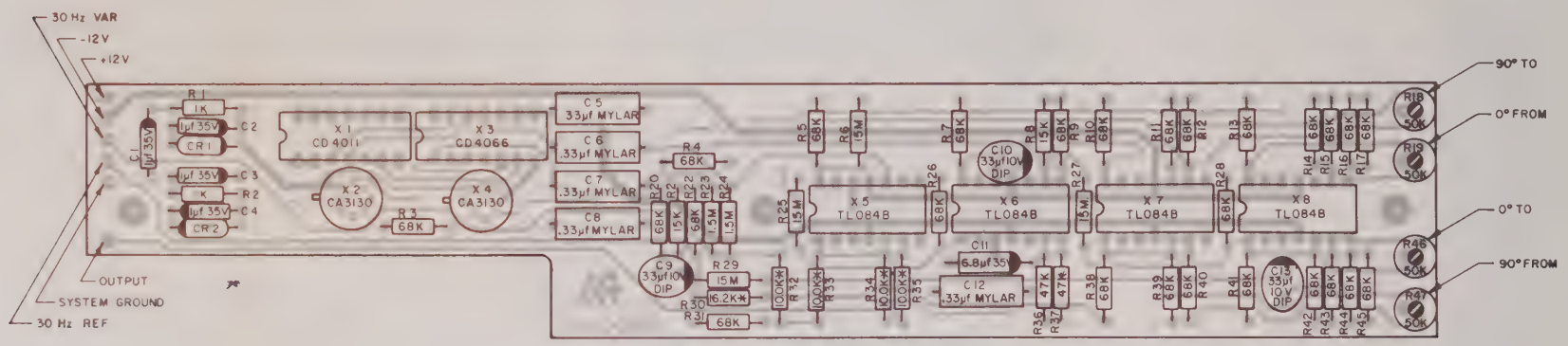

Fig. 8-9-2 BEARING CORRECTOR BOARD PARTS LAYOUT

BEARING CHECK BOARD THEORY OF OPERATION

(NAV-750/A/B)

3-16-0021

1-1. Introduction.

1-2. The Bearing Check Board (PC-1) provides a bearing check of the analog bearing circuitry of the NAV-750 by analyzing the composite signal from the DEMOD OUT Jack of the Mod Amp, when the set is adjusted for a bearing of 90 degrees. The Bearing Check Board also contains the 11V & 5.5V regulators used on the Bearing Check Board and the circuitry used to drive the speaker during frequency channeling.

2-1. 30 Hz REF Derivation.

2-2. The DET INPUT from the DEMOD OUT Jack of the Mod Amp is buffered by X101 (72741L). The output of X101 is processed by a high pass filter consisting of C101, C102, R102 & R103. The high pass filter removes the 30 Hz component of the composite signal. This results is a 9960 Hz signal, FM modulated at 30 Hz, which is applied to the input of X102A pin 3 (72558). Op amp limiter X102A compares the output of the high pass filter to the 5.5V on X102A pin 2. When the voltage on X102A pin 3 exceeds 5.5V, the output of X102A pin 7 switches to a high level. When the voltage on X102A pin 3 is less than 5.5V, the output on pin 7 of X102A switches to a low level. The amplitude of the 9960 Hz frequency modulated square-wave is reduced by a voltage divider and applied to the collector of the phase detector Q102 (2N5366). At Q102 it is compared to the 9960 Hz reference Signal, developed by the 9960 Hz REF oscillator, in order to derive the 30 Hz REF signal.

2-3. The 9960 Hz REF oscillator provides a gating signal to the base of Q102 turning it ON and OFF. When Q102 is turned ON any signal at the collector of Q102 will be applied to X102B pin 3. The width of the pulses at the input of X102 is inversly proportional to the phase difference between the 9960 Hz REF oscillator and the 9960 Hz signal derived from the DET INPUT.

2-4. The Phase Detector Amplifier X102B receives the 30 Hz REF frequency modulated signals from Q102 and outputs a 9960 Hz signal which is amplitude modulated by the 30 Hz REF signal. This signal is used to servo the frequency of the 9960 Hz oscillator and is also used, after 9960 Hz demodulation, as the 30 Hz REF signal.

3-1. 9960 Hz Oscillator Operation.

3-2. The 9960 Hz oscillator consists of op amp comparator X106 (MC1709CG) and op amp integrator X104A (72558). A d.c. offset is applied to X103A pin 3 (72558) by R112 & R111. X103A compares the signal from X102B pin 7 with the voltage present in X103A. X103A produces an error voltage proportional to the difference in the 9960 Hz REF oscillator output and the 9960 Hz component of the composite signal. This error voltage is inverted by X103B (72558) and applied to X104A pin 6. It is used to servo the frequency of the 9960 Hz REF oscillator to that of the 9960 Hz component of the DET INPUT signal.

3-3. The triangular-wave output of X104A is applied to X106 pin 3 where it is referenced to the voltage applied to X106 pin 2. When the voltage on X106 pin 3 is greater than the voltage on X106 pin 2, the output of X106 on pin 6 goes high. Conversely, when the voltage on X106 pin 2 is less than the reference voltage on pin 3; the output pin 6 is at a low voltage level. This produces a square-wave output of the same frequency as the triangle wave output of X104A. A coarse frequency adjustment is provided by R118. R118 is capable of changing the duty cycle of the output of X106 and the error signal seen on X104A pin 6. The square-wave output of X106 is slapped between 0V and +11V by complimentary drive transistors Q103 (2N2222) & Q104 (2N3251A) and applied to the base of Q102.

3-4. In order that the meter may be zeroed out when the METER FUNCTION SWITCH is not set to the BRG position, the +11V SWITCHED line is controlled by the METER FUNCTION SWITCH. With the +11V SWITCHED disconnected, Q101 (2N3251A) is biased to turn ON and causes the base of Q102 to be brought high. At this time, Q102 turns OFF and the output of X102B goes to a d.c. level of 5.5V. When the 11V SWITCHED is disconnected, power is also removed from X106 and Q103.

4-1. Bearing Check Operation.

4-2. The DET INPUT signal from X101 pin 6 is applied to a trap consisting of L101 & C109. This trap removes much of the 9960 Hz component of the composite signal. The 9960 Hz component is further suppressed by a low pass filter consisting of R130, R131, & C110. Filters C108 & R132, and C111 & R133 are also used to suppress 9960 Hz modulation. This processed 30 Hz VAR signal is applied to the input of op amp amplifier X109 (72741L). The output of X109 is applied to the anode of CR107 (HP2800), the cathode of CR109 (HP2800), the inverting (-) input of X110A (72558) and to the inverting (-) input of X107B (72558). This signal is called the 0° VAR signal.

4-3. Op amp X110A shifts the phase of the 30 Hz VAR signal by 180° with respect to the output of X109. The output of X110A is applied to the anode of CR110 and the cathode of CR108. This signal is called the 180° VAR signal.

4-4. The 30 Hz REF signal from X102B is processed by filters L102 & C119, C112 & R138 and C113 & R139 to remove most of the 9960 Hz present. This signal is amplified by X110B (72558). The output of X110B is applied to the noninverting (+) input of X107A (72558), via a phase detector gate consisting of CR107 & CR108. The output of X110B is also applied to the noninverting input (+) of X108A (72558), via a phase detector gate consisting of CR109 & CR110.

4-5. The phase detector gates are controlled by the 0° & 180° VAR signals. When CR107 & CR108, for example, are forward biased by the 180° & 0° VAR signals they present low impedance and the 30 Hz REF signal has little effect on X107A pin 3. When CR107 & CR108 are reverse biased by the 108° & 0° VAR signals, CR107 & CR108 do not conduct and allow the 30 Hz REF signal to be inputted on X107A pin 3. The other phase detector gate CR109 & CR110 operates in a simular manner but is complementary biased so that it samples the 30 Hz REF signal 180° out of phase with respect to CR107 & CR108.

4-6. The outputs of the phase detector gates are buffered by X107A & 108A. The outputs of X107A & X108A cause storage capacitors C114-C117 to be charged. The charge on the storage capacitors will be equal to the algebraic sum of the voltages sampled. When the NAV-750 VAR signal is set for a bearing of 90°, the 30 Hz REF signal is symmetrically sampled on the positive and negative going slopes as it cross the 0V reference level, as seen on an oscilloscope. The voltages stored in C114 & C115 and C116 & C117 will be equal. If a bearing deviation from 90° occurs on the 30 Hz VAR signal, the sampling of the phase detector gates is not symmetrical with respect to the 0V reference level. At this time, there is a different voltage stored in C114-C115 from that stored in C116-C117. This difference will be accentuated, becaused one phase detector is sampling the upward going slope of the 30 Hz REF signal and the other is sampling the downward going slope of the 30 Hz REF signal.

4-7. The voltages stored in C114 & C115 and in C116 & C117 are amplified by X107B and X108B (72558) and applied to the terminals of the meter. The TO-FROM balance of the system maybe adjusted by R147, with the +11V SWITCHED off. The electrical balance of the inputs to the meter may be set, with the +11V SWITCHED off, by R153. This is due to the fact that the +5.5V d.c. on the input of X110B pin 6 produces identical outputs from the phase detector gates during adjustment.

5-1. +11 V & 5.5V Regulator Operation.

5-2. The +12V supply voltage is applied to a +11V regulator consisting of X105 (72741L), CR106 (IN283), Q105 (2N3251A) and associated components. Op amp voltage comparitor X105 compares the output voltage at the collector of Q105, as seen through a voltage divider network R129, R127 & R128; to the 6.2V developed by the zener diode CR106. If a difference in voltage exists on X105 pins 2 & 3, an error voltage is generated on X105 pin 6 which changes the bias on the base of Q106. Q106 regulates the +11V output. The +11V regulated output may be manually adjusted by trimpot R128 for the desired output voltage.

5-3. The 5.5V supply is regulated by X104B(72558). X104B pin 3 is referenced to 5.5V by voltage divider R163 & R164, connected to the regulated +11V STEADY line. X104B pin 2 monitors the 5.5V line voltage. This voltage is compared to the 5.5V on pin 3 in order to regulate the 5.5V line.

6-1. Annunicator Circuitry Operation.

6-2. The annunicator circuitry receives a negative going pulse of short duration from the Frequency Control board, when channeling takes place, and produces the tone used to drive the Annunicator Speaker. The input pulse from the Frequency Control Board biases Q108 (2N3251A) to turn ON. With Q108 ON, a low impedance path across C122 is provided. This allows it to discharge and causes the collector of Q109 (2N2222) to go high while C122 is charging. At this time, the signal generated by UJT oscillator Q106 (2N2646) and associated circuitry passes through buffer transistor Q107 (2N2222). This signal is gated through Q109 to the base of Q110 (2N2222). Transistor amplifier Q110 drives the Annunicator Speaker until C122 charges. When C122 charges the collector of Q109 goes low and the tone from the oscillator is cut off.

BEARING CORRECTOR CIRCUIT THEORY OF OPERATION

(NAV-750/A/B)

3-16-0370

1-1. Introduction.

1-2. The Bearing Corrector Circuit, installed at manufacturer's option, is used to correct the 30 Hz VAR signal at bearings of 0, 90, 180 and 270 degrees. This circuit may be mounted on the Bearing Check Board (PC-1) or supplied as an integral part of the Bearing Check Board.

2-1. 90° TO-FROM Operation.

2-2. The 30 Hz REF and 30 VAR signals are inputted to the Bearing Corrector Circuit from the 30 Hz Sine Board (PC-2). The 30 Hz VAR signal is inverted by op amp X5A (TL084CN). This signal is combined with the bearing corrector signals, from R19, R46, R18 and R47, at X5B pin 6 (TL084CN). This combined signal is inverted by X5B and outputted to the Tone Summation Board (PC-3). C13 is used to remove any d.c. offset voltage present on R45, R17, R44, and R16.

2-3. The 30 Hz REF signal is retarded 90° by X6A (TL084CN) and associated components. The output of X6A is sliced into a square-wave signal with a 50% duty cycle by X4 (CA3130). R37, R36, and C11 are used to remove any d.c. level from X6A pin 1. The ouput of X4 is applied to X3C pin 6 (CD4066) and, via inverter X1B (CD4011), X3D pin 12. Because of X1B, when X3C is open; X3D is closed. Also, when X3C is closed; X3D is open.

2-4. X3C and X3D are used to intermittantly switch the 30 Hz VAR signal to ground. At a bearing of 0°, the 30 Hz VAR and the 30 Hz REF signals are in phase. Because the output of X6A is retarded 90°, the 30 Hz VAR signal is shunted to ground at a time when the absolute amplitude of the 30 Hz VAR signal is greatest. This eliminates the input signal to X5C pin 10 (TL084CN). As the bearing is increased (or decreased) from 0°, the overlap between the times X3C and X3D are closed and the maximum amplitude of the signal on R24 decreases. This causes the signal input at X5C pin 10 to increase as the bearing is shifted away from 0°. The input signal reaches a maximum at bearings of 90 and 270 degrees. The amplitude of the signal at X5C pin 10 varies with the sine of the bearing angle. For example: if a bearing of 45° is selected, the input of X5C pin 10 will be 0.707 of the maximum input signal.

2-5. The output of X5C is again retarded 90° by R21 and C9. This signal is then summed with the 30 Hz REF signal through summing resistors R21 and R29. The phase-shifted output of X5C is also summed with an inverted 30 Hz REF output from X5D pin 14 (TL084CN) through R6 and R20.

2-6. When a bearing of 90° FROM is selected on the NAV-750, the retarded signal from R21 & C9 is in phase with the 30 Hz REF signal and is 180° out of phase with the inverted 30 Hz REF signal. This cancels out the inverted 30 Hz REF signal and allows only X7A & X7B (TL084CN) to apply a bearing corrector signal to the 30 Hz VAR signal at X5B pin 6. Phase Shift is applied to X7A & X7B by R47, in order to slew the bearing corrector signal the amount desired.

2-7. When a bearing of 90° TO is selected on the NAV-750, the output of R21 & C9 cancels out the 30 Hz REF signal. This allows only X7C & X7D (TL084CN) to apply a bearing corrector signal to the 30 Hz VAR signal at X5B pin 6. Phase shift is applied to X7C & X7D by R18 in order to slew the bearing corrector signal the amount desired.

3-1. 0° TO-FROM Operation.

3-2. The 30 Hz REF signal is sliced into a square-wave with a 50% duty cycle by X2 (CA3130). This square-wave is applied to a synchronous filter consisting of X1A (CD4011) X3A, X3B (CD4066), C7 & C7. Maximum 30 Hz VAR signal is inputted into X6C (TL084CN) when a bearing of 0 or 180 degrees is selected. As the bearing of the NAV-750 is increased (or decreased) from 0°, the overlap between the times X3A or X3B is closed during minimum absolute amplitude of the 30 Hz VAR signal decreases. This causes the signal input to X6C to reach minimum at bearings of 90 and 180 degrees. The amplitude of the signal at X6C pin 10 varies with the cosine of the bearing selected. For example: if a bearing of 45° is selected, the input to X6C pin 10 is 0.707 of the maximum input signal.

3-3. The output of X6C is retarded 90° by R8 and C10. This signal is summed with the 30 Hz REF signal that has already been retarded 90° by X6A through R9 and R28. The output of X6A is inverted by X6D (TL084CN) and summed with the phase-shifted output of X6C through R25 and R9.

BEARING CORRECTOR CIRCUIT THEORY OF OPERATION

3-4. When a bearing of 0° FROM is selected on the NAV-750, the retarded signal from R8 & C10 is in phase with the output of X6A and is 180° out of phase with the output of X6D. This cancels out the output of X6D and allows only X8C & X8D (TL084CN) to apply a bearing corrector signal to the 30 Hz VAR signal at X5B pin 6. Phase shift is applied to X8C & X8D by R19 in order to slew the bearing corrector signal the amount desired.

3-5. When a bearing of 0° TO is selected on the NAV-750, the output of R8 and C10 cancels out the output of X6A, as seen through R25, and allows only X8A and X8B (TL084CN) to apply a bearing corrector signal to the 30 Hz VAR signal at X5B pin 6. Phase shift is applied to X8A & X8B, by controlling the feedback, by R46. This is done in order to slew the bearing corrector signal the amount desired.

3-6. The bearing corrector pots allow adjustment of the 30 Hz VAR signal by amounts of about 0.05 degrees. Each corrector circuit operates independantly only at the bearing it corrects. For example: at a bearing of 0° TO, the 0° TO pot R46 should provide an adjustment of ±0.05°. Other pots should affect the bearing, at 0 degrees TO, by a maximum of 0.01 degree. But, at a bearing of 45° TO the bearing correction signal is a combination of the 90° TO correction signal and the 0° TO signal.

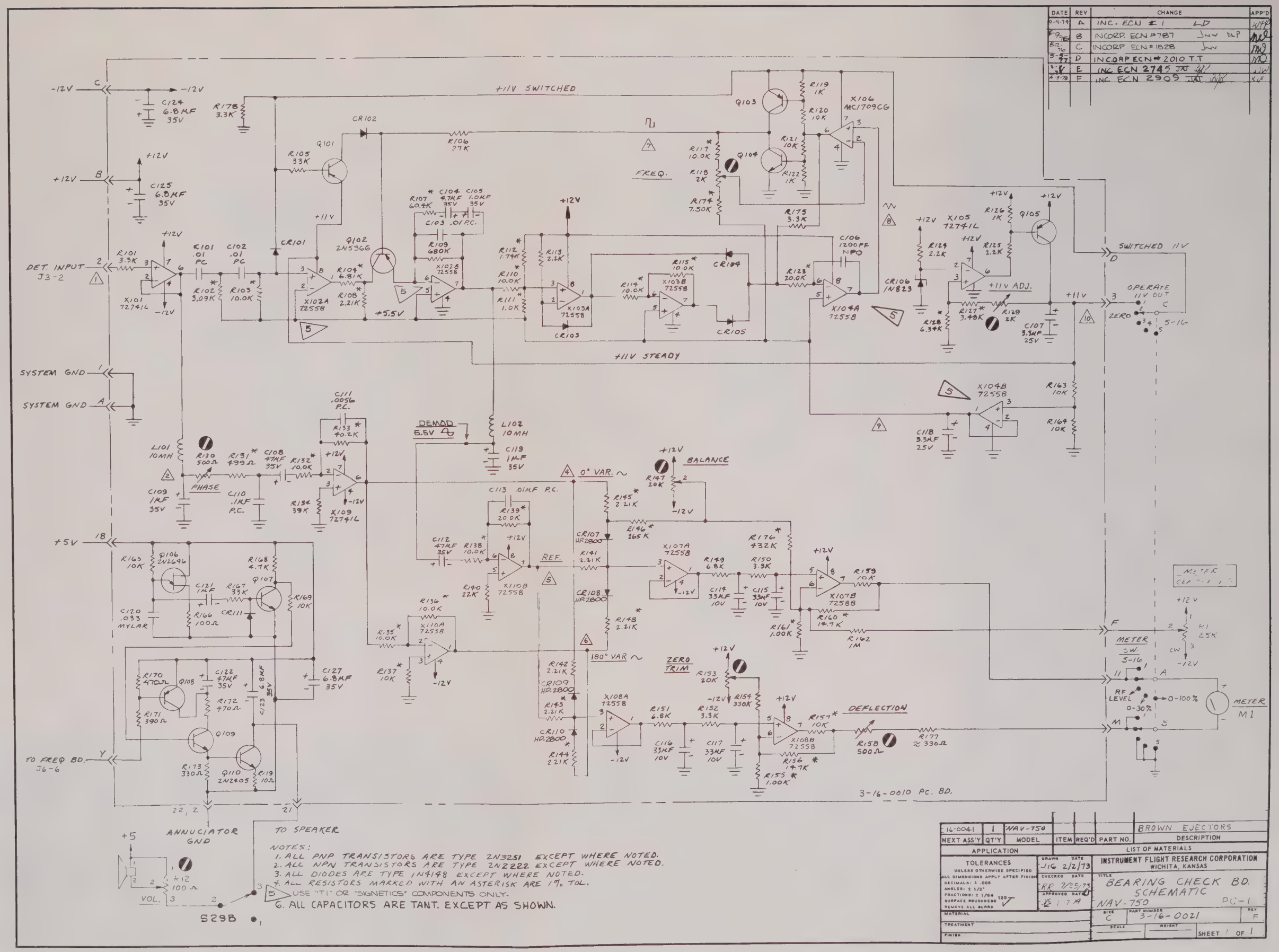
DATE | REV | CHANGE | APP'D
9-4-79 | A | INC. ECN #1 LD
8-12-76 | B | INCORP. ECN #787 JNW DLP
8-12-76 | C | INCORP ECN #1528 JNW
5-5-77 | D | INCORP ECN #2010 T.T
3-5-78 | E | INC ECN 2745 JAT
4-5-78 | F | INC. ECN 2909 JAT
+11V SWITCHED
+11V STEADY
DET. INPUT J3-2
SYSTEM GND
SYSTEM GND
FREQ.
SWITCHED 11V
OPERATE 11V OUT
ZERO
+11V ADJ.
DEMOD 5.5V
PHASE
0° VAR.
BALANCE
REF.
180° VAR
ZERO TRIM
DEFLECTION
METER SW. S-16
RF LEVEL
0-100%
0-30%
METER M1
TO FREQ BD. J6-6
ANNUNCIATOR GND
TO SPEAKER
VOL.
S29B
3-16-0010 PC. BD.
NOTES:
1. ALL PNP TRANSISTORS ARE TYPE 2N3251 EXCEPT WHERE NOTED.
2. ALL NPN TRANSISTORS ARE TYPE 2N2222 EXCEPT WHERE NOTED.
3. ALL DIODES ARE TYPE 1N4148 EXCEPT WHERE NOTED.
4. ALL RESISTORS MARKED WITH AN ASTERISK ARE 1% TOL.
5. USE "TI" OR "SIGNETICS" COMPONENTS ONLY.
6. ALL CAPACITORS ARE TANT. EXCEPT AS SHOWN.
16-0041 | 1 | NAV-750 | BROWN EJECTORS
NEXT ASS'Y | QT'Y | MODEL | ITEM | REQ'D | PART NO. | DESCRIPTION
APPLICATION | LIST OF MATERIALS
TOLERANCES
UNLESS OTHERWISE SPECIFIED
ALL DIMENSIONS APPLY AFTER FINISH
DECIMALS: ± .005
ANGLES: ± 1/2°
FRACTIONS: ± 1/64
SURFACE ROUGHNESS 125
REMOVE ALL BURRS
DRAWN J16 DATE 2/2/73
CHECKED KR DATE 7/25/73
APPROVED DATE
INSTRUMENT FLIGHT RESEARCH CORPORATION
WICHITA, KANSAS
TITLE BEARING CHECK BD. SCHEMATIC
NAV-750 PC-1
SIZE C
PART NUMBER 3-16-0021
REV F
SCALE
WEIGHT
SHEET 1 OF 1
MATERIAL
TREATMENT
FINISH

Fig. 8-10-1

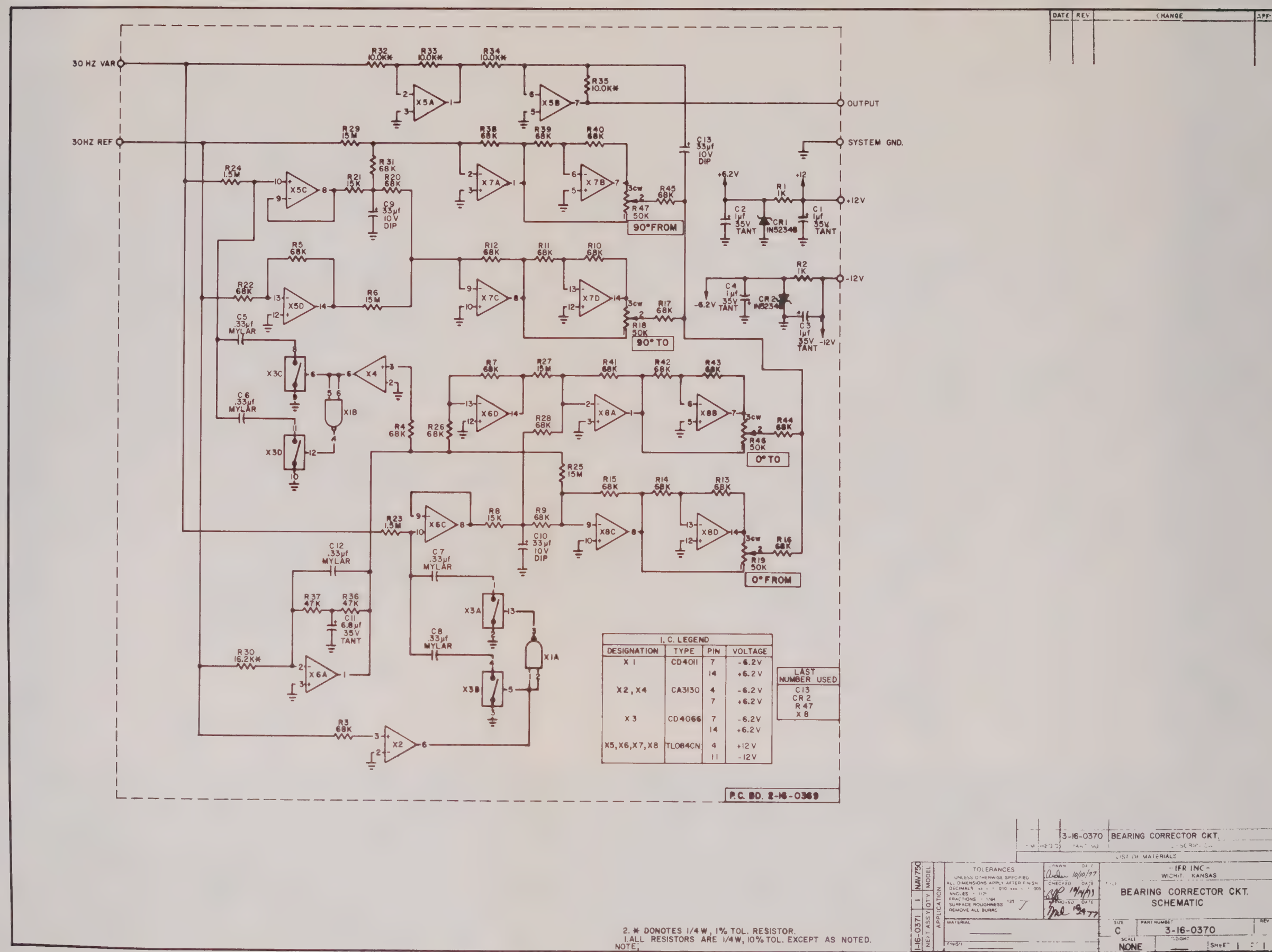
30 HZ VAR
30HZ REF
OUTPUT
SYSTEM GND.
+12V
-12V
90° FROM
90° TO
0° TO
0° FROM
P.C. BD. 2-16-0369
I. C. LEGEND
DESIGNATION | TYPE | PIN | VOLTAGE
X 1 | CD4011 | 7 | -6.2V
14 | +6.2V
X2, X4 | CA3130 | 4 | -6.2V
7 | +6.2V
X 3 | CD4066 | 7 | -6.2V
14 | +6.2V
X5, X6, X7, X8 | TL084CN | 4 | +12V
11 | -12V
LAST NUMBER USED
C13
CR 2
R 47
X 8
2. * DONOTES 1/4 W, 1% TOL. RESISTOR.
1. ALL RESISTORS ARE 1/4W, 10% TOL. EXCEPT AS NOTED.
NOTE;
3-16-0370 BEARING CORRECTOR CKT.
LIST OF MATERIALS
TOLERANCES
UNLESS OTHERWISE SPECIFIED
ALL DIMENSIONS APPLY AFTER FINISH
DECIMALS
ANGLES
FRACTIONS
SURFACE ROUGHNESS
REMOVE ALL BURRS
MATERIAL
FINISH
DRAWN 10/10/77
CHECKED 10/14/77
APPROVED 10/24/77
-IFR INC-
WICHITA, KANSAS
BEARING CORRECTOR CKT.
SCHEMATIC
SIZE C
PART NUMBER 3-16-0370
SCALE NONE
SHEET 1 OF 1
1-16-0371 1 NAV750
NEXT ASSY QTY MODEL
APPLICATION

8-24 Fig. 8-10-2

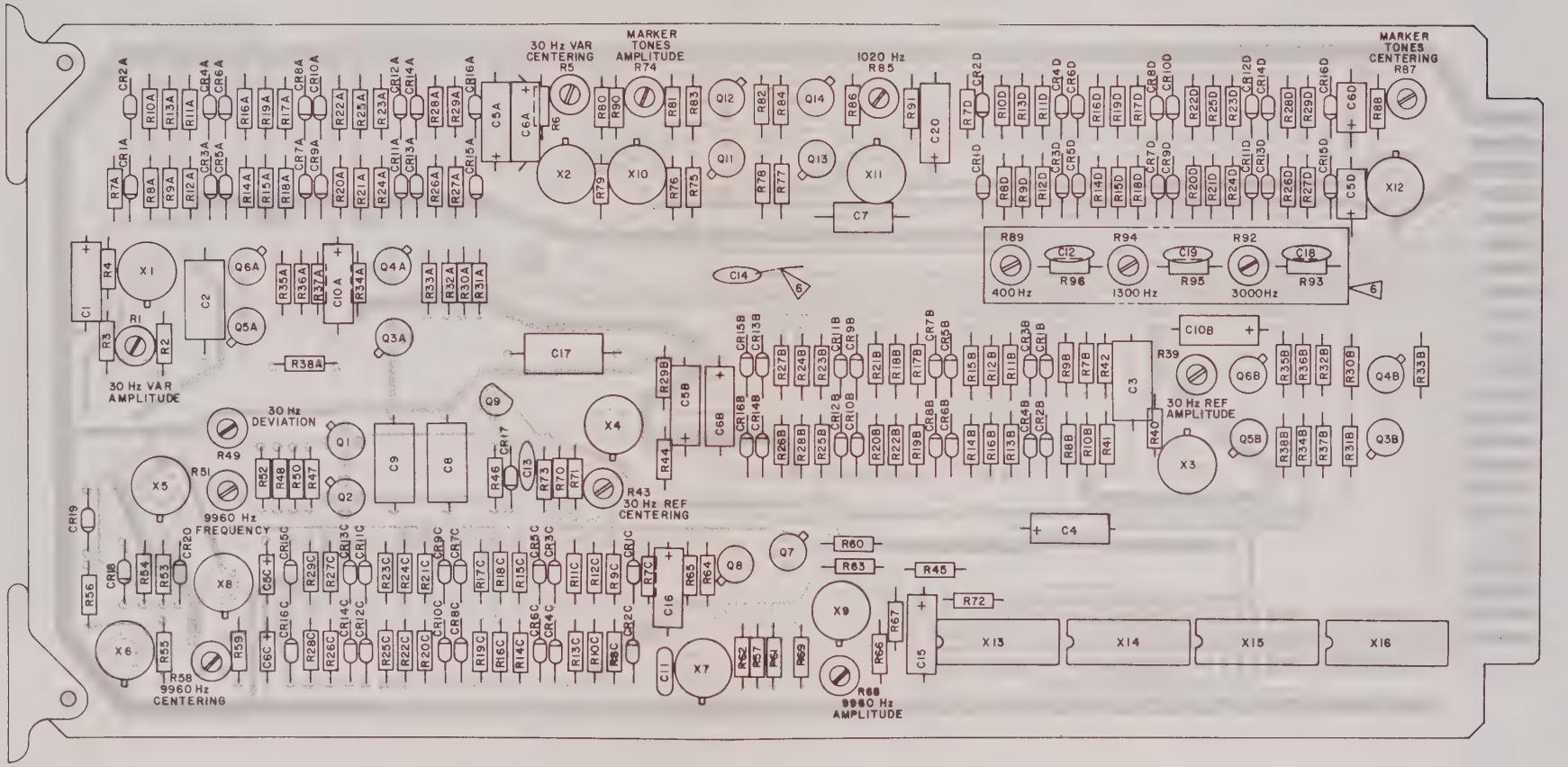

6 Create P/N 1-16-0027 Assembly For NAV-750/A by Eliminating Designated Components And Adding Designated NO. 22-26 AWG Wire Jumper on Bottom of Board.

FIG. 8-11 30 Hz SINE BOARD PARTS LAYOUT NAV-750/A/B

30 Hz SINE BOARD THEORY OF OPERATION

(NAV-750B)

4-16-0290

1-1. Introduction.

1-2. The 30 Hz Sine Board (PC-2) processes the 30 Hz variable and the 30 Hz reference signals from the Bearing Logic Board (PC-4). The 30 Hz Sine Board also produces the 9960 Hz tone and the Marker tones.

2-1. Square Wave Driver Circuit (Typ.).

2-2. The Square-Wave Driver Circuit inputs a 5V, TTL level signal. This signal is buffered by a driver circuit, consisting of Q2003 & Q2004, to switch Q2005 (2N2222) and Q2006 (2N3251A) in a complimentary fashion. Q2006 is biased ON when Q2005 is biased OFF and Q2006 is biased OFF when Q2005 is biased ON. This causes the output of the transistors to effectively slap between the power supply voltages producing a ±11V square-wave output.

3-1. Sine Synthesizer Circuit (Typ.).

3-2. The typical sine synthesizer circuit is a series of diode switches and resistor networks. The diodes are reverse biased at successively higher voltages. As the voltage of the triangle-wave ramp input increases each successive odd-numbered diode becomes forward biased which increases the load on the input resistor R2007, decreasing the output level. The output of the synthesizer thus approximates a sine-wave. The even-numbered diodes operate in a like manner during the negative portion of the input signal.

4-1. 30 Hz VAR Processing.

4-2. The 30 Hz VAR signal is inputted on pin 9 of PC-2. This signal is sent through Square-Wave Driver (A). The output of SWD(A) is amplitude adjusted by R2001 and is sent to an op amp integrator circuit X2001 (72741) which produces a triangle-wave output on X2001 pin 6. This triangle-wave is of the same frequency as the signal on PC-2 pin 9. This signal is converted to a sine-wave by Sine Circuit (A). A d.c. offset centering voltage is applied by R2005 & R2006. The offset sine-wave is buffered by X2002 (72741). The output from X2002 pin 6 is sent to the 30 Hz VAR OUTPUT Jack on the Rear Panel and to the Tone Summation Board, PC-3.

5-1. 30 Hz REF Processing.

5-2. 30 Hz REF processing is the same as that for the 30 Hz VAR signal except that the processed 30 Hz REF signal is used to frequency modulate and provide a phase-lock reference signal for the 9960 Hz tone.

6-1. 9960 Hz Tone Generation.

6-2. The 9960 Hz oscillator consists of op amp integrator X2007 (72741) and op amp comparator X2009 (72709). The output of X2007 is a triangle-wave. This triangle-wave is converted to a sine-wave by Sine Circuit (C) and given a d.c. offset centering voltage by R2059 & R2058. The offset sine-wave is buffered by X2008 (72741) then sent to the 9960 Hz OUTPUT Jack on the Rear Panel and to the Tone Summation Board, PC-3.

6-3. The output of X2009 is a square-wave whose amplitude is controlled by R2069 & R2068. The square-wave is slapped between ±11V by complimentary transistor drivers Q2007 (2N3251A) and Q2008 (2N2222). This is applied to the input of the divide-by-332 circuit X2013-X2016 through a voltage divider.

6-4. The divide-by-332 circuit consists of two divide-by-16 binary up-counters X2013 & X2014 (7493), and divide-by-2 flip-flop X2015 (7473). One clock pulse occurs at X2014 pin 11 for every 128 pulses on X2013 pin 14. This pulse on X2014 pin 11 toggles X2015. The Q output of X2015 pin 12 will go high once for every 256 pulses on X2013 pin 14. X2013 & X2014 continue counting for 76 more pulses on X2013 pin 14 until, X2014 pin 8 and X2013 pins 8 & 11 go high. At this time; pins 10, 9, 12, & 13 of X2016B (7420) are high. The output of X2016 now goes low and resets X2015. This low state is inverted by X2016A which pulls pins 2, 3, & 7 of X2013 & X2014 up. This resets X2013 & X2014 to a count of zero. The divide-by-332 circuit produces the 30 Hz sampling rate for the phase lock circuit from X2015 pin 12.

6-5. The 30 Hz sampling rate clock is converted into positive going spike pulses by C2013 and Q2009 (2N3646). These pulses are used as the sampling gate input to the phase detector Q2001 (74223).

6-6. The output of Q2001 is a d.c. frequency corrector voltage. This voltage is proportional to the phase of the 9960 Hz oscillator, with respect to the 30 Hz reference tone, at the time of the sampling. The frequency corrector voltage is stored by C2008 & C2009. Q2002 is used as a high input impedance, low output impedance buffer to retard discharge of the storage capacitors between samplings.

6-7. The frequency corrector voltage is applied to X2005 (72741) pin 2. The voltage at X2005 pin 2 controls the frequency of the 9960 Hz oscillator. R20251 is a voltage divider provides a coarse adjustment of the voltage at X2005 pin 2, so that the 9960 Hz tone will phase-lock.

6-8. The frequency of the 9960 Hz oscillator is dependent upon the voltage at X2005 pin 6. The 30 Hz Reference signal causes the signal at X2005 pin 6 to vary to 30 Hz. This is buffered by X2006 (72741) to provide frequency correction and 30 Hz frequency modulation to the 9960 Hz oscillator.

7-1. Marker Tone Generation.

7-2. The 3000, 1300, & 400 Hz Marker tones and the 1020 Hz Ident tone are formed by an oscillator consisting of Q2010 (72709), X2011 (72741), and transistors Q2011-Q2014. The desired Marker tone frequency is selected by the METER FUNCTION and TONE SELECTOR SWITCH, S-16, on the Front Panel. Frequency adjustments for the tones are provided by R2094, R2092, R2089 & R2085. The square-wave output of the oscillator is converted by op amp integrator X2001 (72741) whose output is a triangle-wave. The output of the integrator is applied to op amp comparator X2010 pin 2. The amplitude of the oscillator is controlled by adjusting the feedback to X2010 via R2074. The output on X2011 pin 6 is also applied to sine synthesizer circuit (D) whose output has a d.c. offset voltage applied by R2088 & R2087. This signal is then buffered for output by X2010 (72741).

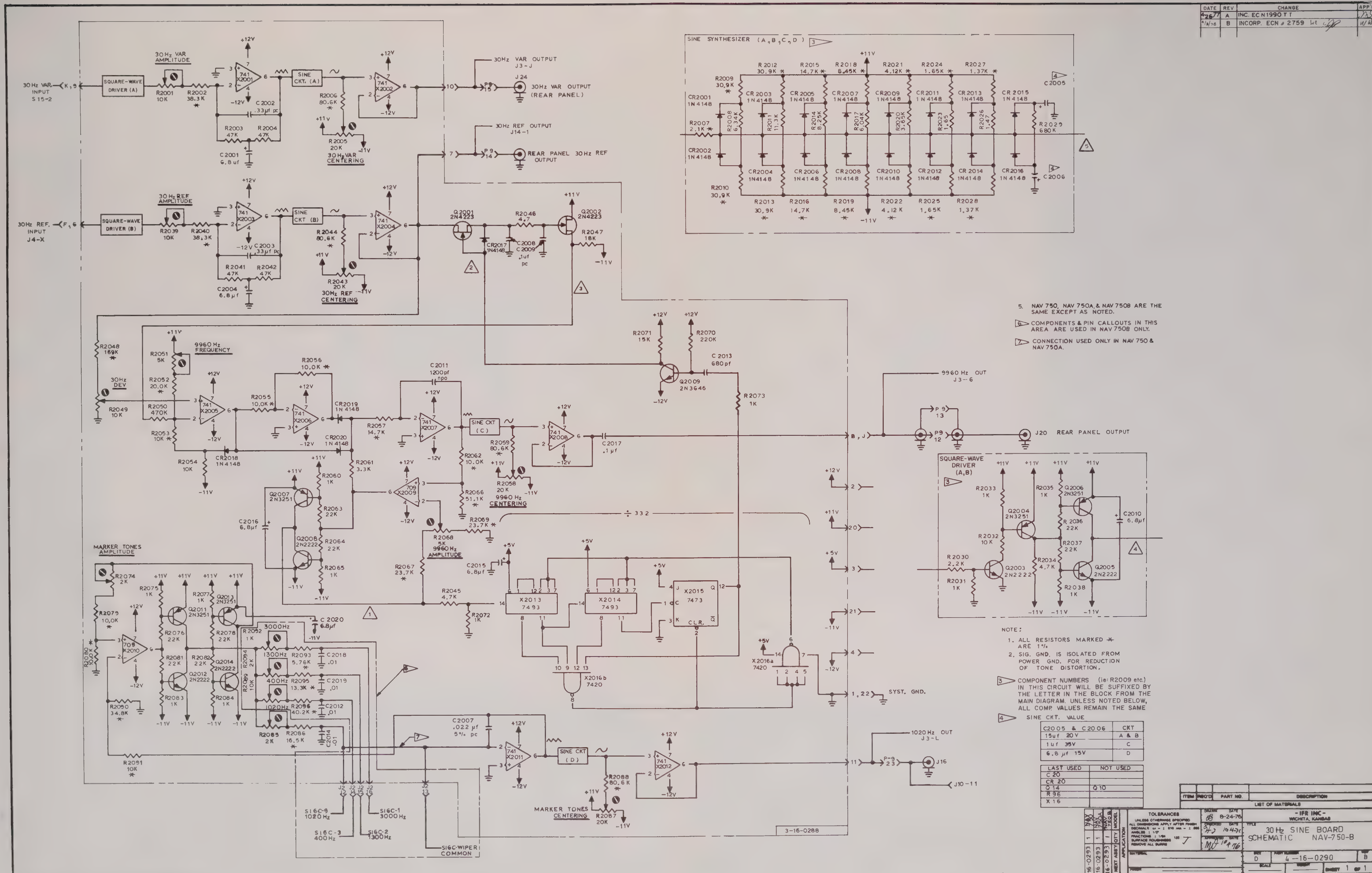

30 Hz SINE BOARD SCHEMATIC NAV-750-B
4-16-0290
IFR INC - WICHITA, KANSAS
DATE | REV | CHANGE
A | INC. ECN 1990 TT
B | INCORP. ECN # 2759
SINE SYNTHESIZER (A, B, C, D)
5. NAV 750, NAV 750A, & NAV 750B ARE THE SAME EXCEPT AS NOTED.
6 COMPONENTS & PIN CALLOUTS IN THIS AREA ARE USED IN NAV 750B ONLY.
7 CONNECTION USED ONLY IN NAV 750 & NAV 750A.
NOTE:
1. ALL RESISTORS MARKED * ARE 1%
2. SIG. GND. IS ISOLATED FROM POWER GND. FOR REDUCTION OF TONE DISTORTION.
3 COMPONENT NUMBERS (ie: R2009 etc) IN THIS CIRCUIT WILL BE SUFFIXED BY THE LETTER IN THE BLOCK FROM THE MAIN DIAGRAM. UNLESS NOTED BELOW, ALL COMP. VALUES REMAIN THE SAME
4 SINE CKT. VALUE
C2005 & C2006 | CKT
15uf 20V | A & B
1uf 35V | C
6.8 µf 15V | D
LAST USED | NOT USED
C 20 |
CR 20 |
Q 14 | Q 10
R 96 |
X 16 |
30 Hz VAR INPUT S15-2
30 Hz REF. INPUT J4-X
30 Hz VAR OUTPUT J3-J
30 Hz VAR OUTPUT (REAR PANEL)
30 Hz REF OUTPUT J14-1
REAR PANEL 30 Hz REF OUTPUT
9960 Hz OUT J3-6
J20 REAR PANEL OUTPUT
1020 Hz OUT J3-L
SYST. GND.
MARKER TONES AMPLITUDE
MARKER TONES CENTERING
9960 Hz FREQUENCY
9960 Hz CENTERING
9960 Hz AMPLITUDE
30 Hz DEV
SQUARE-WAVE DRIVER (A,B)
3-16-0288

Fig. 8-12

DATE	REV	CHANGE	APP'D
		SEE SHT 1 of 2	

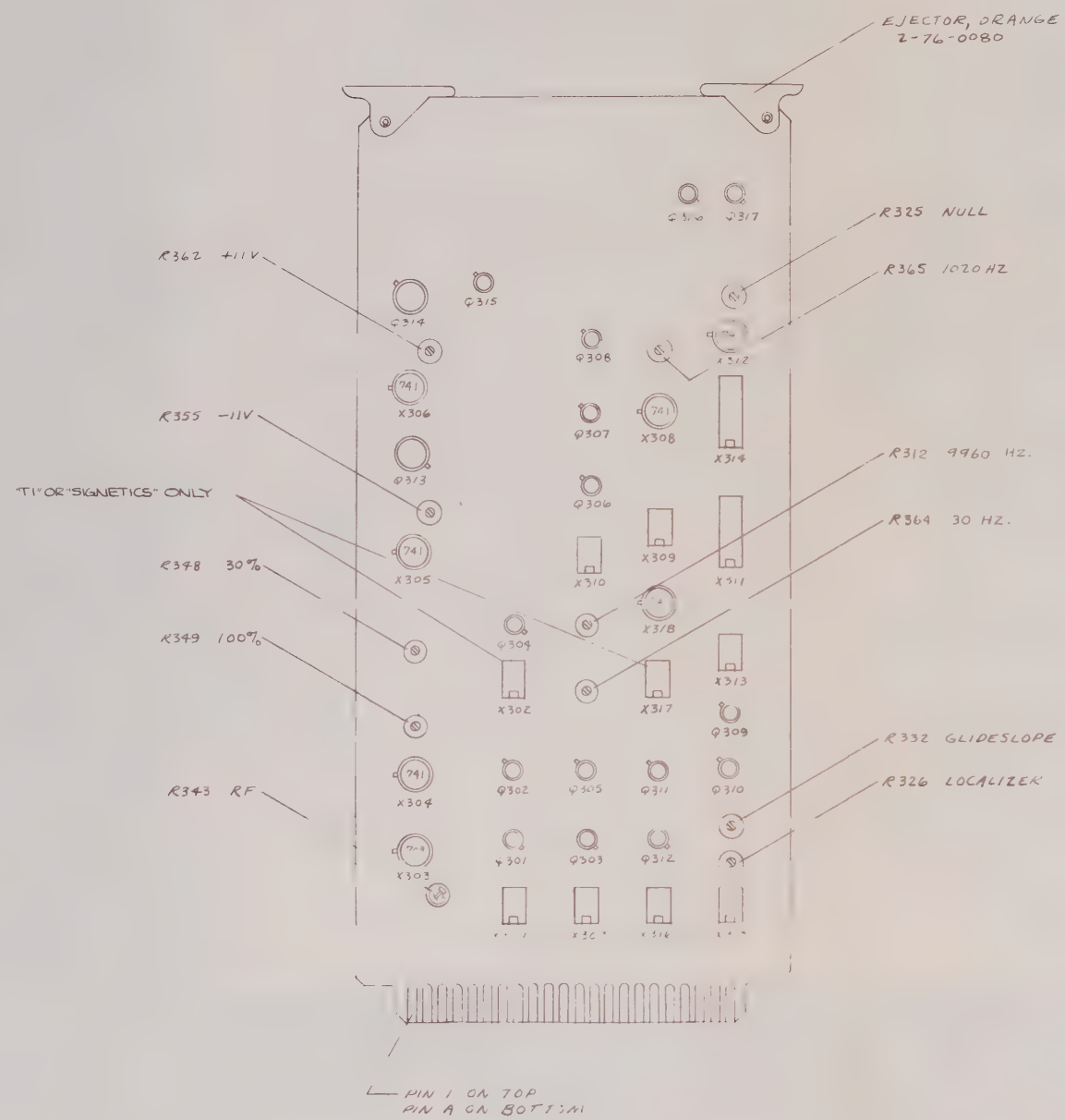

1	GND	12	
A	-11V OUT	N	-20 V IN
2	FROM DET.	13	30 HZ VAR POT WIPER
B	+12V IN	P	
3	RF LEVEL	14	MASTER GAIN LAMP SW
C	-12V IN	R	
4	VOR LIGHT	15	MASTER GAIN POT WIPER
D	+11V OUT	S	MASTER GAIN
5	0-30 %	16	
E	0-100 %	T	
6	9960 HZ INPUT	17	LOCALIZER LAMP
F	+12V	U	1020 HZ LAMP SW
7	EXT. MOD INPUT	18	TO MODULATOR
H		V	TONES OUTPUT
8	9960 HZ LAMP SW.	19	GS-LOC (GND GS)
J	30 HZ VAR INPUT	W	GLIDE SLOPE LAMP
9	9960 HZ POT WIPER	20	UP COMM ONLY
K		X	200 MC LINE
10	1020 HZ POT WIPER	21	LOCALIZER DEV. SWITCHES
L	1020 HZ INPUT	Y	GLIDE SLOPE DEV. SWITCHES
11	30HZ VAR LAMP SW.	22	GND
M		Z	+5V IN

NEXT ASS'Y	QT'Y	MODEL	ITEM	REQ'D	PART NO.	DESCRIPTION
3-16-0028	1	NAV-750				ORANGE EJECTORS

APPLICATION — LIST OF MATERIALS

TOLERANCES UNLESS OTHERWISE SPECIFIED
ALL DIMENSIONS APPLY AFTER FINISH
DECIMALS: ± .005
ANGLES: ± 1/2°
FRACTIONS: ± 1/64
SURFACE ROUGHNESS 125
REMOVE ALL BURRS

DRAWN JIG DATE 1-18-73
CHECKED KK DATE 7/25
APPROVED DATE 1-17-74

INSTRUMENT FLIGHT RESEARCH CORPORATION
WICHITA, KANSAS

TITLE: TONE SUMMATION BD MECH LAYOUT NAV-750

MATERIAL
TREATMENT
FINISH

SIZE C — PART NUMBER 3-16-0020 — REV H
SCALE 1:1 — WEIGHT — SHEET 2 OF 2

Fig. 8-13

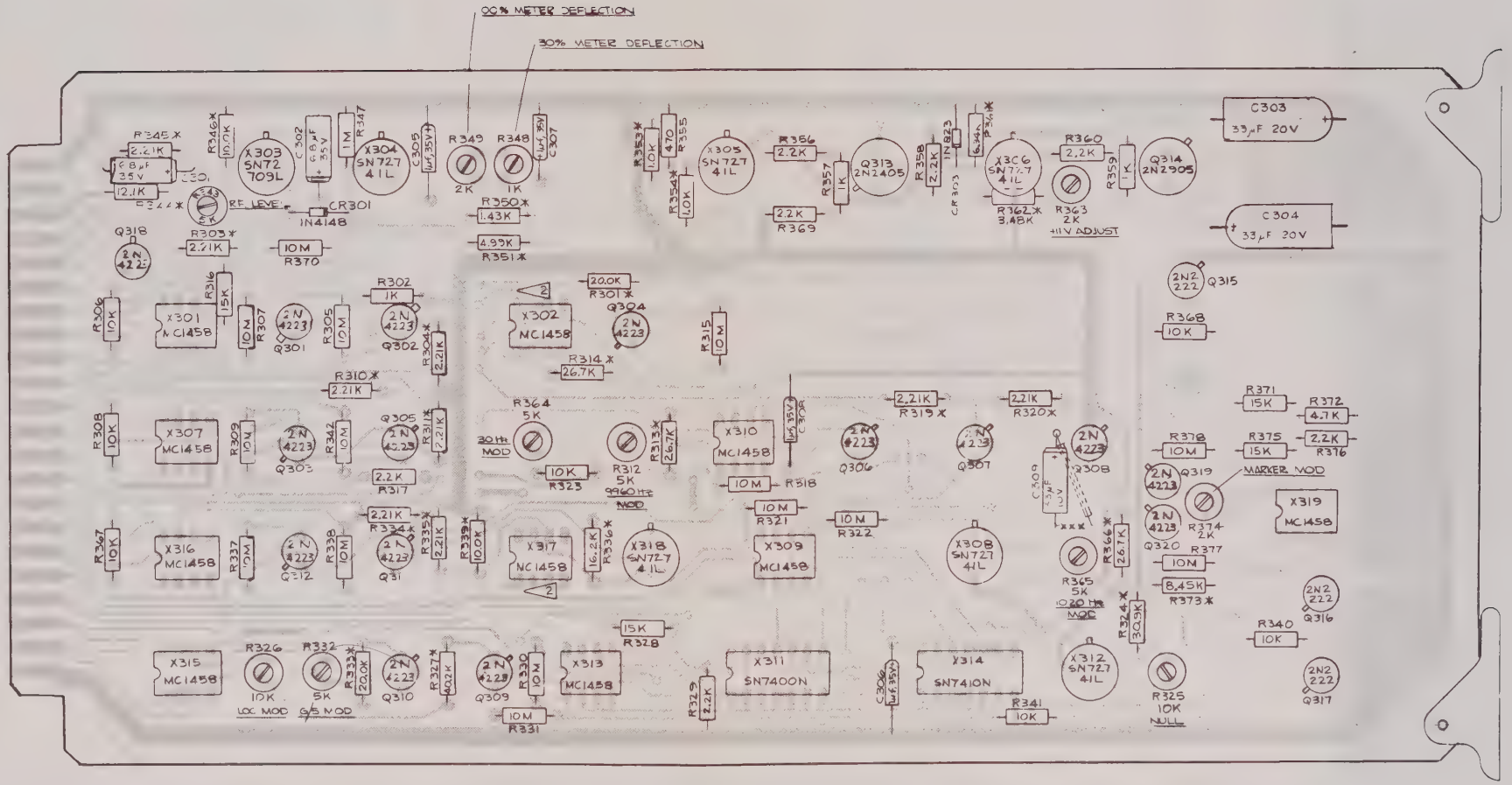

Fig. 8-14. TONE SUMMATION BOARD PARTS LAYOUT (NAV-750B)

TONE SUMMATION BOARD THEORY OF OPERATION

(NAV-750B)

4-16-0298

1-1. Introduction.

1-2. The Tone Summation Board (PC-3) provides VOR, LOCALIZER, COMM, GLIDE SLOPE, and MASTER, modulation to the Mod Amp. In addition, PC-3 provides the ±11V used on the 30 Hz Sine Board (PC-2), and biasing for the Meter Function Switch.

2-1. VOR Modulation.

2-2. The 9960 Hz VOR modulation signal enters the Tone Summation Board on pin 6 or on pin 9, depending upon the position of the 9960 Hz TONE MODULATION LEVEL CONTROL. With the 9960 Hz TONE MODULATION LEVEL CONTROL in the UNCAL position, S20 is closed. This pulls pins 2 & 5 of voltage comparators X301A & X301B (SN1458) to ground. The non-inverting (+) input of X301A and the inverting (-) input of X301B are biased to approximately 1.2V by R316 and R317. A negative voltage on X301B pin 7 turns FET switch Q302 (74223) OFF. This blocks the 9960 Hz input from PC-3 pin 6. X301 pin 1 is positive, turning on FET switch Q301 ON. With Q301 ON, the 9960 Hz input from PC-3 pin 9 is gated op amp buffer X302B pin 5. The level of the 9960 Hz input signal is now controlled by the 9960 Hz TONE MODULATION LEVEL CONTROL on the Front Panel.

2-3. With the 9960 Hz TONE MODULATION LEVEL CONTROL in the detent, CAL, position; S20 is open. Pins 2 & 5 of X301 are pulled towards +12V by pull-up resistor R306. The output of X301A on pin 1 is negative. This turns OFF Q301 and blocks the 9960 Hz input from PC-3 pin 9. The output of X301B is positive and turns Q302 ON. This allows the 9960 Hz modulation from voltage divider R303, & R304 to be applied to the input of op amp buffer X302 at half the original level.

2-4. With the 9960 Hz TONE MODULATION LEVEL CONTROL in the UNCAL position, S20 is closed. At this time, the cathode of LED L3 is pulled to ground, lighting L3. With the control in the CAL, detent, position S20 is open. This allows the cathode of LED L3 to be pulled toward +12V by pull-up resistor R306, turning L3 OFF.

2-5. The 30 Hz VAR MODULATION CONTROL operation is the same as for the 9960 Hz MODULATION CONTROL. X302A acts as the op amp buffer.

2-6. The outputs of buffers X302A and X302B are summed through feedback resistors (R312 & R313 for 9960 Hz, and R364 & R314 for 30 Hz VAR) to the input of FET switch Q304 (2N4223). FET switches Q304 and Q318 (2N4223) are controlled by voltage comparator X301B and associated logic. They allow VOR modulation to reach the summing amp X312 (SN72741L) unless, LOC, G/S, or COMM modulation mode switching causes a low level to be present on quad-input NAND gate, X431A (7410) pins 1, 2, or 13. If a low level exists on any of these pins, the gates of FET switches Q304 & Q318 receive a negative voltage bias and are turned OFF. The 9960 Hz and the 30 Hz VAR signals are blocked from reaching the summing amp X312.

3-1. 1020 Hz COMM and Marker Beacon Modulation.

3-2. Operation ofthe 1020 Hz COMM MODULATION CONTROL is similar to the VOR MODULATION CONTROL. Op amp X309A, X309B & X310A (SN145B) act as the voltage comparaitors and switching logic for FET switches Q307, Q308, and Q306 (2N4223). Q308 is added at the input to op amp buffer X308 to shunt the 1020 Hz modulation input to ground when the set is not in the COMM mode and the 1020 Hz COMM MODULATION CONTROL is in the detent, CAL., position. The output of Q308 is connected to op amp buffer X308 (72741).

3-3. When a COMM frequency is selected, the 100 MHz signal line, PC-3 pin 11 and voltage comparator X319 (SN1458) pins 3 & 6 are low. This causes X319B pin 7 to go low, turning OFF FET switch Q319 (2N4223). At this time, pin 1 of X319A is high and turns ON FET switch Q320 (2N4223). With Q320 ON, the 1020 Hz signal is applied to the COMM Modulation Adjustment Pot R365. The 1020 Hz signal is then adjusted for a 30% modulation level in the COMM frequencies. C309 is used to eliminate any d.c. offset voltage present on the line.

3-4. When a Marker frequency is selected, the 100 MHz signal line, and X319 pins 3 & 4 are high. This causes X319A pin 1 to go low and turns OFF FET switch Q320. At this time X319B pins 5 & 6 are high. This causes X319B pin 7 to be high. This turns ON FET switch Q319 and applies the 1020 Hz signal to the Marker Modulation Adjustment Pot R374. The 1020 Hz signal is adjusted for a 95% modulation level in the Marker frequencies. The 1020 Hz modulation from R366 or R373 is applied directly to the input of the summing amplifier X312 (72741L).

4-1. Localizer Modulation

4-2. Localizer modulation is inputted on PC-3 pin 21 and is applied to op amp buffer X315B (SN1458). The output of the buffer is applied to summing amplifier X312 through FET switch Q309 (2N4223) and a summing resistor R330. The modulation level of the Localizer signal is adjusted by R336. In the Localizer mode of operation, X313B (SN1458) pin 7 is high. X313B pin 7 biases the base of Q316 (2N2222) positive. Q316 is turned ON to supply a ground for the LOCALIZER LIGHT (L7).

5-1. Glide Slope Modulation.

5-2. Glide Slope modulation circuit operation is the same as for the Localizer modulation.

6-1. Glide Slope/Localizer Modulation Switching.

6-2. Glide Slope/Localizer modulation switching is controlled by the status of PC-3 pin 19 and the 200 MHz line. In the Glide Slope mode, the 200 MHz line is up and PC-3 pin 19 is down. The 200 MHz line is inverted by X311B (7400) and is used through voltage comparator X313A to switch Glide Slope modulation FET switch Q309 (2N4223) ON and OFF. In the Glide Slope mode, Q309 is turned ON.

6-3. In the Localizer mode, the 200 MHz line is down and PC-3 pin 19 is up. The signal on PC-3 pin 19 is inverted by X314C (7410). This produces a high on X314B pins 3 & 4. With the 200 MHz line low, X311B pins 4 & 5 are low. X311B pin 6 and X314B pin 5 are high at this time. This causes X314B pin 6 and X313B pin 6 to go low. The output of op amp comparitor X313B pin 7 goes high and turns ON the LOCALIZER LIGHT FET switch Q310 (2N4223). When Q310 is ON, a ground is provided for L7. 3 input NAND gate X341B is used as a logic lockout for the Glide Slope and Localizer modulation.

7-1. Master Mod Operation.

7-2. Adjustable resistors R312, R364, R365, R326 and R322 provide gain control for the summing amplifier X312. R325 is used to eliminate any d.c. offset voltage on the output of X312. The output of X312 is applied to the front panel MASTER MOD CONTROL (R5) and re-enters PC-3 through pin 5 or pin 15, depending upon the setting of the MASTER MOD CONTROL. Master Mod operation is the same as the 9960 Hz modulation circuit, with the exception that, the MASTER MOD output lines to the Mod. Amp. and the TONES OUTPUT Jack on the Rear Panel are individually buffered by X317 (1N4458) and X318 (72741L).

8-1. Meter Circuit.

8-2. The demodulated output d.c. level from the detector is applied to the RF LEVEL position of the meter switch through R343. The demodulated a.c. from the detector is applied to the input of peak-detector X303 (SN72709) through a d.c. blocking capacitor C-301 and a voltage divider R345 & R-346. The output of X303 is buffered by X304 (72741L). The output level of X304 is adjusted by R348 for a meter deflection of 30% of full-scale. R349 is adjusted for a 100% deflection of the full-scale. The outputs of the meter circuit are applied to the METER FUNCTION SWITCH.

9-1. ±11V dc Circuit.

9-2. The plus and minus 11V voltages are generated by X306 (SN7241L), X305 (SN7241L) and associated circuitry. X305 & X306 function as voltage comparators. X306 compares a reference voltage, from R358 and zener diode CR303, of about 6.2 volts to the output voltage as seen through a voltage divider. If a voltage differential exists between pins 2 & 3 of X306, a correction voltage is generated. This correction voltage causes the bias on current-limiting transistor Q314 (2N2905) to change. This biase on Q314 controls the output voltage of the +11V regulator.

9-3. X305 compares the +11V output source voltage, as seen through a voltage divider, with a reference voltage (in this case ground). A correction voltage is generated on X303 pin 6 if any voltage differential between the two exists. This correction voltage causes the bias on current-limiting transistor Q313 (2N2405) to change. Q313 controls the negative output voltage.

DATE	REV	CHANGE	APP'D
3/18/74	A	INCORPORATED ECN#1 JNV	
7-1-74	B	INC. ECN # 2 L.D.	
4-18-74	C	INC. ECN- # 3 L.D.	
11-12-74	D	INC. ECN # 4 L.D.	
6-1-75	E	INCORP ECN # 790 & 946, SSD DLP	
8-1-76	F	INCORP ECN #1527 JNV	
11/8/76	G	INC ECN #1690 RKK WW	
2-9-78	H	INC ECN # 2756 WW	

(REAR PANEL)
EXT. MOD
J18
P9-19
P9-20
9960 ~ SIG IN
J2-8, J
R3 5K
9960 ~
S20
L3 UNCAL
30 ~ VAR IN
J2-10
R2 5K
30 ~
S19
L2 UNCAL
1020 ~ IN
J2-11
R9 5K
1020 ~
S21
L4 UNCAL
MASTER GAIN
R5 5K
MASTER MOD.
S22
L5 UNCAL
R301 20.0K *
R302 1K
X301A 5558
Q301 UC714
X301B 5558
R307 10M
R303 2.21K *
R304 2.21K *
Q302 UC714
R305 10M
R306 10K
X307A 5558
Q303 UC719
X307B 5558
R309 10M
R310 2.21K *
R311 2.21K *
Q305 UC714
R342 10M
R308 10K
X306A 5558
Q306 UC714
X306B 5558
R318 10M
R319 2.21K *
R320 2.21K *
Q307 UC714
R321 10M
R316 15K
R317 2.2K
R369 2.2K
-12V
X316A 5558
Q312 UC714
X316B 5558
R337 10M
R334 2.21K *
R335 2.21K *
Q311 UC714
R338 10M
R367 10K
X302A 5558
9960 ~ MOD
R312 5K
R313 26.7K
X302B 5558
30 ~ MOD
R364 5K
R314 26.7K
Q309 UC714
R315 10M
R368 10K
Q315
-20V
C308 1MF 35V
C307 1MF 35V
X308 7274IL
1020 ~ MOD
R365 5K
R366 26.7K
X309A 5558
X309B 5558
X310A 5558
X310B 7400
X310C 7400
X311A 7400
R323 10K
R324 40.2K *
X312 7274IL
R325 10K NULL
-12V
+24V
L1
VOR LIGHT
RF LEVEL TO METER SW.
J12-4 FROM DET. BRG. CHK. BD J1-2
J23 J29-21 DEMOD. OUTPUT (REAR PANEL)
SYSTEM GND
-5V
+5V
+5V
C301 6.8MF 35V
R343 5K RF LEVEL
R344 12.1K *
R345 2.21K *
R346 10.0K *
X303 72709
CR301
R347 1M
C302 6.8MF 35V
X304 7274IL
30% R348 1K
100% R349 2K
R350 1.43K *
R351 4.99K *
C303 33MF 20V
E 0-100% TO METER SW. S16A-5
5 0-30% TO METER SW. S16A-4
R353 1K *
R354 1K *
R355 470Ω
X305 7274IL
R356 2.2K
R357 1K
Q313 2N2405
A -11V
R358 2.2K
X306 7274IL
R359 1K
R360 2.2K
Q314 2N2905
CR303 IN823
+11V ADJ
R361 6.34K *
R362 3.48K *
R363 2K
C304 33MF 20V
D +11V
X308 5558
X314A 7410
+12V
B,F +12V
N -20V
-20V
19
J6-4 FREQ CONTROL BOARD
C -12V
-12V
DOWN ON COM. ONLY
DOWN ON 200MC
DOWN ON LOC. FREQ'S.
R328 15K
R329 2.2K
X313A 5558
X313B 7410
X313C 7410
X313D 7400
+5V
C306 1MF 35V
+20V
L7
LOCALIZER LIGHT
R340 10K
Q316
X313B 5558
R341 10K
Q317
W GLIDESLOPE LIGHT
+20V
L8
UP COM. ONLY 20 J6-3
200MC LINE X J6-39
TO LOCALIZER DEVIATION SWITCHES S25B-COMMON
21
TO GLIDE SLOPE DEVIATION SWITCHES S26B-COMMON Y
MASTER GAIN 5
15
14
UP COM. ONLY
UP ON 200MC
X315A 5558
LOC. MOD
R326 10K
R327 40.2K *
C305 1MF 35V
X315B 5558
G/S MOD.
R332 5K
R333 20.0K *
Q309 UC714
R330 10M
Q310 UC714
R331 10M
X317 5558
R339 10.0K *
R336 10.0K *
X318 7274IL
V TO MODULATOR J12-5
J21
1 OF 16 TONES OUTPUT (REAR PANEL)
3-16-0017 PC. BD.

NOTES:
1. ALL RESISTORS MARKED WITH ASTERISK ARE 1% TOL.
2. ALL UNMARKED DIODES ARE TYPE 1N4148.
3. ALL UPWARD ARROWS GO TO +12 V UNLESS OTHERWISE SHOWN.
4. ALL UNMARKED NPN TRANSISTORS TO BE 2N2222 OR 2N3415
5. ALL DOWNWARD ARROWS GO TO -20V UNLESS OTHERWISE SHOWN.
6. SIGNAL GND TO BE ISOLATED FROM PWR GND TO REDUCE TONE DISTORTIONS.
7. USE "TI" OR "SIGNETICS" COMPONENTS ONLY.
8. ALL UC714 TRANSISTORS MAY BE REPLACED BY UC734 OR 2N4223

3-16-0028	1	NAV-750A			ORANGE EJECTORS
NEXT ASS'Y	QT'Y	MODEL	ITEM	REQ'D	PART NO.	DESCRIPTION

APPLICATION — LIST OF MATERIALS

TOLERANCES: UNLESS OTHERWISE SPECIFIED DECIMALS: ± .008 ANGLES: ± 1/2° FRACTIONS: ± 1/64 SURFACE ROUGHNESS REMOVE ALL BURRS 125

MATERIAL — TREATMENT — FINISH

DRAWN JJG 2/3/73 — CHECKED KR 2/25/73 — APPROVED 1-17-74

INSTRUMENT FLIGHT RESEARCH CORPORATION WICHITA, KANSAS

TITLE: TONE SUMMATION BD. SCHEMATIC NAV-750 PC-3

SIZE C — PART NUMBER 3-16-0020 — REV J — SCALE — WEIGHT — SHEET 1 OF 1

Fig. 8-15 8-39

DATE	REV	CHANGE	APPD
5-2-77	A	INC ECN 8018 TJT WW	MG

+24V L1 VOR LIGHT

RF LEVEL TO METER SWITCH

FROM DET. J12-4

BRG. CHK. BD. J1-2

J23 DEMOD OUTPUT (REAR PANEL)

P9-21

J3-4 J3-3 J3-2

J18 EXT MOD (REAR PANEL) P9-19 P9-20 J3-7 J2-E

J2-8, J 9960Hz SIG IN

9960Hz R3 5K J3-9

J2-10 30Hz VAR. IN

30Hz R2 5K J3-13

J6-43 100MHz SIG IN J3-H

J2-11 1020Hz IN

1020Hz R4 5K J3-10

J3-6 J3-8 J3-J J3-11 J3-L

L3 UNCAL S20

L2 UNCAL S19

L4 UNCAL S21

L5 UNCAL S22

J6-3 UP COM ONLY

J6-39 200MHz LINE J3-20 J3-X J3-21

TO S25B-COMMON LOCALIZER DEVIATION SWITCHES

TO S26B-COMMON GLIDE SLOPE DEVIATION SWITCHES J3-Y

MASTER MOD R5 5K J3-S J3-15 J3-14

R301 20.0K* R302 1K

R306 10K R307 10M R305 10M R308 10K R309 10M R342 10M R310 2.21K* R311 2.21K* R303 2.21K* R304 2.21K* R370 10M

Q301 2N4223 Q318 2N4223 Q302 UC714 Q303 2N4223 Q305 2N4223

X301A 1/2 SN1458 X301B 1/2 SN1458 X307A 1/2 SN1458 X307B 1/2 SN1458

9960Hz MOD R312 5K R313 26.7K* X302B 1/2 SN1458 Q304 2N4223 R315 10M Q315 2N2222 R368 10K

X302A 1/2 SN1458 R364 5K R314 26.7K*

X319B 1/2 SN1458 X319A 1/2 SN1458 R371 15K R372 4.7K R378 10M R377 10M Q319 2N4223 R374 2K R373 845K*

R375 15K R376 2.2K

X308 SN72741L C309 33µf 10V TANT Q320 2N4223 R365 5K R366 26.7K*

Q306 2N4223 R319 2.21K* R320 2.21K* Q307 2N4223 Q308 2N4223 R316 15K R317 2.2K R369 2.2K

X311C 1/4 SN7400N DOWN ON COM. ONLY X311A 1/4 SN7400N X311D 1/4 SN7400N X309B 1/2 SN1458 X309A 1/2 SN1458 X310A 1/2 SN1458 R322 10M R321 10M R318 10M R323 10K

UP COM. ONLY

UP ON 200MHz

X315A 1/2 SN1458 R327 40.2K R326 10K LOC MOD Q309 2N4223 R330 10M

X315B 1/2 SN1458 R332 5K R333 20.0K* G/S MOD Q310 2N4223 R331 10M C305 µf 35V -12V

R334 2.21K* Q311 2N4223 R335 2.21K* Q312 2N4223 R337 10M X316A 1/2 SN1458 R338 10M X316B 1/2 SN1458 R339 10.0K* R336 16.2K* R367 10K

X317 1/2 SN1458 X318 SN72741L

J3-18 TO J12-5 MODULATOR

J3-V P9-18 J21 TONES OUTPUT (REAR PANEL)

C301 6.8µf 35V R345 2.21K* X303 SN72709L R343 5K RF LEVEL R344 12.1K* R346 10.0K* R347 1M C302 6.8µf 35V CR301 1N4148 X304 SN72741L R348 1K 30% R349 2K 100% R350 1.43K* R351 4.99K*

J3-1,22 SYSTEM GND. (-5V)

+5V J3-Z +5V

J3-E 0-100% TO METER SW. S16B-3

J3-5 0-30% TO METER SW. S16B-7

C308 µf 35V C307 µf 35V C303 33µf 20V

J3-A -11V

R353 1K* R354 1K* X305 SN72741L R355 470 R356 2.2K R357 1K Q313 2N2405

X310B 1/2 SN1458 X314A 1/3SN7410N R358 2.2K R360 2.2K Q314 2N2905 R359 1K CR303 1N823 X306 SN72741L R363 2K +11V ADJ R361 6.34K* R362 3.48K* C304 33µf 20V

J3-D +11V OUT

J3-8, F +12V

DOWN ON 200MHz DOWN ON LOC. FREQUENCIES

X312 SN72741L R324 30.9K* R325 10K NULL R328 15K R329 2.2K

X314C 1/3 SN7410N X314B 1/3 SN7410N X313B 1/2 SN1458 X311B 1/4 SN7400N Q316 2N2222 R340 10K C306 µf 35V

J3-19 J6-4 FREQ. CONTROL BD.

J3-N -20V +20V L7 LOCALIZER LIGHT

J3-17

J3-C -12V +20V L8 GLIDESLOPE LIGHT

J3-W

X313A 1/2 SN1458 R341 10K Q317 2N2222

PC BOARD 3-16-0289

NOTES:
1. ALL RESISTORS MARKED WITH ASTERISK ARE 1% TOLERANCE
2. SIGNAL GND TO BE ISOLATED FROM PWR GND TO REDUCE TONE DISTORTIONS
3. USE "TI" OR "SIGNETICS" COMPONENTS ONLY
4. ALL RESISTORS TO BE 1/4 W, 10% UNLESS OTHERWISE NOTED.

LAST NO'S. USED	NO'S NOT USED
C308	CR302
CR303	R352
Q320	
R378	
X319	

ITEM	REQ'D	PART NO	4-16-0298 TONE SUMMATION SCHEMATIC DESCRIPTION

LIST OF MATERIALS

DRAWN WW 12/2/76 — IFR INC - WICHITA KANSAS

TONE SUMMATION SCHEMATIC

PART NUMBER 4-16-0298 REV A

SIZE D WEIGHT SHEET 1 OF 1

4-16-0300 NEXT ASSY

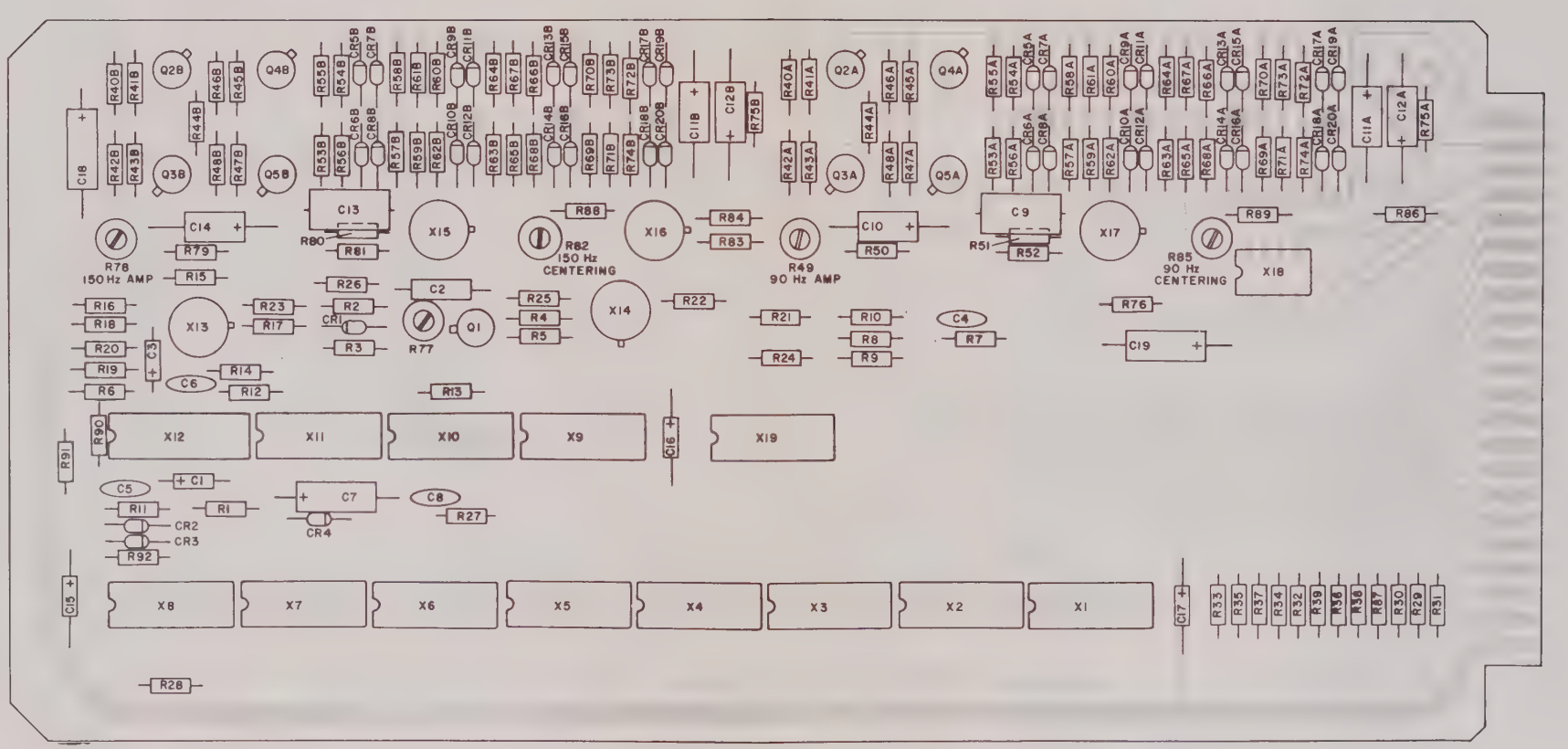

Fig. 8-17 LOCALIZER/BEARING CONTROL BOARD PARTS LAYOUT

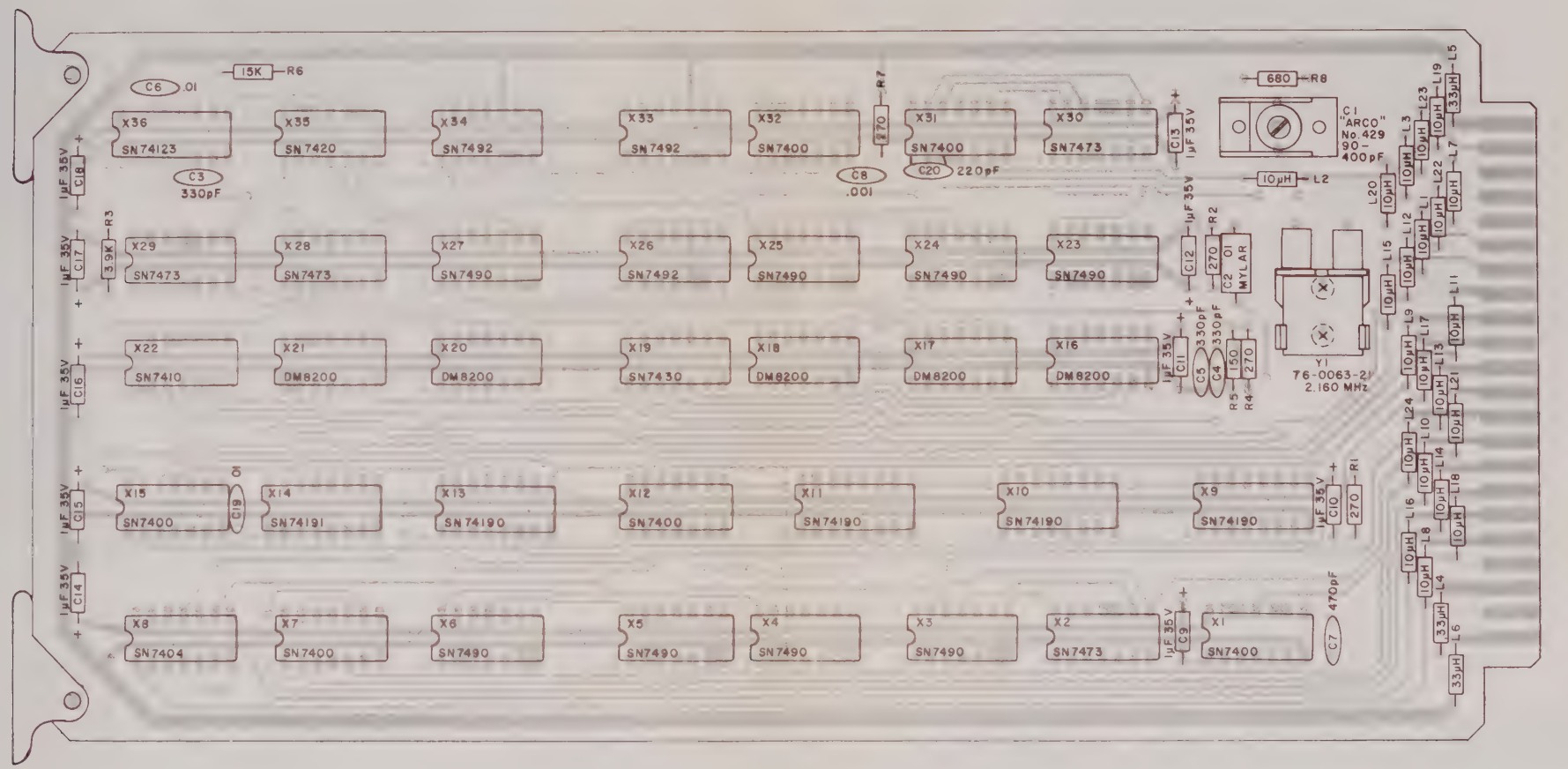

Fig. 8-18 BEARING LOGIC BOARD PARTS LAYOUT

LOCALIZER/BEARING CONTROL BOARD THEORY OF OPERATION

(NAV-750/A/B)

4-16-0024-25

1-1. Introduction.

1-2. The Localizer/Bearing Control Board (PC-4) receives VOR bearing information from the Front Panel, via the Bearing Logic Board (PC-5). This information is used in conjunction with the VOR bearing counter system to produce a 30 Hz VAR tone. The 30 Hz REF, 90 Hz, & 150 Hz tones are derived from the bearing counter system.

2-1. 150 Hz and 90 Hz Tones

2-2. The 30 Hz REF, 90 Hz and 150 Hz tones are digitally derived from the VOR bearing reference 2.16 MHz oscillator. The 2.16 MHz oscillator consists of a 2.16 MHz crystal, Y401, dual-input NAND gate X431A (7400), transistors Q401, & Q402 (2N3905) and associated circuitry. Variable capacitor C419, is used to trim the 2.16 MHz oscillator to the exact frequency desired.

2-3. An input on PC-4 pin 5 is used to externally gate the oscillator ON and OFF; through J10 on the Rear Panel. X431B (7400) provides an input for an external clock when the 2.16 MHz oscillator is disabled by grounding X431A pin 2. J-K flip-flop X430A is used as a divide-by-2 circuit to obtain a 1.08 MHz clock rate. The 1.08 MHz clock rate is divided by 36000 to obtain the 30 Hz REF signal.

2-4. X423-X425 (7490) are serially connected decade counters with BCD outputs. X426 (7492) is a divide-by-12 counter serially connected to X425. X423-X426 divide the 1.08 MHz clock by 12000 to obtain the 90 Hz square-wave output.

2-5. X434 (7492) is a divide-by-6 counter with BCD outputs. X433 (7492) is a divide-by-12 counter. X423, X424, X433, and X434 are serially connected to divide the 1.08 MHz clock by 7200 to obtain the 150 Hz tone.

2-6. The phase of the 150 Hz tone may be shifted 5° relative to the 90 Hz tone for each 1° selected on the BEARING SELECTOR. This phase-shift is accomplished by resetting X433 and X434 from the 30 Hz VAR signal instead of the 30 Hz REF signal, when the Front Panel Ø switch is depressed.

2-7. When S27 (Ø) is depressed, X432C (7400) pin 10 and X432D (7400) pins 12 & 13 go low. This causes X432D pin 11 to go high. With X432D pin 11 high, the 30 Hz VAR signal is gated and inverted through X432A to pin 4 of X432B (7400).

2-8. When S27 (Ø) is not depressed; X432C pin 10 and X432D pins 12 & 13 float-up. With X432D pin 12 & 13 floating up, X432D pin 11 is low. The 30 Hz VAR signal is not gated through X432A. X432A pin 3 remains high. Since X432C pin 10 floats-up, the 30 Hz REF signal is inverted and gated through X432C. With X432B pin 4 high, the 30 Hz REF signal is gated and inverted by X432C to the reset pins of X433 & X434.

3-1. 30 Hz REF Tone.

3-2. Serially connected decade counters X423, X424, X425, and X427 (7490); and serially connected J-K flip-flops X428A and X428B (7473) provide the clock division used to obtain the 30 Hz REF square-wave from the 1.08 MHz clock. Four input NAND gate X435B (7420) monitors output lines from X427 and X428A. When the BCD output from X427 and X428A reaches 18000 X435B pin 11 goes low clocking X429A. This sets the $\overline{Q}$ output of X429A to a low state. Four input NAND gate X435A (7420) monitors output lines from X427, X428A, & X428B. When the BCD count from X427, X428A & X428B equals 36000; X435A triggers a one-shot, X436A (74123). X436A resets X427, X428A & X428B for that count and clears X429A. $\overline{Q}$ of X429A is forced to a high state. $\overline{Q}$ of X429A makes one complete cycle every 36000 clock pulses from the 1.08 MHz clock and is used as the 30 Hz REF output.

4-1. 30 Hz VAR Tone.

4-2. The 30 Hz VAR tone is phase-shifted with respect to the 30 Hz REF tone. The amount of phase-shift of the 30 Hz VAR tone is dependant upon the bearing selector controls on the Front Panel.

4-3. Like the 30 Hz REF tone, the 30 Hz VAR tone is derived from the 1.08 MHz oscillator on PC-4. The 1.08 MHz oscillator provides 36000 clock pulses for every cycle of the 30 Hz REF output. Therefore, every clock pulse from 1.08 MHz oscillator is equivalent to 0.01° of the 30 Hz output signal. The phase difference between the 30 Hz VAR tone and the 30 Hz REF tone is determined by the number of clock pulses the 30 Hz VAR counters are delayed after the start of 30 Hz REF counting. For example: If the start of the 30 Hz VAR signal is delayed by one clock pulse the phase of the 30 Hz VAR tone is shifted by 0.01° with respect to the 30 Hz REF tone. The phase of the 30 Hz VAR tone may be shifted in increments of 0.01° from 0.00° to 359.99°.

4-4. The bearing selection commands from the front panel bearing controls are processed through circuitry on the Bearing Control Board (PC-5) into BCD form. This information is then loaded into presettable, serially connected, up-down counters X409-X411, X413 (74190) and X414 (74191).

4-5. When the number of the 1.08 MHz clock pulses equals the BCD number preset into X409-X411, X413-X414, four bit comparators X416-X418, X420, & X421 (DM8200) pins 9 & 6 go high. These high logic levels are detected by NAND gates X419 (7430) & X412A (7400). When X416-X418, X420 & X421 are all in coincidence, the inverted outputs of X412A, & X419 are summed by NAND gate X415B. A low logic level results on X415B pin 16. This change to a low logic level on X415B pin 16 clocks X430B & X402B (7473). X430B is used to toggle X431D (7400). X431D gates a pulse train of 1.08 MHz clock pulses to the counter assembly equal in duration to the 30 Hz VAR start delay.

4-6. At coincidence of X416-X418, X420 & X421; $\overline{Q}$ of X402B (7473) is toggled to a low logic level. Q of X420B goes high. When Q of X402 goes high, NAND gate X431C (7400) allows the 1.08 MHz clock to pass to counters X403-X406 (7490) and X402 (7473). X401A (7400) monitors outputs of X402A and X403. When a count of 18000, half the 30 Hz cycle, is reached the output pin 3 of X401A goes low. This Low output on X401A pin 3 clears X402B. At this time, $\overline{Q}$ of X402B goes high and Q of X402B goes low. With Q of X402B Low, the 1.08 MHz clock pulses are stopped from reaching X402-X406 until; the 30 Hz REF count again reaches coincidence with the bearing information loaded into X409-X411, X413 & X414. Coincidence is again reached 18000 clock pulses after X101A pin 3 goes low. The outputs of X402B are also used as the 30 Hz VAR INVERT and the 30 Hz VAR outputs to the TO-FROM SWITCH on the Front Panel.

4-7. NAND gates X412A (7400), X422A & X422B (7410) monitor the 20, 60, & 80 degree lines of X413 and the 100 & 200 degree lines of X414. When counting down past 0° using the VARIABLE BEARING CONTROL the VOR Bearing Counter will register very briefly 399.99°. At this time the 80°, 100°, & 200° lines from X413 & 414 will be high. This condition is sensed by X422A which will change state. This causes X415C (7400) pin 8 to go high. With X415C pin 8 high; monostable multivibrator X436 (74123B) outputs complementary pulses on pins 4 & 13. The Q output of X436B pin 12 temporarly disables X5002 on PC-5. This causes the load line to X408-X411, X413 & X414 to go low and allows X408, X411, X413, & X414 to be loaded. Because the up-down line to X415A (7400) is high when counting down; the positive $\overline{Q}$ output pulse from X436B pin 4, is gated through X419, NAND

4-7. gates X407A, X407B, X407D (7400) and inverter X408F (7404). This signal loads a bearing of 359.99° into X408-X411, and X413-X414.

4-8. When counting up past a bearing of 359.99°; X422B senses a count of 360 degrees on X413 pins 2 & 6 and X414 pins 3 & 2. At this time, the output of X415C pin 8 changes state and triggers monostable multivibrator X436B. The Q output of X436B is routed to circuitry on PC-5 to bring the load line of X409-X411, X413 & X414 low. The up-down line to X409-X411, X413 & X414 and X415A, pin 2, is low. At this time, the $\overline{Q}$ output pulse from X436 is not gated through X415A. X409-X411, X413 & X414 are loaded with a bearing of 00.00 degrees.

BEARING LOGIC BOARD THEORY OF OPERATION

(NAV-750/A/B)

4-16-0024-25

1-1. Introduction.

1-2. The Bearing Logic Board (PC-5) receives VOR bearing commands from the VARIABLE BEARING CONTROL, 0.1 or 0.5 VARIABLE BEARING SELECT SWITCH, VOR BEARING SELECT PUSHBUTTON SWITCHES, TO-FROM BEARING SWITCH, and the +10 and -10 DEGREE BEARING PUSHBUTTON SWITCHES. It also receives direction data from the VARIABLE BEARING CONTROL and converts the 150 Hz and 90 Hz square-wave signals from PC-4 to sine-wave form for use in the Front Panel DDM switches.

2-1. Slap Circuit (Typ.).

2-2. The slap circuit inputs a 5V, TTL level signal. This signal is buffered by a driver circuit consisting of Q5003 (2N3251A) and Q5002 (2N2222). The driver circuit switches Q5004 (2N2222) and Q5005 (2N3251A) in a complimentary fashion. Q5004 is biased ON when Q5005 is biased OFF and Q5004 is biased OFF when Q5005 is biased ON. This causes the output of Q5004 & 5005 to be effectively slapped between the power supply voltages, and produces a ±11V square-wave output.

3-1. Sine Synthesizer Circuit (Typ.).

3-2. The typical sine synthesizer circuit is a series of diode switches and resistor networks. The diodes are reverse biased at successively higher voltages. As the voltage of the triangle-wave ramp input increases, each successive odd-numbered diode becomes forward biased. This increases the load on the input resistor and decreases the output level. The output of the synthesizer thus approximates a sine-wave. The even-numbered diodes operate in a like manner during the negative portion of the input signal.

4-1. 150 Hz Signal Processing.

4-2. The 150 Hz square-wave signal is inputted on PC-5 pin U. The 150 Hz signal is then sent through Slap Circuit #2 to the input of op amp integrator X5015 (72741L). X5015 produces a triangle-wave output on pin 6. This signal is converted to a sine-wave by Sine-Wave Synthesizer #3. A d.c. offset centering voltage is applied to the 150 Hz sine-wave by R5088 & R5082. The output of SWS #3 is connected to PC-5 pin 21. This line is grounded to turn off the 150 Hz tone when 90 Hz is selected on the G/S DDM SELECTOR SWITCH. The 150 Hz signal output of SWS #3 is also routed to op amp

buffer X5016 (72741L). The output of X5016 is the 150 Hz output to the GLIDE SLOPE SWITCH and to the Back Panel.

5-1. 90 Hz Signal Processing.

5-2. The 90 Hz square-wave signal is inputted on PC-5 pin V. The 90 Hz signal is then sent through Slap Circuit #1 to the input of op amp integrator X5017 (72741L). X5017 produces a triangle-wave output on pin 6. This signal is converted to a sine-wave by SWS #1. A d.c. offset centering voltage is applied to the 90 Hz sine-wave by R5085 & R5089. The output of SWS #1 is routed to op amp buffers X5018A & X5018B (5558). The input from the GLIDE SLOPE CAL POT to X5018A pin 2 is used to adjust the amplitude of the 90 Hz G/S tone output. The input from the LOCALIZER CAL POT to X5018B pin 6 is used to adjust the amplitude of the 90 Hz LOC tone output. The SHORT 90 Hz line is used, via the G/S DDM SELECTOR SWITCH, to turn off the 90 Hz tone when 150 Hz is selected on the G/S DDM SELECTOR SWITCH. The 90 Hz LOC signal is routed to the Back Panel and to the LOCALIZER SWITCH. The 90 Hz G/S signal is routed to the GLIDE SLOPE SWITCH.

6-1. VARIABLE BEARING CONTROL Operation.

6-2. The VARIABLE BEARING CONTROL on the Front Panel is capable of altering the VOR bearing information presented to the VOR bearing counters, on PC-4, in either 0.01 or 0.05 degree steps for each 1/40 revolution of the VARIABLE BEARING CONTROL. The bearing control consists of a 40 tooth gear, 2 infrared emitting LED's, and two infrared sensitive phototransistors. One LED, phototransistor assembly is used as a clock source and the other LED, phototransistor assembly is used as a direction-of-rotation sensor.

6-3. When infrared radiation reaches the clock transducer phototransistor the base of the transistor develops a voltage potential that allows the phototransistor to turn ON. This provides a low resistance path to ground for the inverted (-) input of voltage comparator X5013 pin 2. As the gear teeth of the VARIABLE BEARING CONTROL break the beam of infrared radiation to the phototransistor, the forward-biasing voltage potential on the base is lost. This turns the phototransistor OFF and the inverting (-) input line of X5013 pin 2 (MC-1709 CG) is pulled towards +12V by a pull-up resistor. Rotation of the VARIABLE BEARING CONTROL causes a clock pulse-train to be outputted by X5013. The clock pulses from X5013 pin 6 are inverted by op amp buffer X5008C (7404). The pulses from X5008C are routed to X5019B pin 5 (7400) and X5012A pin 9 (74123).

6-4. A clock pulse on X5012A pin 9 causes the monostable multivibrator to trigger, outputting a positive pulse on pin 5. This positive pulse reverse biases diode CR5001. When CR5001 is reverse biased C5002 begins to charge. The rate at which C5002 charges may be adjusted by R5019. When the emitter of Q5001 reaches a high enough voltage, the emitter base 2 junction of Q5002 becomes forward biased and allows C5002 to partially discharge. This continues until the voltage on the emitter falls below a certain level and the cycle starts over. This oscillatory cycle of Q5001 and the RC network results in a series of positive going spikes on the base 2 output of the UJT. The number of output pulses is adjusted by changing the charging rate of C5002. Pulse generation stops when CR5001 again becomes forward biased at the end of the output pulse from X5012A. The pulse from the base 2 of the UJT are conditioned and buffered by X5010A (7404) & X5011A (7400) and routed to X5019D pin 13 (7400).

6-5. When 0.05 is selected on the VARIABLE BEARING SELECT SWITCH, X5019D pin 12 & X5019A pins 1 & 2 float high. At this time, X5019A pin 3 is low. With X5019A pin 3 low, X5019B pin 6 will remain high. Because pin 12 of X5019D and X5019C pin 10 are high; the 5-pulse-per-clock-pulse train, from Q5001, is gated through X5019D & X5019C to X5010C pin 9 (7404).

6-6. When 0.01 is selected on the VARIABLE BEARING SELECT SWITCH, X5019D pin 12 & X5019A pins 1 & 2 are pulled to ground. The 5-pulse-per-clock-pulse train from Q5001 will not be gated through X5019D and X5019D pin 11 will remain high. At this time, X5019A pin 3 will be high. Because X5019B pin 4 and X5019C pin 9 are high, the clock pulses from X5008C pin 12 will be gated through X5019A & X5019C. These clock pulses are applied to X5010C pin 9.

6-7. X5010C & X5010B condition and buffer the pulses from X5019C. The pulses (or 5-pulse trains) are used as the VOR 30 Hz VAR Bearing Counter Clock input on PC-4.

6-8. The operation of the VOR Bearing Direction Transducer is the same as the VOR Bearing Clock Transducer except that , the direction transducer pulses are 90° out of phase with the clock pulses. The pulses from the Direction Transducer are routed and inverted through op amp voltage comparator X5014 (MC-1709CG) to NAND gate X5011C (7400) pin 12. When the +10° and or -10° switches on the front panel are not depressed, X5011C pin 13 and X5011B pin 9 (7400) float high. This allows the direction pulses to be gated through X5011C & X5011B to the up-down line of the VOR Bearing counters on PC-4 (X409-X11, X413 & X414).

6-9. When rotating the VARIABLE BEARING CONTROL clockwise, the direction transducer pulses will lead the leading edge of the clock transducer pulses by 90°. Because 74190 & 74191 IC's are leading edge triggered, the VOR Bearing Counters are caused to trigger at a time when the up-down line is at a low logic level. The count of the VOR Bearing Counters is incremented.

6-10. When the VARIABLE BEARING CONTROL is rotated counterclockwise, the direction transducer pulses will lag the clock transducer pulses by 90°. Because 74190 & 74191 IC's are leading edge triggered, the VOR Bearing counters are caused to trigger at a time when the up-down line is a high logic level. The count of the VOR Bearing counters is decrimented.

7-1. +10° AND -10° Operation.

7-2. Two pushbutton switches on the Front Panel allow bearing changes of +10 and -10 degrees to be made to any bearing present in the VOR Bearing counter. For example: when the -10 degree switch is pressed, pin 9 of X5011B is brought to ground and the output X5011B pin 8 goes high. This pulls the up-down line of the VOR Bearing counters high. At the same time, the cathode of CR5003 is brought to ground. With CR5003 forward biased, X5012B (74123) is triggered to output a pulse on X5012B pin 13. This pulse is conditioned by a Schmitt Trigger X5010D & X5010F (7404). The conditioned pulse is applied to the VOR Bearing 10 degree Counter X413 to retard the VOR Bearing Counter by 10 degrees.

7-3. When the +10 degree switch is pressed pin 13 of X5011C is brought to ground and the output of X5011C pin 11 goes high. With X5001B pin 10 high and X5011B pin 9 floating high, the up-down line to the VOR Bearing Counters is at a low logic level and CR5002 is forward biased. Operation is the same as in the preceding paragraph except that, with the up-down line high, the VOR Bearing counters will be incremented by +10 degrees.

8-1. VOR BEARING SELECTOR SWITCH Operation.

8-2. When the NAV-750 test set is turned on, a system normalizer consisting of X5008 sets the VOR Bearing counters to 0.00 degrees. At turn on, C5007 conducts and pulls X5008B pin 11 (7404) low. C5007 begins charging until X5008B pin 11 reaches a high logic level. The positive going output pulse from X5008B pin 10 is inverted by X5008A (7404). This produces a brief logic low condition on the load line to X408-X411, X413 & X414. This brief low on the load line also allows all zeroes to be loaded into the VOR Bearing Counter from the VOR Gating logic; X5003, X5004, X5006, X5007, X5005A, & X5005B.

BEARING LOGIC BOARD THEORY OF OPERATION

8-3. When any Bearing Pushbutton Switch is depressed, either X5002 or X5001 (7430) is disabled and its output goes to a high logic level. This logic level is successively gated and inverted by X5009A (7420), X5011D (7400) and X5008A) (7404) to produce a momentary low on the load line to the VOR Bearing counter on PC-4.

8-4. The various Bearing Pushbutton Switches are routed to the inputs of NAND gates whose outputs are used to load the VOR Bearing counters. When any Bearing Pushbutton Switch is depressed; the 0.01, 0.1 and 1.0 degree counters are preset to zero.

8-5. X5003 causes a bearing of 10 degrees to be loaded. X5004 causes 20 degrees to be loaded. X5005B causes 80 degrees to be loaded. X5007 causes 100 degrees to be loaded and X5006 causes 200 degrees to be loaded. By loading the appropriate gates the desired VOR bearing may be preset.

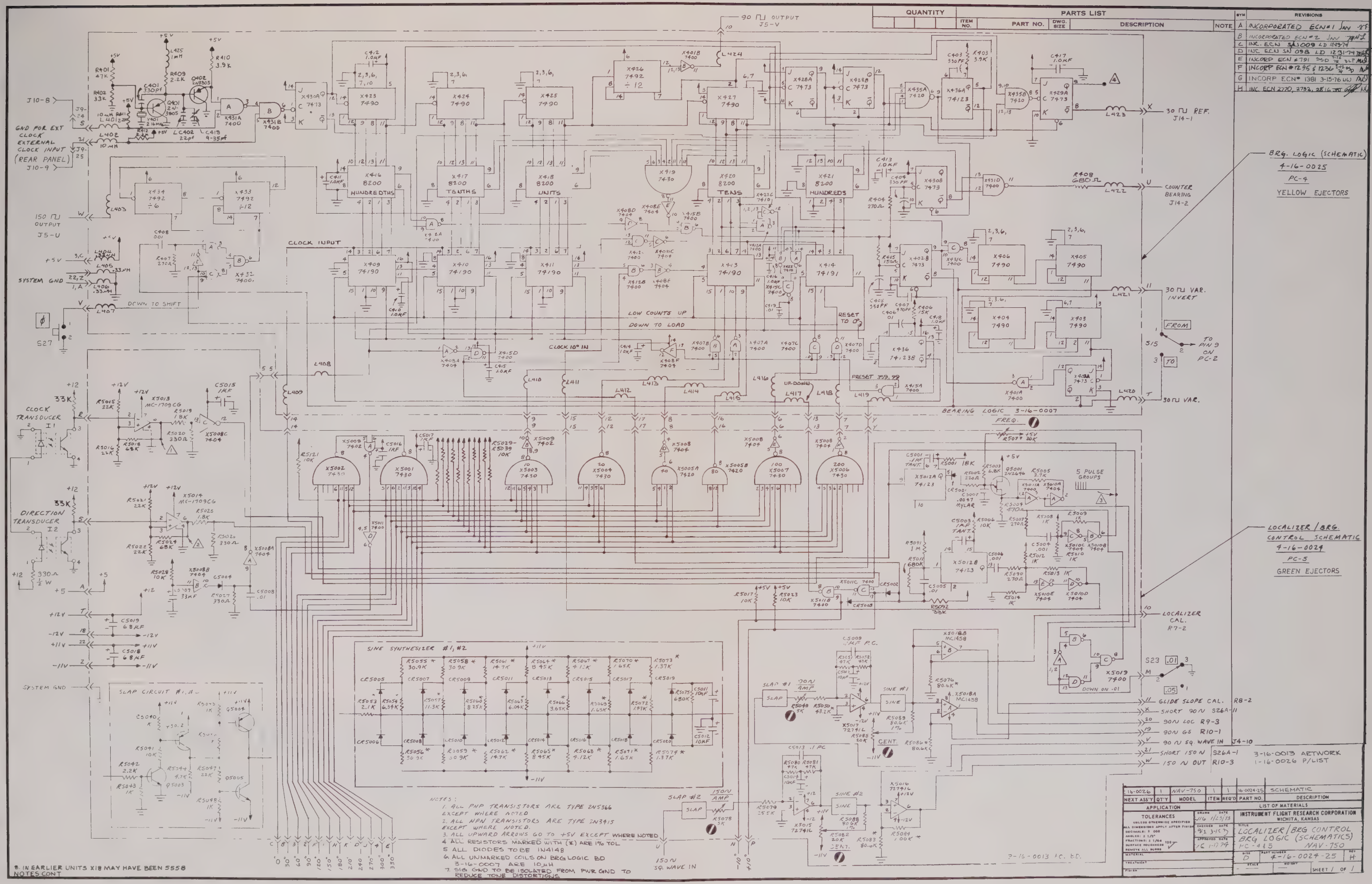

QUANTITY
PARTS LIST
ITEM NO.
PART NO.
DWG. SIZE
DESCRIPTION
NOTE
SYM
REVISIONS
A INCORPORATED ECN#1
B INCORPORATED ECN#2
C INC. ECN SN 009 LD 12-29-74
D INC. ECN SN 098 LD 12-31-74
E INCORP ECN #791
F INCORP ECN #1295 & 1236
G INCORP ECN# 1381 3-15-76
H INC. ECN 2770, 2792, 2816
90 ⊓ OUTPUT J5-V
150 ⊓ OUTPUT J5-U
GND FOR EXT CLOCK
EXTERNAL CLOCK INPUT (REAR PANEL) J10-9
J10-8
SYSTEM GND
DOWN TO SHIFT
CLOCK INPUT
LOW COUNTS UP
DOWN TO LOAD
CLOCK 10° IN
RESET TO 0°
PRESET 359.99
UP-DOWN
BEARING LOGIC 3-16-0007
FREQ.
30 ⊓ REF. J14-1
COUNTER BEARING J14-2
30 ⊓ VAR. INVERT
30 ⊓ VAR.
FROM
TO
TO PIN 9 ON PC-2
BRG. LOGIC (SCHEMATIC) 4-16-0025 PC-4 YELLOW EJECTORS
LOCALIZER / BRG. CONTROL SCHEMATIC 4-16-0024 PC-5 GREEN EJECTORS
CLOCK TRANSDUCER I1
DIRECTION TRANSDUCER I2
SYSTEM GND
SLAP CIRCUIT #1, #2
SINE SYNTHESIZER #1, #2
SLAP #1 90N AMP
SLAP #2 150N AMP
SINE #1
SINE #2
CENT.
150 N SQ. WAVE IN
LOCALIZER CAL. R7-2
S23
DOWN ON .01
GLIDE SLOPE CAL. R8-2
SHORT 90 N S26A-11
90 N LOC R9-3
90 N GS R10-1
90 N SQ. WAVE IN J4-10
SHORT 150 N S26A-1
150 N OUT R10-3
3-16-0013 ARTWORK
1-16-0026 P/LIST
NOTES:
1. ALL PNP TRANSISTORS ARE TYPE 2N5366 EXCEPT WHERE NOTED
2. ALL NPN TRANSISTORS ARE TYPE 2N3415 EXCEPT WHERE NOTED.
3. ALL UPWARD ARROWS GO TO +5V EXCEPT WHERE NOTED
4. ALL RESISTORS MARKED WITH (*) ARE 1% TOL
5. ALL DIODES TO BE 1N4148
6. ALL UNMARKED COILS ON BRG LOGIC BD 3-16-0007 ARE 10μH
7. SIG GND TO BE ISOLATED FROM PWR GND TO REDUCE TONE DISTORTIONS
8. IN EARLIER UNITS X18 MAY HAVE BEEN 5558
NOTES CONT
16-0026 | 1 | NAV-750 | 1 | 1 | 16-0024-25 | SCHEMATIC
NEXT ASS'Y | QT'Y | MODEL | ITEM | REQ'D | PART NO. | DESCRIPTION
APPLICATION
LIST OF MATERIALS
TOLERANCES
INSTRUMENT FLIGHT RESEARCH CORPORATION
WICHITA, KANSAS
LOCALIZER / BRG CONTROL BRG LOGIC (SCHEMATICS) PC-4 & 5 NAV-750
D 4-16-0024-25 H
SHEET 1 OF 1

Fig. 8-19

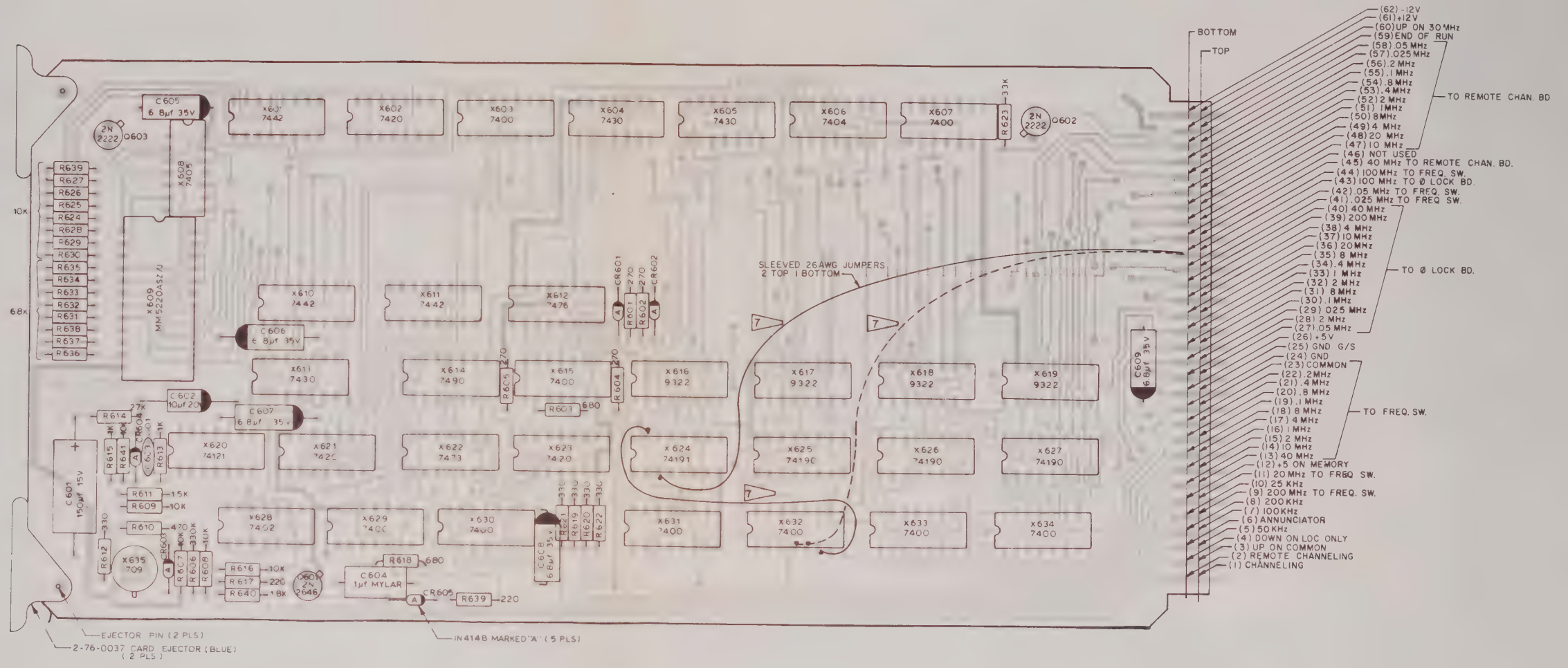

7 Indicates Jumper Wire Used on NAV-750B Only.

Fig. 8-20 FREQUENCY CONTROL BOARD PARTS LAYOUT

FREQUENCY CONTROL BOARD THEORY OF OPERATION

(NAV-750B)

4-16-0326

1-1. Introduction.

1-2. The Frequency Control Board (PC-6) accepts frequency selector commands from the Front Panel FREQUENCY SELECTOR THUMBHWEEL SWITCHES, the LOCALIZER SWITCH, the GLIDE SLOPE SWITCH, the MANUAL FREQUENCY STEP SWITCH, and the REMOTE CHANNELING INPUT on the Rear Panel. The Frequency Control Board develops frequency control signals used on the Remote Channeling Board (PC-7) and the Phase-Lock Assembly. The Frequency Control Board also has the capability for automatic channeling, via the AUTO-MANUAL FREQUENCY CONTROL SWITCH and the CHANNELING RATE CONTROL on the Front Panel. The size of the channeling steps is controlled by the Front Panel CHANNELING FREQUENCY INCREMENT SWITCH which allows channeling in 25, 50, 100 & 200 kHz steps. PC-6 also outputs modulation selector commands to the Tone Summation Board PC-3.

2-1. Manual Frequency Controls.

2-2. With the AUTO-MANUAL FREQUENCY CONTROL SWITCH (S29) in the MANUAL position X615A pin 2 (7400) is brought to a low logic level through LED (L9). X415A, X415B (7400) and R603 form a Schmitt Trigger Circuit. When S29 in the manual position, the LOAD Lines to the counters X624 (74191), X625-X627 (74190) and the CLR inputs to X612A & X612B (7416) are low. Frequency selector data from the FREQUENCY SELECTOR THUMBWHEEL SWITCHES (S28) is inverted and buffered by X631B, X631D, X632A, X632C, X632D, X633A, X633B, X633C, X633D, X634A, X634B, X634C and X634D (7400); and presented to the data inputs of the counters. Because the Load Lines of the counters are low, the frequency selector data is passed through the counters and applied to the Remote Channeling Board (PC-7), data selectors X616-X619 (9322), the frequency pairing ROM X609 (5220) and to decoding circuitry; X610, X611, X603A, X603B, X607A, X607B, X605A, X606A, X604, X628D, & X628A. The decoding circuitry is used to determine the appropriate modulation for a selected frequency. The decoding circuitry also generates a signal used to halt the automatic channeling.

2-3. BCD to decimal decoders X610 & X611 (7422) are used to detect when a Localizer frequency from 108.1 to 111.9 MHz is selected on the FREQUENCY SELECTOR THUMBWHEEL SWITCH. X613 (7430) monitors the odd decimal outputs of X610. X621A (7420) monitors the 0, 1, 5, 7, 8, & 9 decimal outputs of X611. When a LOC frequency is selected the outputs of X613 & X621A will be high. This causes the output of NAND gate X629C (7400) to go low. This signal is routed to X628C (7402).

2-4. NAND gates X631A, X631B, (7400) monitor the 8 & 9 MHz output lines of X611 and the 10 MHz line from X625 to determine if 118 to 119 MHz freuqencies have been selected. This information is routed to X621B (7420) to allow the UP ON COMM output to override the DOWN ON LOC OUTPUT for 118-119 frequencies, only.

2-5. The 20 & 40 MHz lines applied to the input of NOR gate X628D (7420) cause COMM modulation to be selected at all frequencies above 120 MHz. The 200 MHz line applied to NOR gate X628A pin 3 disables COMM modulation for GLIDE SLOPE frequencies.

2-6. NAND gate X607A (7400) monitors the 10 & 20 MHz output lines of X625. The output of X607A is routed to NAND gate X607B (7400) pin 4. X606D (7404) monitors the 40 MHz line from X625 and its output is routed to X607B pin 5. When the 10 & 20 MHz lines are high and the 40 MHz line is low, the output of X607B will be high. This is the UP ON 30 MHz signal.

2-7. A custom programmed ROM X609 (5220) is used to accomplish the pairing of Localizer and Glide Slope frequencies. The BCD Localizer frequency information from the counters is applied to the inputs of X609 through level translators. X608A-F (7404) and Q603 (2N2222) are used to convert the +5V TTL level from the counters to the +12V level required by X609.

2-8. The output of X609 is eight parallel bits of BCD information. This represents the Glide Slope frequency that is paired to the Localizer frequency selected on the Frequency Selector Thumbwheel Switch. To adequately represent the Glide Slope frequency, ten bits of information are required. In order to accomplish this the 3 most significant bits of the ROM data output (X609 pins 11, 10, & 9) are encoded in binary form to represent 5 output lines. These three bits of information are decoded by X601 (7442) and X603A - X603D (7400) to obtain the units and tens digit information, in BCD form, for the paired Glide Slope frequency.

2-9. These data lines and the other 5 data lines from X609 are applied to inputs of the 2-line-to-1-line data selectors X616-X619. These data selectors are controlled by the LOC-G/S SWITCH S31 to select either the actual Localizer frequency information or the paired Glide Slope frequency information. The output of the data selectors is applied to the Phase Lock Assembly and is used to set the frequency of the RF oscillator.

3-1. Automatic Channeling Operation

3-2. Automatic Channeling is controlled by an oscillator composed of op amp X635 (709) and associated circuitry. The charging rate of C601 is determined by the CHANNELING RATE CONTROL R11. When C601 charges to a high enough voltage for the voltage on the inverting input (-) of X634 pin 2 to become more positive than the voltage on the noninverting (+) input pin 3, X635 turns ON and the output X635 pin 6 drops to a voltage level close to ground. At this time, CR603 becomes forward biased and allows C601 to discharge. This produces an output pulse which terminates when the voltage on X635 pin 2 falls below the voltage on X635 pin 3. After X635 turns off, C601 begins to charge again and starts another cycle. The oscillator pulses are routed to X622B pin 5.

3-3. When the STEP SWITCH, S33, is depressed X620 pin 3 (74121) is brought to ground. This causes X620 to output a negative going TTL pulse, $\overline{Q}$, which forward biases CR604 and causes X622B pin 5 to go briefly to a low logic level.

3-4. When either a $\overline{Q}$ pulse from X620 or an oscillator pulse from X635 is present on X622B pin 5, X622B will be clocked. When X622B is clocked, Q output of X622B goes high and the $\overline{Q}$ output goes low. With the Q output of X622B high, the cathode of CR605 is brought high. This allows a UJT oscillator consisting of Q601 (2N2646), C604 & associated resistors to oscillate. The output of the UJT oscillator is applied to a Schmitt Trigger consisting of X629A & X629B (7400). This Schmitt Trigger conditions the oscillator's spike output pulses. The output of the Schmitt Trigger is applied to the clock inputs of X614 (7490) & X612B. The $\overline{Q}$ output of X622B is applied to the reset inputs of X614.

3-5. The number of pulses outputted by the UJT oscillator is determined by the STEP kHz SWITCH, S32, which determines the size of the channeling steps. Channeling may be in increments of 25, 50, 100, or 200 kHz. X614 counts the number of pulses from the UJT oscillator. When the count reaches 1, 2, 4, or 8, which directly corresponds to the 25, 50, 100, or 200 kHz steps, the approrpiate NAND gate of X630 (7440) changes the state of its output line. This signal is gated through X623A (7420) and X623B (7420) and clears X622B. At this time, the Q output of X622B goes low, to halt the UJT oscillator and the $\overline{Q}$ output of X622B goes high, resetting X614

3-6. The pulses from the UJT oscillator increment the frequency information stored in serially connected counters X612B, X612A, X624-X627. This changes the frequency of the RF oscillator by the required steps. The output of the UJT oscillator is inhibited at the end of a channeling band by decoding gates X605, X604, X607C, & X607D by bringing X629B pin 5 to a low logic level.

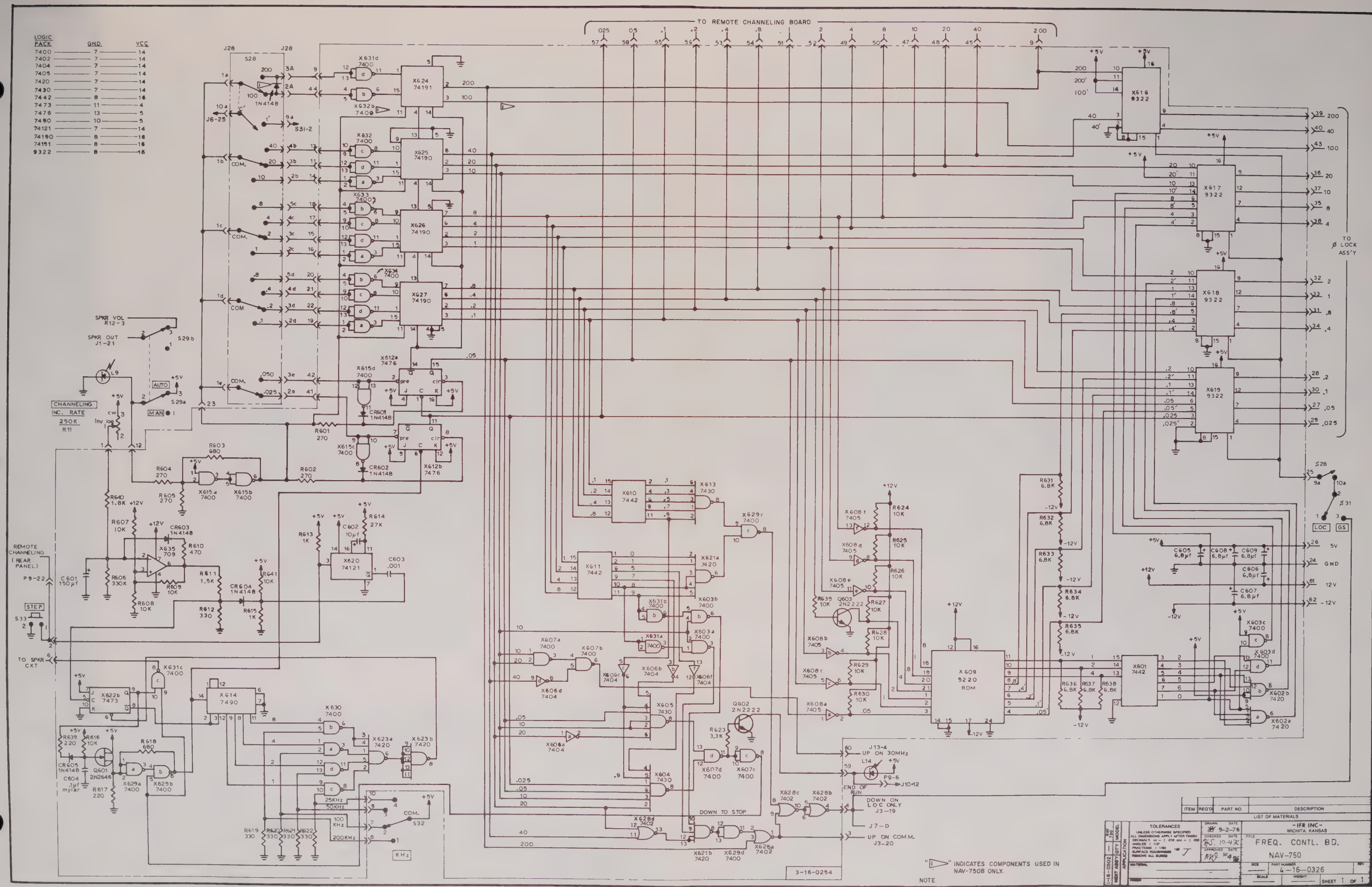
TO REMOTE CHANNELING BOARD
LOGIC PACK
GND
VCC
7400 7 14
7402 7 14
7404 7 14
7405 7 14
7420 7 14
7430 7 14
7442 8 16
7473 11 4
7476 13 5
7490 10 5
74121 7 14
74190 8 16
74191 8 16
9322 8 16
TO Ø LOCK ASS'Y
CHANNELING INC. RATE 250K R11
REMOTE CHANNELING (REAR PANEL)
TO SPKR CKT
SPKR VOL R12-3
SPKR OUT J1-21
AUTO
MAN
STEP
DOWN TO STOP
UP ON 30MHz
END OF RUN
DOWN ON LOC ONLY J3-19
UP ON COMM. J3-20
LOC
GS
"1" INDICATES COMPONENTS USED IN NAV-750B ONLY.
NOTE
3-16-0254
ITEM
REQ'D
PART NO.
DESCRIPTION
LIST OF MATERIALS
TOLERANCES
-IFR INC-
WICHITA, KANSAS
FREQ. CONTL. BD.
NAV-750
4-16-0326
SHEET 1 OF 1

Fig. 8-21

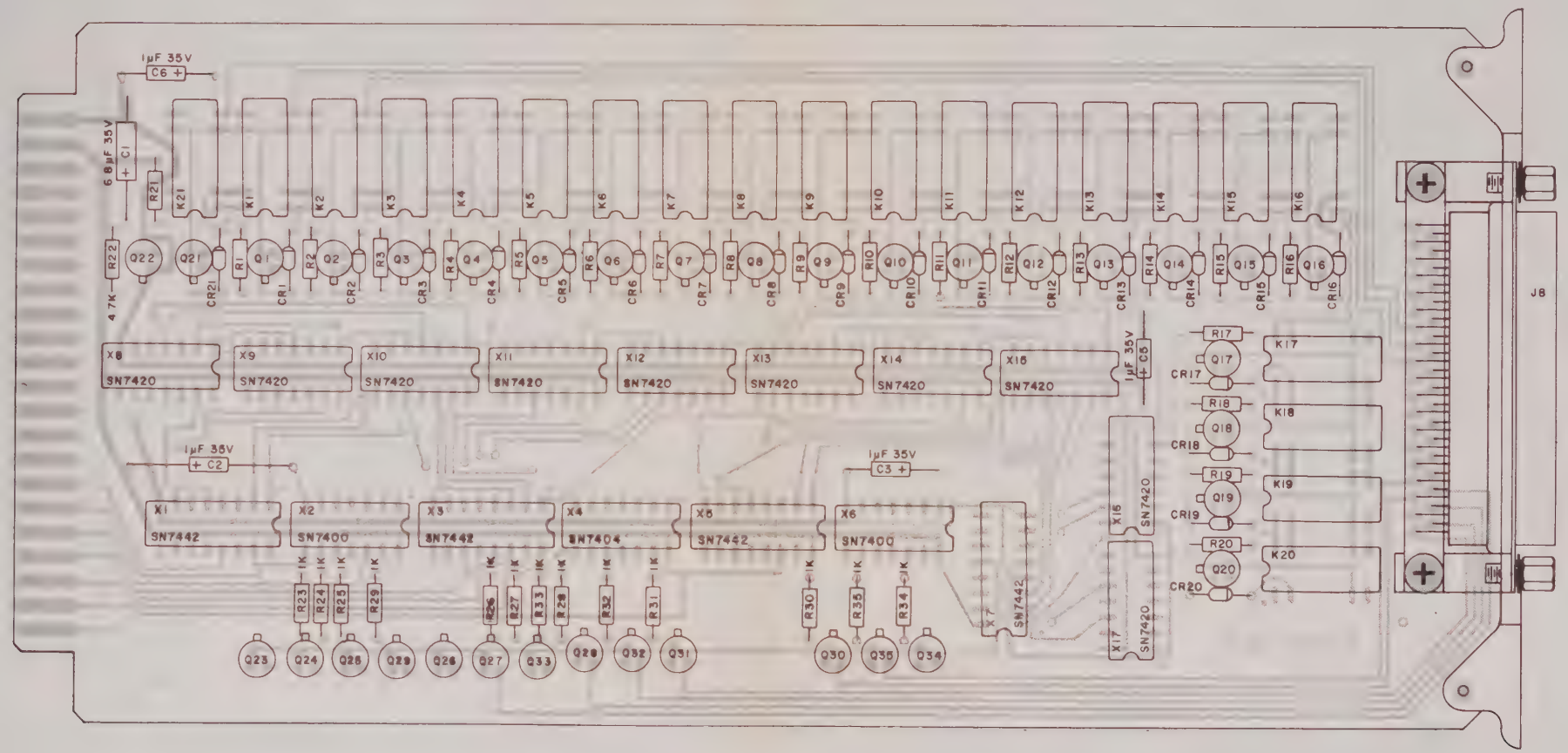

Fig. 8-22. REMOTE CHANNELING BOARD PARTS LAYOUT

REMOTE CHANNELING BOARD THEORY OF OPERATION

(NAV-750/A/B)

3-16-0018

1-1. Introduction.

1-2. The Remote Channeling Board (PC-7) accepts BCD coded frequency information from the Frequency Control Board and outputs 2-out-of-5 encoded frequency information for use in external devices.

2-1. Operation.

2-2. The circuitry on PC-7 consists of four simular stages of decoders of which the 1 MHz stage is typical. BCD frequency information is applied directly to the inputs of a BCD to Decimal Decoder X703 (7442) and to the inputs of inverters X704A, X704B, X704C, (7404) & X702D (7400). The inverters provide switching bias for drive transistors Q728, Q727, Q726, & Q729 (2N2222). The transistors provide logic drive outputs to the rear panel connector J8.

2-3. X703 converts the BCD input to a one-of-ten negative logic output. For example: if a BCD 7 is received on the inputs of X703 the 7 output line, pin 9, goes to a low logic state, and all other output lines remain high. Each of the output lines from X703 is connected to the inputs of two of the five 4-input NAND gates X710B, X711A, X711B, & X712B. These NAND gates are used to derive the 2-out-of-5 encoding from the decimal frequency information outputs of X703.

2-4. For each BCD input, one output goes low which drives the outputs of the corresponding NAND gates high. This biases the associated transistors ON which provide low impedances to ground thereby energizing the appropriate relays. Each relay connects a pin in the Remote Channeling Plug to the comm line J8 pin 11. The comm line may be connected to ground or to any voltage level required.

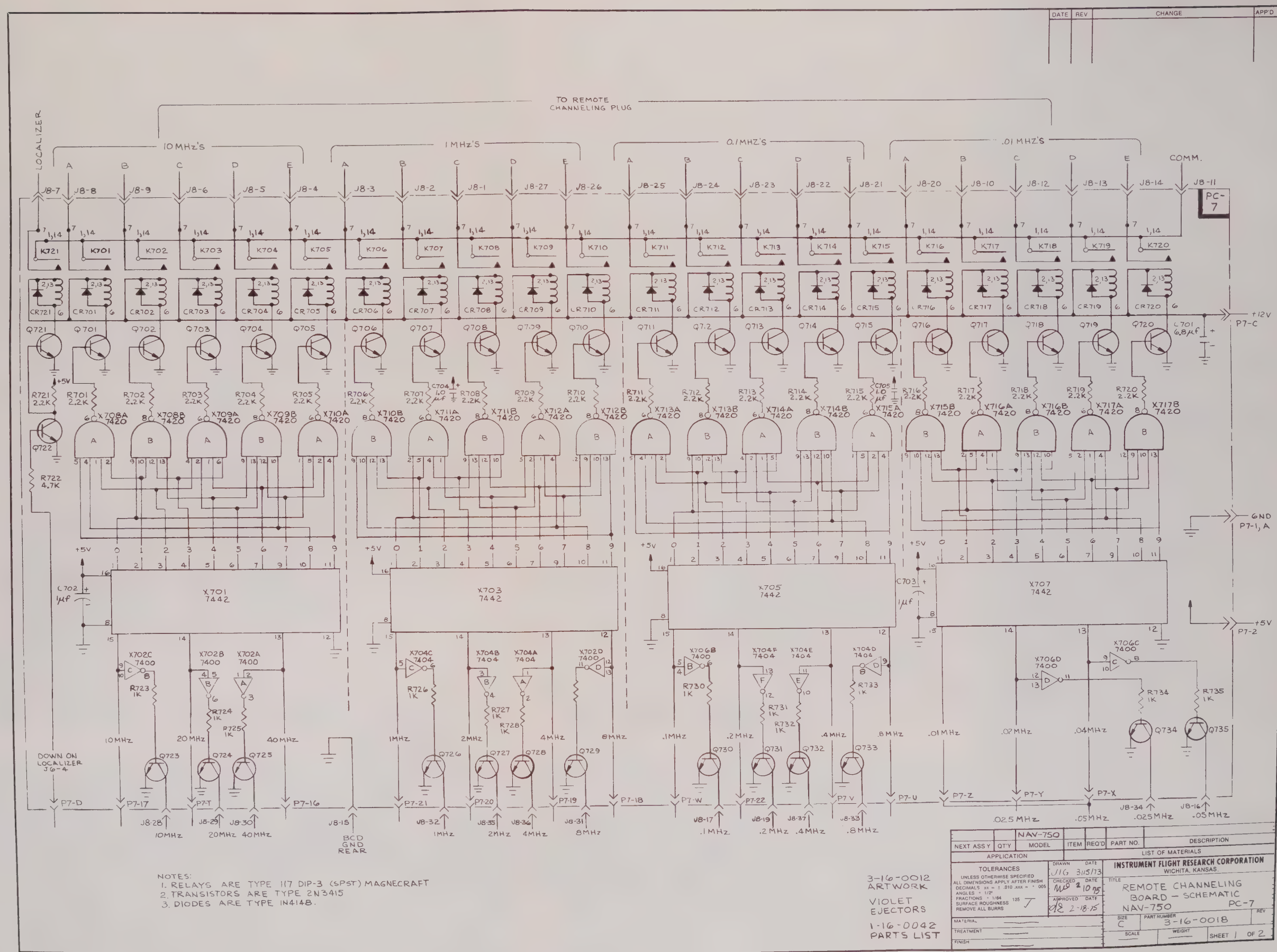
TO REMOTE CHANNELING PLUG
LOCALIZER
10MHz'S
1MHz'S
0.1MHz'S
.01MHz'S
COMM.
PC-7
+12V P7-C
GND P7-1, A
+5V P7-2
X701 7442
X703 7442
X705 7442
X707 7442
DOWN ON LOCALIZER J6-4
BCD GND REAR
NOTES:
1. RELAYS ARE TYPE 117 DIP-3 (SPST) MAGNECRAFT
2. TRANSISTORS ARE TYPE 2N3415
3. DIODES ARE TYPE IN4148.
3-16-0012 ARTWORK
VIOLET EJECTORS
1-16-0042 PARTS LIST
NAV-750
INSTRUMENT FLIGHT RESEARCH CORPORATION
WICHITA, KANSAS.
REMOTE CHANNELING BOARD – SCHEMATIC
NAV-750 PC-7
3-16-0018
SHEET 1 OF 2

Fig. 8-23

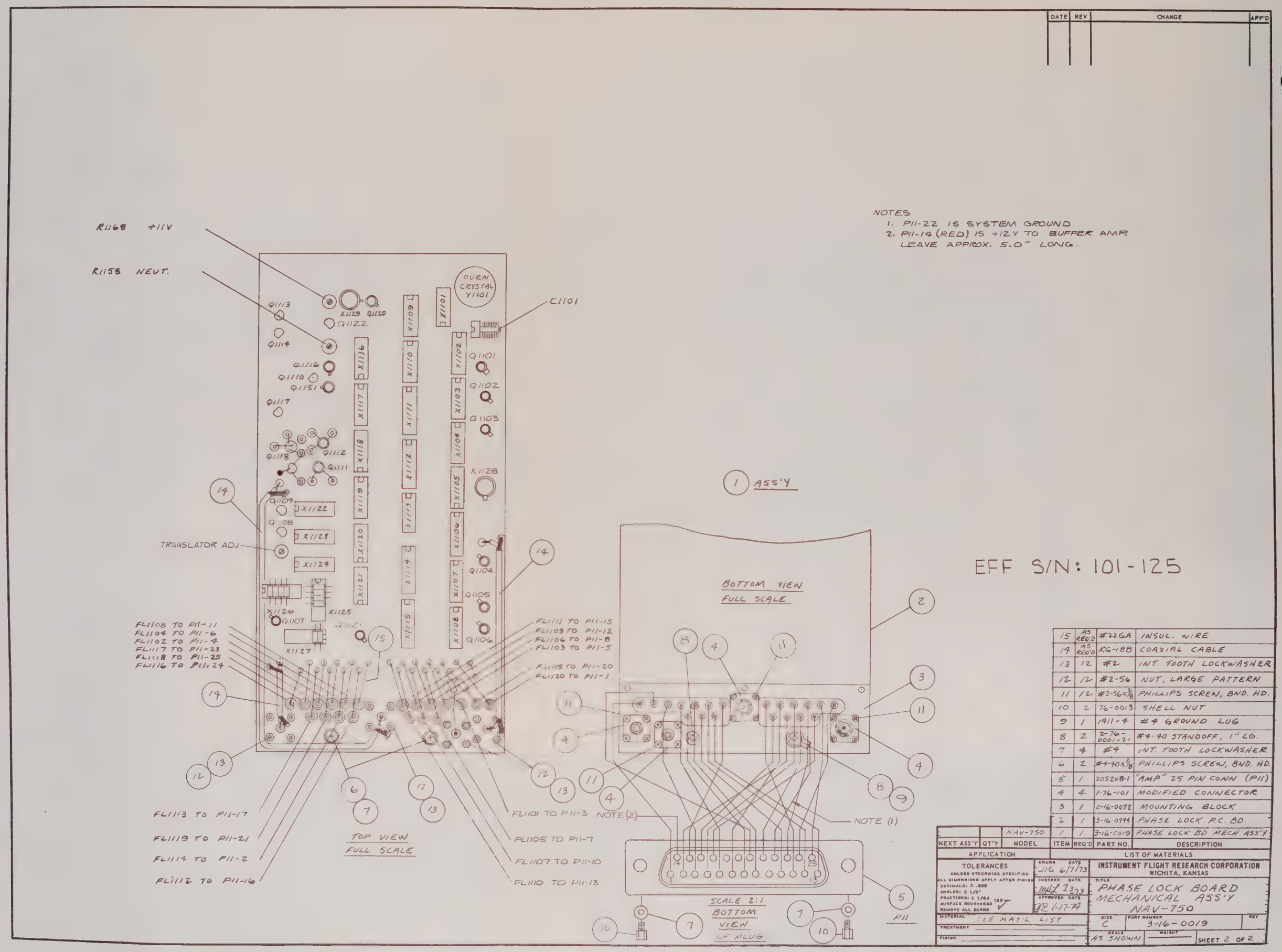

DATE
REV
CHANGE
APP'D
NOTES
1. P11-22 IS SYSTEM GROUND
2. P11-14 (RED) IS +12V TO BUFFER AMP. LEAVE APPROX. 5.0" LONG.
R1168 +11V
R1158 NEUT.
OVEN CRYSTAL Y1101
C1101
TRANSLATOR ADJ
FL1108 TO P11-11
FL1104 TO P11-6
FL1102 TO P11-4
FL1117 TO P11-23
FL1118 TO P11-25
FL1116 TO P11-24
FL1111 TO P11-15
FL1109 TO P11-12
FL1106 TO P11-8
FL1103 TO P11-5
FL1115 TO P11-20
FL1120 TO P11-1
FL1113 TO P11-17
FL1119 TO P11-21
FL1114 TO P11-2
FL1112 TO P11-16
FL1101 TO P11-3
FL1105 TO P11-7
FL1107 TO P11-10
FL1110 TO P11-13
TOP VIEW FULL SCALE
1 ASS'Y
BOTTOM VIEW FULL SCALE
NOTE (2)
NOTE (1)
SCALE 2:1 BOTTOM VIEW OF PLUG
P11
EFF S/N: 101-125
15 AS REQ'D #22GA INSUL. WIRE
14 AS REQ'D RG-188 COAXIAL CABLE
13 12 #2 INT. TOOTH LOCKWASHER
12 12 #2-56 NUT, LARGE PATTERN
11 12 #2-56x3/8 PHILLIPS SCREW, BND. HD.
10 2 76-0013 SHELL NUT
9 1 1411-4 #4 GROUND LUG
8 2 2-76-0001-21 #4-40 STANDOFF, 1" LG.
7 4 #4 INT. TOOTH LOCKWASHER
6 2 #4-40x3/8 PHILLIPS SCREW, BND. HD.
5 1 205208-1 "AMP" 25 PIN CONN (P11)
4 4 1-76-101 MODIFIED CONNECTOR
3 1 2-16-0072 MOUNTING BLOCK
2 1 3-16-0944 PHASE LOCK P.C. BD.
1 1 3-16-0019 PHASE LOCK BD MECH ASS'Y
NEXT ASS'Y QT'Y MODEL NAV-750
APPLICATION
ITEM REQ'D PART NO. DESCRIPTION
LIST OF MATERIALS
TOLERANCES
UNLESS OTHERWISE SPECIFIED
ALL DIMENSIONS APPLY AFTER FINISH
DECIMALS: ± .005
ANGLES: ± 1/2°
FRACTIONS: ± 1/64
SURFACE ROUGHNESS 125
REMOVE ALL BURRS
DRAWN JIG DATE 6/7/73
CHECKED MAL DATE 2/3/73
APPROVED DATE 1-17-74
MATERIAL SEE MAT'L LIST
TREATMENT
FINISH
INSTRUMENT FLIGHT RESEARCH CORPORATION
WICHITA, KANSAS
TITLE PHASE LOCK BOARD MECHANICAL ASS'Y NAV-750
SIZE C
PART NUMBER 3-16-0019
REV
SCALE AS SHOWN
WEIGHT
SHEET 2 OF 2

8-64 Fig. 8-24

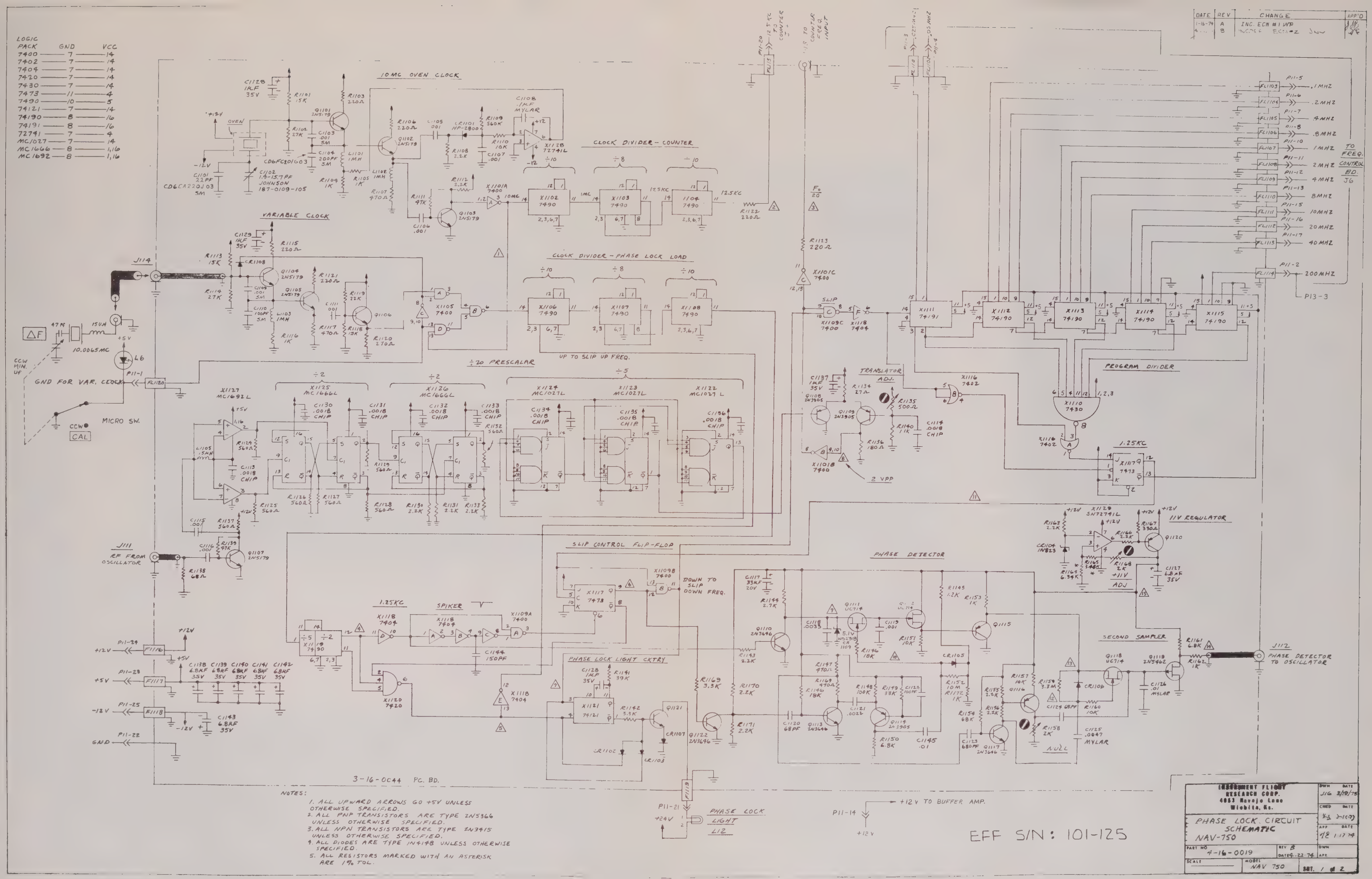
LOGIC PACK GND VCC
7400 7 14
7402 7 14
7404 7 14
7420 7 14
7430 7 14
7473 11 4
7490 10 5
74121 7 14
74190 8 16
74191 8 16
72741 7 4
MC1027 7 14
MC1666 8 1,16
MC1692 8 1,16
10MC OVEN CLOCK
CLOCK DIVIDER - COUNTER
VARIABLE CLOCK
CLOCK DIVIDER - PHASE LOCK LOAD
÷20 PRESCALAR
UP TO SLIP UP FREQ.
GND FOR VAR. CLOCK
MICRO SW.
RF FROM OSCILLATOR
SLIP CONTROL FLIP-FLOP
DOWN TO SLIP DOWN FREQ.
1.25KC
SPIKER
PHASE LOCK LIGHT CKTRY
PHASE DETECTOR
SECOND SAMPLER
11V REGULATOR
TRANSLATOR ADJ.
PROGRAM DIVIDER
2 VPP
TO FREQ. CONTROL BD. J6
PHASE DETECTOR TO OSCILLATOR
PHASE LOCK LIGHT L12
+12V TO BUFFER AMP.
3-16-0044 PC. BD.
NOTES:
1. ALL UPWARD ARROWS GO +5V UNLESS OTHERWISE SPECIFIED.
2. ALL PNP TRANSISTORS ARE TYPE 2N5366 UNLESS OTHERWISE SPECIFIED.
3. ALL NPN TRANSISTORS ARE TYPE 2N3415 UNLESS OTHERWISE SPECIFIED.
4. ALL DIODES ARE TYPE 1N4148 UNLESS OTHERWISE SPECIFIED.
5. ALL RESISTORS MARKED WITH AN ASTERISK ARE 1% TOL.
EFF S/N: 101-125
INSTRUMENT FLIGHT RESEARCH CORP.
4653 Navajo Lane
Wichita, Ks.
PHASE LOCK CIRCUIT SCHEMATIC
NAV-750
4-16-0019
NAV 750
SHT. 1 of 2

Fig. 8-25

DATE	REV	CHANGE	APP'D

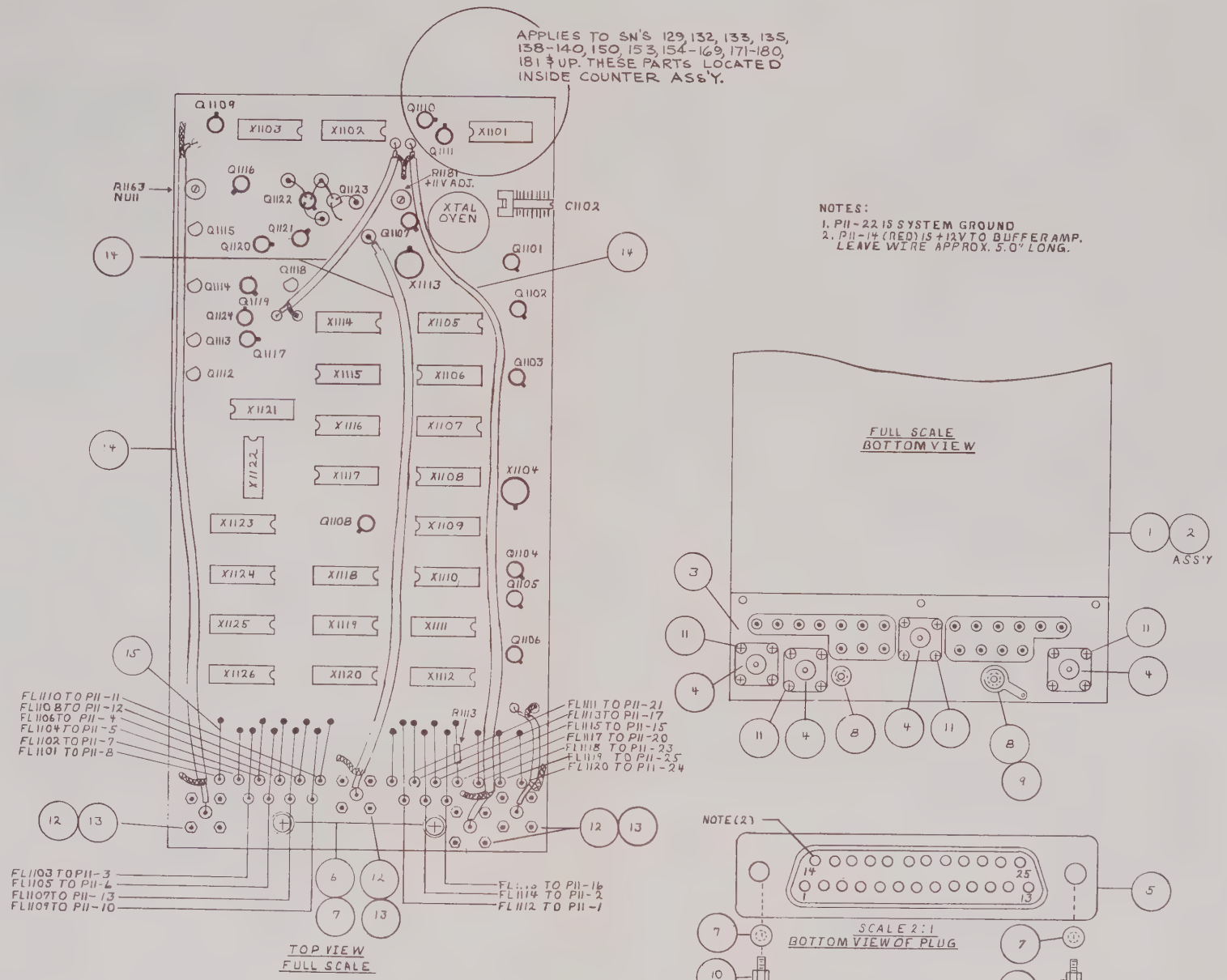

Eff: S/N 126-169, 171, 181, 182, & 183

ITEM	REQ'D	PART NO.	DESCRIPTION
15	AS REQ'D	#22GA	INSOL. WIRE
14	AS REQ'D	RG-188	COAXIAL CABLE
13	12	#2	INT TOOTH LOCKWASHER
12	12	#2-56	NUT, LARGE PATTERN
11	12	#2-56 x 3/16	PHMS
10	2	76-0013	SHELL NUT
9	1	1911-4	#4 GROUND LUG
8	2	2-76-0001-38	STANDOFF
7	4	#4	INT TOOTH LOCKWASHER
6	2	#4-40 x 3/16	PHMS
5	1	205208-1	25 PIN CONNECTOR
4	4	1-76-0101	MODIFIED CONNECTOR
3	1	2-16-0072	MOUNTING BLOCK
2	1	16-0176	PHASE LOCK P.C. BD
1	1	16-0202	PHASE LOCK BD. MECH ASS'Y
			PHASE LOCK BD MECH ASS'Y

NEXT ASS'Y | QT'Y | MODEL: NAV-750

APPLICATION

LIST OF MATERIALS

TOLERANCES
UNLESS OTHERWISE SPECIFIED
ALL DIMENSIONS APPLY AFTER FINISH
DECIMALS: .XX = ± .010 .XXX = ± .005
ANGLES: ± 1/2°
FRACTIONS: ± 1/64
SURFACE ROUGHNESS 125 ✓
REMOVE ALL BURRS

MATERIAL
TREATMENT
FINISH

DRAWN WP DATE 1-14-74
CHECKED DATE 2-21-75
APPROVED DATE 2-26-75

INSTRUMENT FLIGHT RESEARCH CORPORATION
WICHITA, KANSAS.

TITLE: 12.5kHz PHASE LOCK BOARD MECHANICAL ASS'Y

SIZE C | PART NUMBER 3-16-0206* | REV

SCALE AS SHOWN | WEIGHT | SHEET 3 OF 3

 Fig. 8-26 (Sheet 1 of 2)

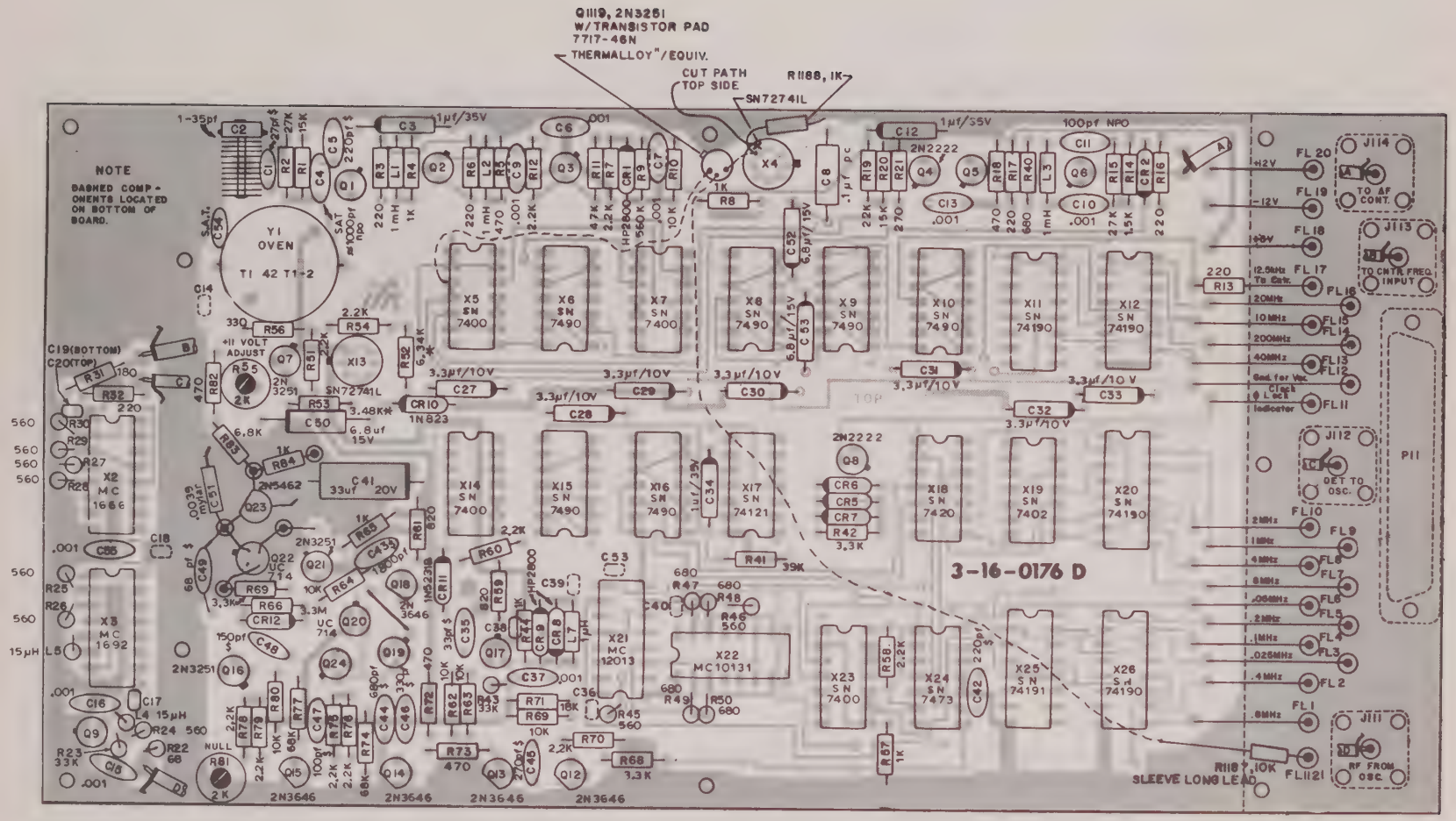

Fig. 8-26 12.5 kHz PHASE LOCK BOARD PARTS LAYOUT NAV-750/A
(Sheet 2 of 2)

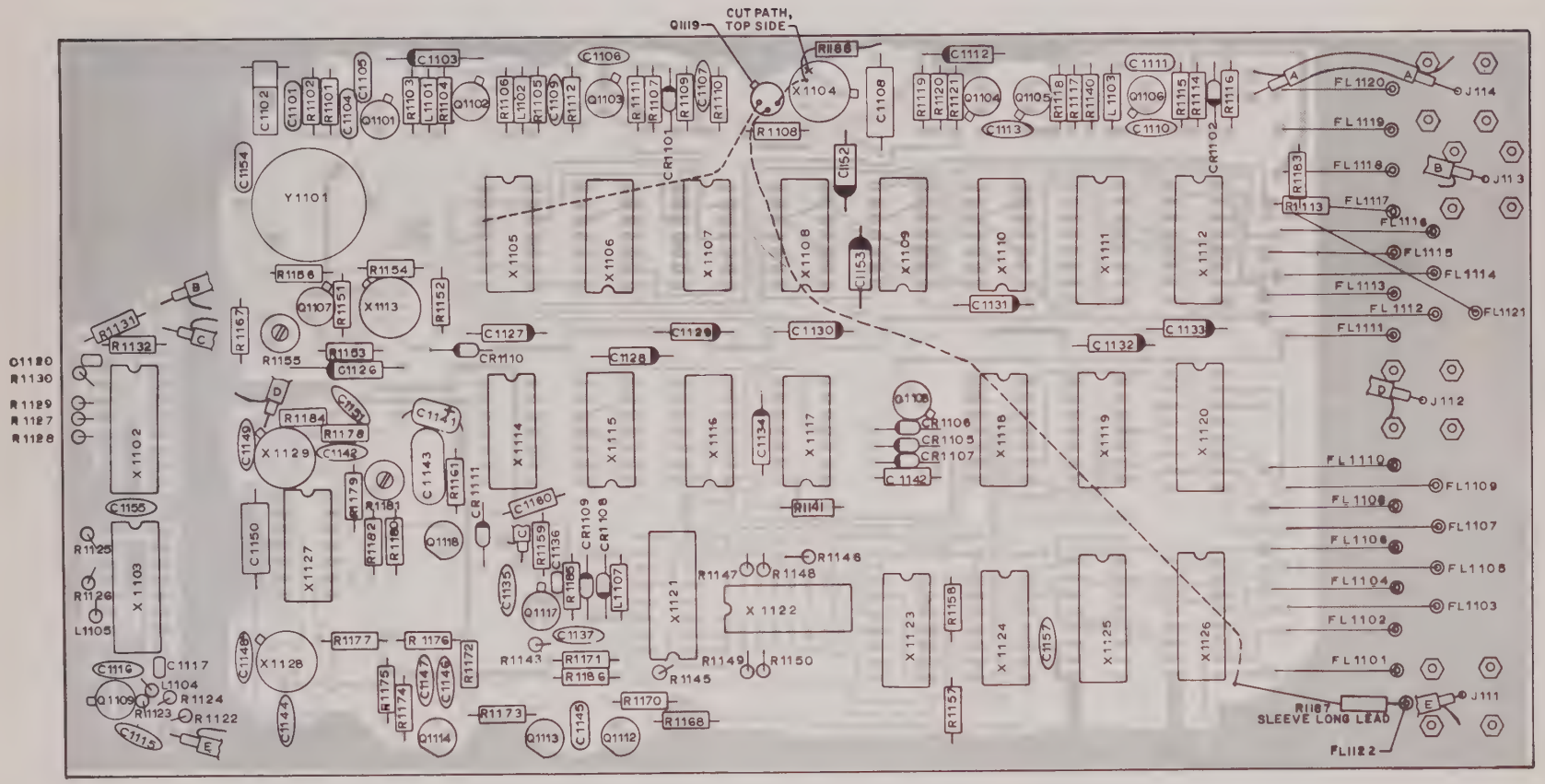

Fig. 8-27 12.5 kHz PHASE LOCK BOARD PARTS LAYOUT (NAV-750B)
(TOP VIEW)

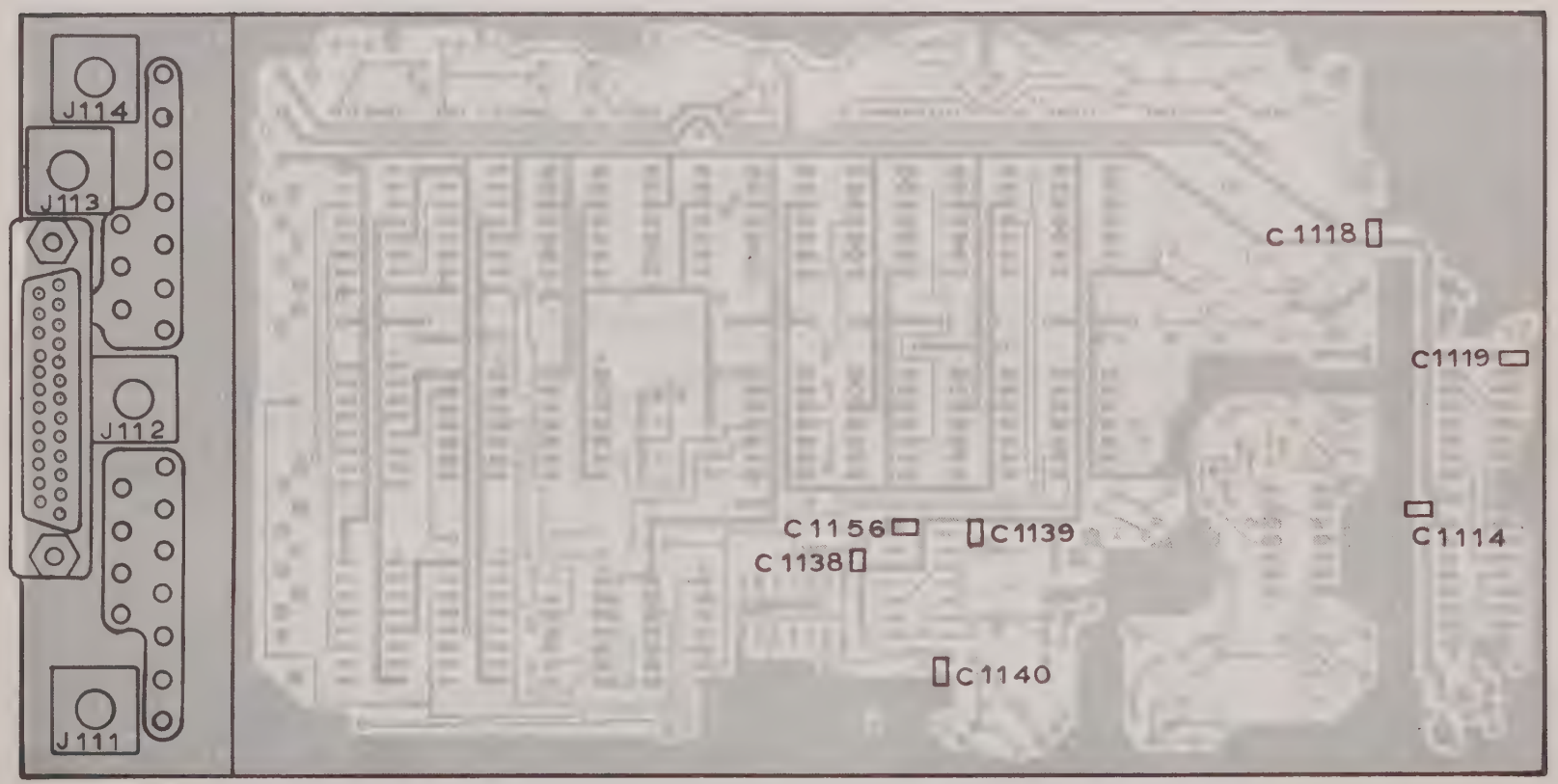

FIG. 8-27A 12.5 kHz PHASE-LOCK BOARD (NAV-750B) PARTS LAYOUT,
(BOTTOM VIEW)

12.5 kHz PHASE LOCK ASSEMBLY THEORY OF OPERATION

(NAV-750B)

3-16-0297

1-1. Introduction.

1-2. The 12.5 kHz Phase Lock Assembly accepts digital frequency selection information from the Frequency Control Board (PC-6) and samples the RF output from the Oscillator. This information is used to provide a phase locking frequency control voltage for the RF Oscillator Assembly. Variable tuning of the oscillator frequency may be accomplished by use of the ΔF CONTROL on the Front Panel. The 12.5 kHz Phase Lock Assembly also provides a 12.5 kHz reference signal and a RF signal to the Digital Display Assembly and controls the PHASE LOCK LIGHT (L12) and the ΔF INDICATOR LIGHT (L6) on the Front Panel.

2-1. 10 MHz Oscillator Operation.

2-2. The 10 MHz oven oscillator consists of Y1101 and Q1101 (66382). The 10 MHz crystal Y1101 is temperature stabilized by an oven. The oscillator may be adjusted to the exact frequency desired by C1102. Q1102 (66382) is used to buffer the output of Q1101. The output of Q1102 is also applied to a level control circuit consisting of CR1101 (HP2800) & X1104 (72741L).

2-3. With no output signal from Q1102, the anode of CR1101 is at a diode gap above ground. As the output of Q1102 increases, the anode of CR1101 is pulled lower. If the voltage on the anode of CR1101 is pulled below ground, the inverting (-) input of X1104 is also pulled to a negative voltage. With X1104 pin 2 negative, X1104 pin 6 goes positive and decreases the output of Q1101. C1152 & C1153 are used to suppress parasitic oscillations on X1104 pin 6. Q1103 (66382) converts the output of the 10 MHz oscillator to a TTL Compatible signal.

2-4. The output of Q1103 is applied to TTL buffer X1107 (7400) pins 12 & 13. The 10 MHz TTL clock output from X1107D pin 11 is applied to a divide-by-800 circuit consisting of X1108-X1110 (7490) and to NAND gate X1105D pin 12 (7400). X1108-X1110 are serially connected to produce the 12.5 kHz frequency clock input for the Digital Display Assembly.

2-5. When the STEP SWITCH, S33, is pressed; NAND gate X1105A (7400) pins 1 & 2 go low. This causes X1105A pin 3 to go high. At this time, CR1102 (1N4148) is reverse biased and the emitter-base junction of Q1119 (2N3251A) is forward biased. When S33 and the ΔF MICROSWITCH are closed Q1119 is biased to turn ON. This causes X1104 pins 3 & 6 to go high. With X1104 pin 6 high, Q1101 is biased to turn the 10 MHz Oscillator OFF. The 10 MHz Oscillator is turned OFF in order to prevent crosstalk between the 10 MHz Oscillator and the Variable Clock oscillator.

3-1. Variable Clock Operation.

3-2. When the ΔF CONTROL on the Front Panel is out of the detent, CAL, position; the ΔF MICROSWITCH is closed. At this time, the cathode of the ΔF INDICATOR, L6, is pulled to ground through the ΔF MICROSWITCH. This illuminates L6.

3-3. When the ΔF CONTROL on the Front Panel is in the CAL, detent position; X1105A pin 3 is at a low-logic level. This forward biases CR1102, which shunts the ΔF input of Q1106 to ground.

3-4. When the ΔF CONTROL is out of the CAL position, X1105A is at a high-logic level. This causes CR1102 to be reverse biased and allows the ΔF oscillator signal to be inputted by Q1106. The ΔF Oscillator consists of a 10.065 MHz crystal and associated components on the ΔF Assembly and the 12.5 kHz Phase Lock Board. Q1106 (66382) acts as the ΔF oscillator transistor. Q1104 (2N2222) & Q1105 (66382) are the buffer transistors for the ΔF Oscillator.

3-5. The output of the oscillator selected is gated through X1105B, X1105C & X1105D (7400) to the input of X1106 (7490). In the ΔF mode of operation, X1105D pin 13 is pulled to ground and X1105A pin 3 is high. At this time, the output from X1107D is not gated through X1105D and X1105D pin 11 is high. With X1105A pin 3 and X1105D pin 11 high, the output of Q1104 is gated through X1105B and X1105C to X1106 pin 14.

3-6. When the ΔF CONTROL is in the CAL position, X1105D pin 13 floats high and X1105A pin 3 is low. Since X1105A pin 3 is low, the output of Q1104 is not gated through X1105B and X1105B pin 6 is high. With X1105D pin 13 floating high and X1105B pin 6 high, the output of X1107D is gated through X1105D & X1105C to X1106 pin 14.

12.5 kHz PHASE LOCK ASSEMBLY THEORY OF OPERATION

4-1. Prescaler Operation.

4-2. RF energy from the output of the Oscillator Assembly is inputted onto the 12.5 kHz Phase Lock Board and buffered by Q1109 (66382). The output of Q1109 is applied to the inputs of an ECL phase splitter consisting of X1103A & X1103B (MC1692). The 180° out of phase outputs to the phase splitter are used to drive set-reset ECL Flip-Flops X1102B & X1102A (MC1666). When the clock input of X1102B or X1102A is high, the Q & $\overline{Q}$ outputs of the Flip-Flop take the same state as is present on it's set and reset inputs.

4-3. When the clock input to X1102B is high, the state of the set and reset inputs of X1102B is determined by the state of the Q and $\overline{Q}$ outputs of X1102A. The Q and $\overline{Q}$ outputs of X1102B are reversed and applied to the set and reset inputs of X1102A. When the state of the phase splitter changes, the clock input of X1102B goes low. At this time, the clock input of X1102A goes high. The outputs of X1102A are the inverse of the outputs of X1102B. This process continues and provides a signal one half of the RF input frequency on X1102A pins 3 & 2. The outputs of X1102A are applied to the input of the Prescaler in the Digital Display Assembly and to the input of Q1117 (66382).

5-1. Phase Lock Light Operation.

5-2. The clock output of X1105C is applied to X1106 pin 14. Normally X1106 divides the oscillator clock frequency by 10. The output of X1106 is further divided-by-80 by X1115 & X1116 (7490). The output of the counter is then applied to X1118 (7420) pins 5 & 4, X1107A pins 1 & 2 and to the clock input of the Slip Flip-Flop X1124A (7473). When the frequency from the RF Oscillator is not the frequency selected, a pulse or a low condition from the Slip Circuit causes one-shot X1117 to be triggered. X1117 then produces a low-logic level pulse on pin 1. This pulse causes Q1108 (2N2222) to turn OFF. With Q1108 OFF, the ground is removed from the PHASE LOCK LIGHT, L12.

5-3. If the RF frequency output from the RF Oscillator is out of phase lock for a period greater than the duration of the low-logic level pulse from X1117, CR1105 or CR1107 is forward biased by X1118A pin 6 or X1123B pin 6. At this time, Q1108 is biased to turn OFF. CR1106 (1N4148) holds the emitter of Q1108 a diode gap above ground and allows CR1105 or CR1107 to turn Q1108 OFF.

12.5 kHz PHASE LOCK ASSEMBLY THEORY OF OPERATION

6-1. Program Divider Operation.

6-2. The RF input, from the Oscillator Assembly, is divided-by-2 by X1102A & X1102B and applied to the base of buffer transistor Q1117 (66382). The output of Q1117 is then applied to the clock input of X1121. X1121 is an ECL divide-by-10 or 11 counter. Because the voltage swing of an ECL logic transition is small, about 0.85V typ.; the clock input line X1121 pin 15 is tied to the biasing reference voltage X1121 pin 14. Typical logic levels for ECL are, -1.75V for low logic levels and -0.9V for high logic levels. L1107 is used to block RF energy from X1121 pin 14. CR1108 & CR1108 (HP2800) are clipping diodes which limit the amplitude of the input signal swing to ± a diode gap of the reference voltage V_{bb} on X1121 pin 14.

6-3. X1121, X1122A & X1122B form a divide-by-40 or 41 counter. X1121 is controlled by the Q outputs of X1122A & X1122B. When Q of X1122A and Q of X1122B are both down, X1121 divides-by-11. When Q of X1122A and/or Q of X1122B is high X1121 divides-by-10. Noramlly, X1121 divides-by-11 for 1 out of every 4 counting cycles.

6-4. The number of times X1121, X1122A & X1122B divide-by-41 is also controlled by X1125 (74191) and by X1126 (74190). X1125 & X1126 are loaded by frequency command signals from the Frequency Control Board (PC-6). X1125 & X1126 program X1121, X1122A & X1122B so that every clock output pulse on X1121 pin 7 will correspond to 1 MHz of the desired frequency, when the RF output from the Oscillator Assembly is phase locked. In order to accomplish this, NAND gates X1123A & X1123C monitor X1125 pin 2 and X1126 (74190) pin 12; and X1119B monitors X1125 pin 3. When X1125 pin 3 goes high and/or X1125 pin 2 and X1126 pin 12 are not high simultaneously, X1119B pin 4 goes low. When this happens, if Q of X1122A and/or Q of X1122B are not high; X1121, X1122A & X1122B divide the RF signal input from X1102A & X1102B by 41, instead of 40. When X1125 & X1126 reach a count of zero X1119B pin 4 goes high. X1125 pin 3 is connected directly to X1119B pin 6 to minimize propagation delay of the least-significant-digit output from X11125. This is done to prevent X1121 from dividing by 11 when X1125 & X1126 reach a count of zero. This high condition on X1119B pin 4 also causes the enable input of X1125 to go high until X1125, X1126, X1120, X1112 & X1111 are reset by X1124B.

6-5. The output of X1121 pin 7 is applied to the input of serially-connected, down-counters X1120, X1111 & X1112 (7490). X1120, X1111 and X1112 are loaded with BCD frequency selection data from the Frequency Select Board. X1119C monitors X1120 pins 6 & 7. Pin 10 of X1119C is at a low logic level until X1120 pins 6 & 7 go low. At this time, X1119C pin 10 goes high. X1118B (7420) monitors X1120 pin 2 and the max-min lines of X1112 & X111.

6-6. X1119C, X1118B, and X1119D form a look-ahead circuit of X1124B (7473). Two counts before a zero count on the counters, X1111 pin 12, X1112 pin 12 and X1120 pin 2 are high. At this time, X1119C pin 10 is high. This causes X1124B pin 14 to go high.

6-7. At one count before a zero count on the counters, X1124B takes a downward transition. At this time, Q of X1124B goes high and $\overline{Q}$ of X1124B goes low. $\overline{Q}$ from X1124B pin 13 pulls the load line of X1126, X1125, X1120, X1112, & X1111 down, and allows the counter to load the frequency selection data from the Frequency Control Board. This also resets the enable line to X1125, allowing it to begin counting on the next clock pulse from X1121 pin 7. The high level of X1124B pin 12 is applied to X1211 pin 9 and causes X1121 to divide-by-10 until Q again goes low. This happens on the next clock pulse from X1121 pin 7. Q from X1124B is also applied to the reset pin of the Slip Flip-Flop X1124A.

7-1. Slip Circuit Operation.

7-2. When the program divider output from X1124B pin 12 is running at a frequency much lower than the reference frequency from X1116 pin 12, the Slip Flip-Flop has not been reset when a pulse is outputted on X1116 pin 12. At this time, Q of X1124A is high and $\overline{Q}$ of X1124A is low. When this happens, X1118A (7420) pin 6 goes low. This low condition on X1118A pin 6 turns OFF the PHASE LOCK LIGHT and causes X1107C pin 8 to go high. With X1107C pin 8 high, X1106C stops counting until a reset pulse is received on X1124A pin 6. This high-logic level on X1116 pin 12 causes the Phase Detector output to the Oscillator to slew the Oscillator frequency up to the frequency desired.

7-3. When the program divider output frequency from X1124B pin 12 is much higher than the reference frequency from X1116 pin 12, Slip Flip-Flop X1124A and NAND gate X1123B receive a reset pulse, of short duration, before a clock pulse has been received on X1124A pin 5. This causes Q of X1124A to go low and $\overline{Q}$ of X1124A to go high. At this time, X1123B pin 6 goes low. With X1123B pin 6 low, X1117 is triggered

to turn the PHASE LOCK LIGHT OFF and to cause X1114C pin 3 to go high. The high state on X1114C pin 3 keeps the Program Divider from counting until X1124A is toggled by a clock pulse from X1116 pin 12. At this time, the Phase Detector causes the RF Oscillator to slew the Oscillator frequency down to the frequency desired.

8-1. Phase Detector Operation.

8-2. The Phase Detector Circuit operates as a sample and hold circuit. A positive going reference clock pulse from X1116 pin 12 is inverted by X1107A (7400) and conditioned by Q1118 (2N3646), CR1111 (1N5231B) and C1143. This results in a positive going +5V pulse with a fast fall-time. This pulse has a sloping rise-time that is partially exponential due to C1143.

8-3. The $\overline{Q}$ output from X1124A pin 8 is used as the sampled pulse for the Phase detector. When the sample pulse causes the base of Q1112 (2N3646) to go high, the collector of Q1112 does down. This causes the collector of Q1113 to go up for a short time, as determined by R1117 & C1145. The pulse from Q1113 causes the sloping leading-edge of the pulse from Q1118 to be sampled. This sampled portion of the pulse from Q1118 is stored as a voltage by C1144. The voltage stored is dependant upon the point at which the leading-edge of the pulse from Q1118 is sampled. This in turn is dependant upon the frequency of the RF inputted from the Oscillator.

8-4. This stored voltage on C1144 is buffered by FET input op amp X1128 (CA3130). The output of X1128 is sampled by Q1114 (2N3646), X1127B (CD4066) and X1127A (CD4066). The pulse is sampled during a time when a glitch, which is due to the relatively wide first sampling pulse, is not present. This removes the glitch and has the effect of making the portion of the reference pulse leading-edge sampled negligable with respect the rise-time of the leading-edge of the reference pulse.

8-5. This sampled voltage is stored by C1150 and buffered by FET input op amp X1129 (CA3130). The output of X1129 is applied to the RF Oscillator and is used to slew the Oscillator to the desired frequency. X1127D is complimentary switched from the sampled pulse. This produces a voltage on the wiper of R1181 that varies above or below 5.5V depending upon the status of X1127B. This voltage is applied to the output of X1127A, via C1142, to neutralize any capacitance effects from X1127A. The amount of voltage swing present on C1142 may be adjusted by the use of R1181.

12.5 kHz PHASE LOCK ASSEMBLY THEORY OF OPERATION

9-1. +11V Supply Operation.

9-2. The +11V supply is generated by X1113 (72741L), Q1107 (2N5366), CR1110 (1N823) and associated components. X1113 functions as a voltage comparator. X1103 compares a reference voltage from R1151 and zener diode CR1110, of about 6.2 volts, to the output voltage as seen through a voltage divider. If a voltage differential exists between pins 2 & 3 of X1113, a correction voltage is generated. This correction voltage causes the bias on current limiting transistor Q1107 to change. This bias on Q1107 controls the output voltage of the +11V regulator. R1155 is used to adjust the output to the desired voltage.

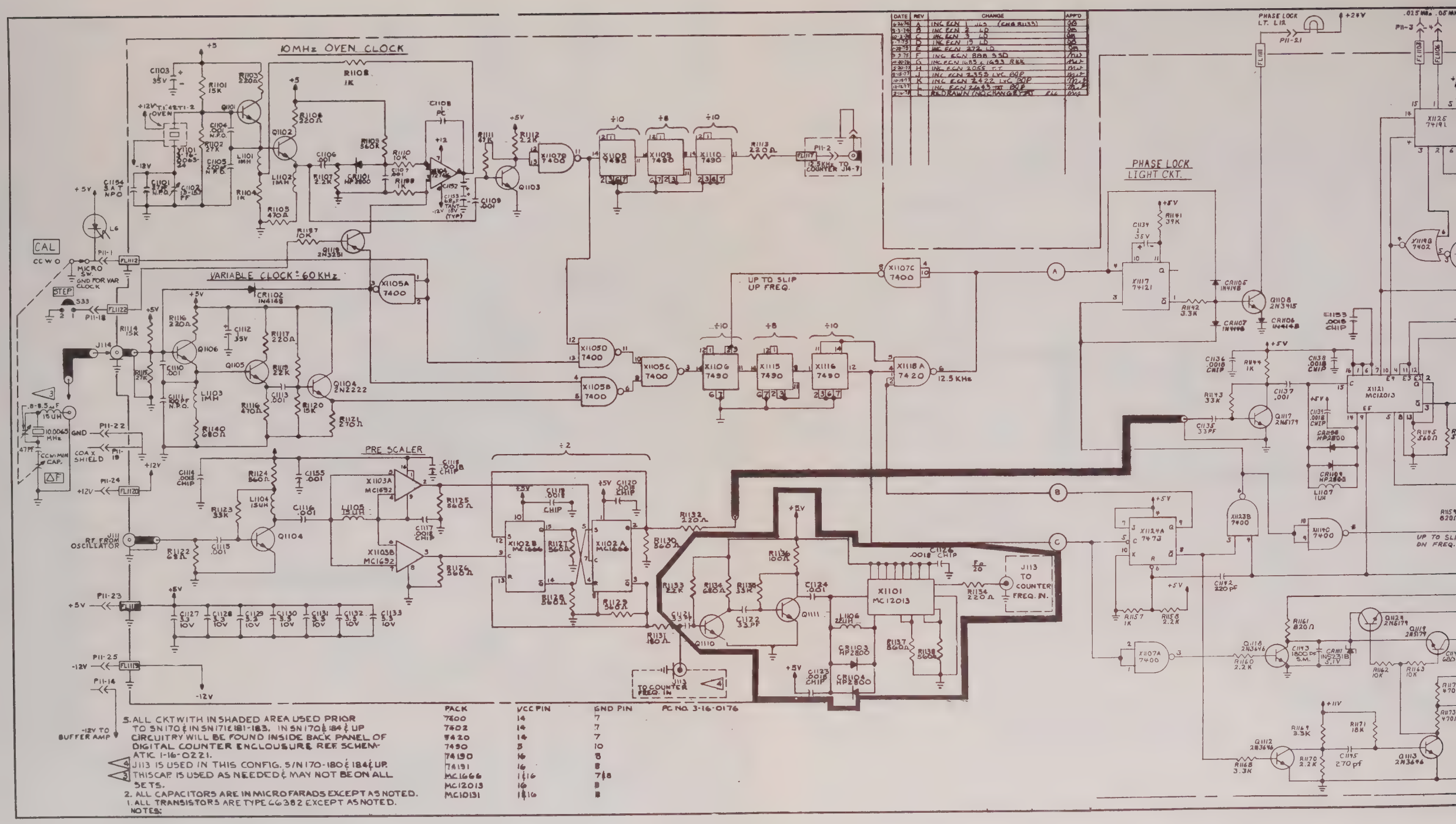

DATE	REV	CHANGE	APP'D
6-26-74	A	INC ECN 1 JLS (CNG R1133)	GB
3-3-74	B	INC ECN 2 LD	GB
10-3-74	C	INC ECN 3 LD	GB
7-7-75	D	INC ECN 19 LD	GB
7-28-75	E	INC ECN 272 LD	GB
9-3-75	F	INC ECN 888 SSD	MW
10-30-76	G	INC ECN 1685 & 1693 RKK	MW
5-20-77	H	INC ECN 2055 T.T.	MW
8-15-77	J	INC ECN 2353 LVC BOP	MW
10-15-77	K	INC ECN 2422 LVC BOP	MW
12-12-77	L	INC ECN 2643 TAT BOP	MW
2-16-78	L	REDRAWN (NO CHANGE) TAT RLC	MW

5. ALL CKT WITH IN SHADED AREA USED PRIOR TO SN170 & IN SN171 & 181-183. IN SN170 & 184 & UP CIRCUITRY WILL BE FOUND INSIDE BACK PANEL OF DIGITAL COUNTER ENCLOUSURE REF. SCHEMATIC 1-16-0221.
4. J113 IS USED IN THIS CONFIG. S/N 170-180 & 184 & UP.
3. THIS CAP. IS USED AS NEEDED & MAY NOT BE ON ALL SETS.
2. ALL CAPACITORS ARE IN MICROFARADS EXCEPT AS NOTED.
1. ALL TRANSISTORS ARE TYPE 66382 EXCEPT AS NOTED.

NOTES:

PACK	VCC PIN	GND PIN
7400	14	7
7402	14	7
7420	14	7
7490	5	10
74190	16	8
74191	16	8
MC1666	1 & 16	7 & 8
MC12013	16	8
MC10131	1 & 16	8

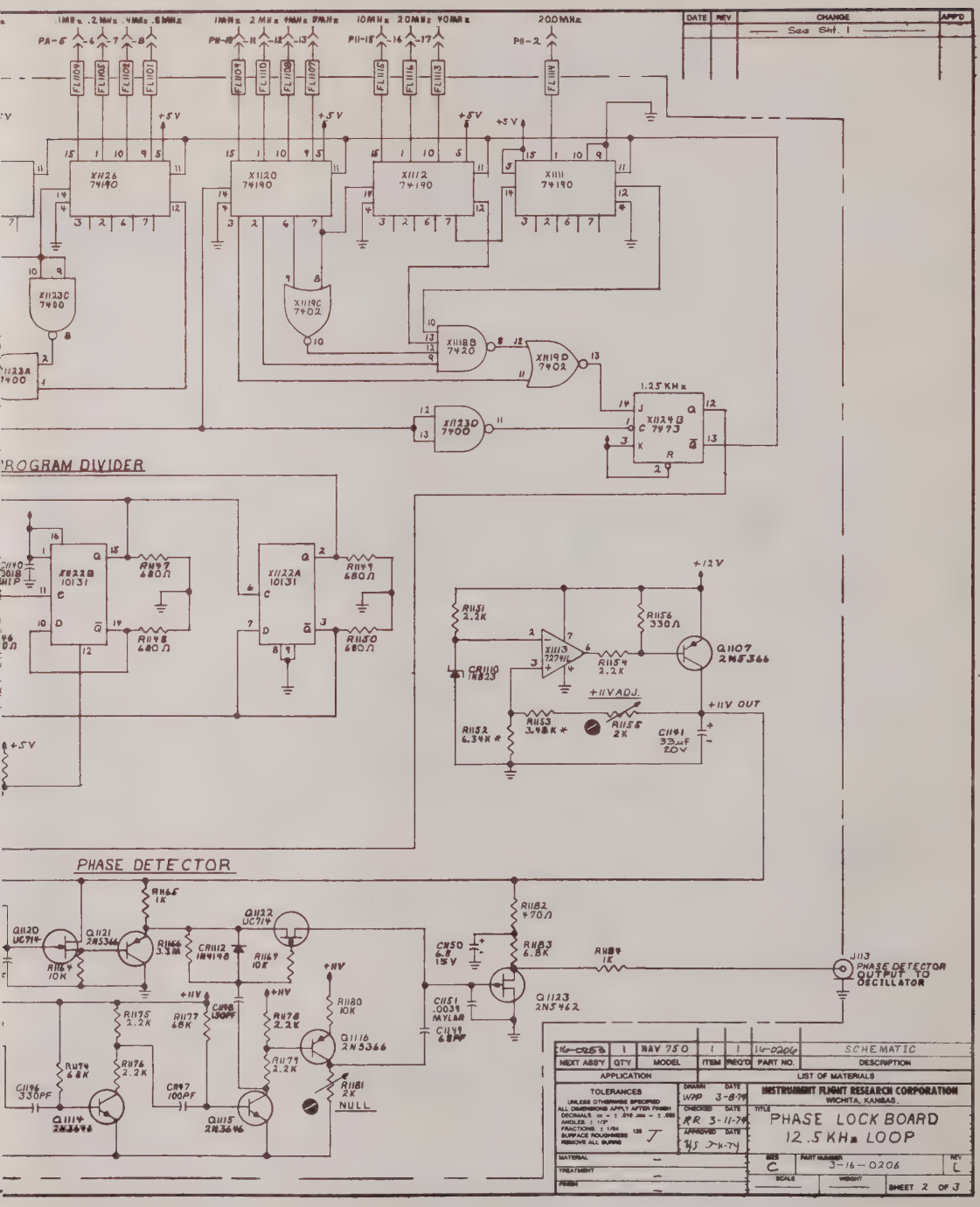
PROGRAM DIVIDER
PHASE DETECTOR
+5V
+12V
+11V OUT
+11V ADJ.
1.25 KHz
PHASE DETECTOR OUTPUT TO OSCILLATOR
NULL
SCHEMATIC
PHASE LOCK BOARD
12.5 KHz LOOP
INSTRUMENT FLIGHT RESEARCH CORPORATION
WICHITA, KANSAS.
3-16-0206

Fig. 8-28 8-79

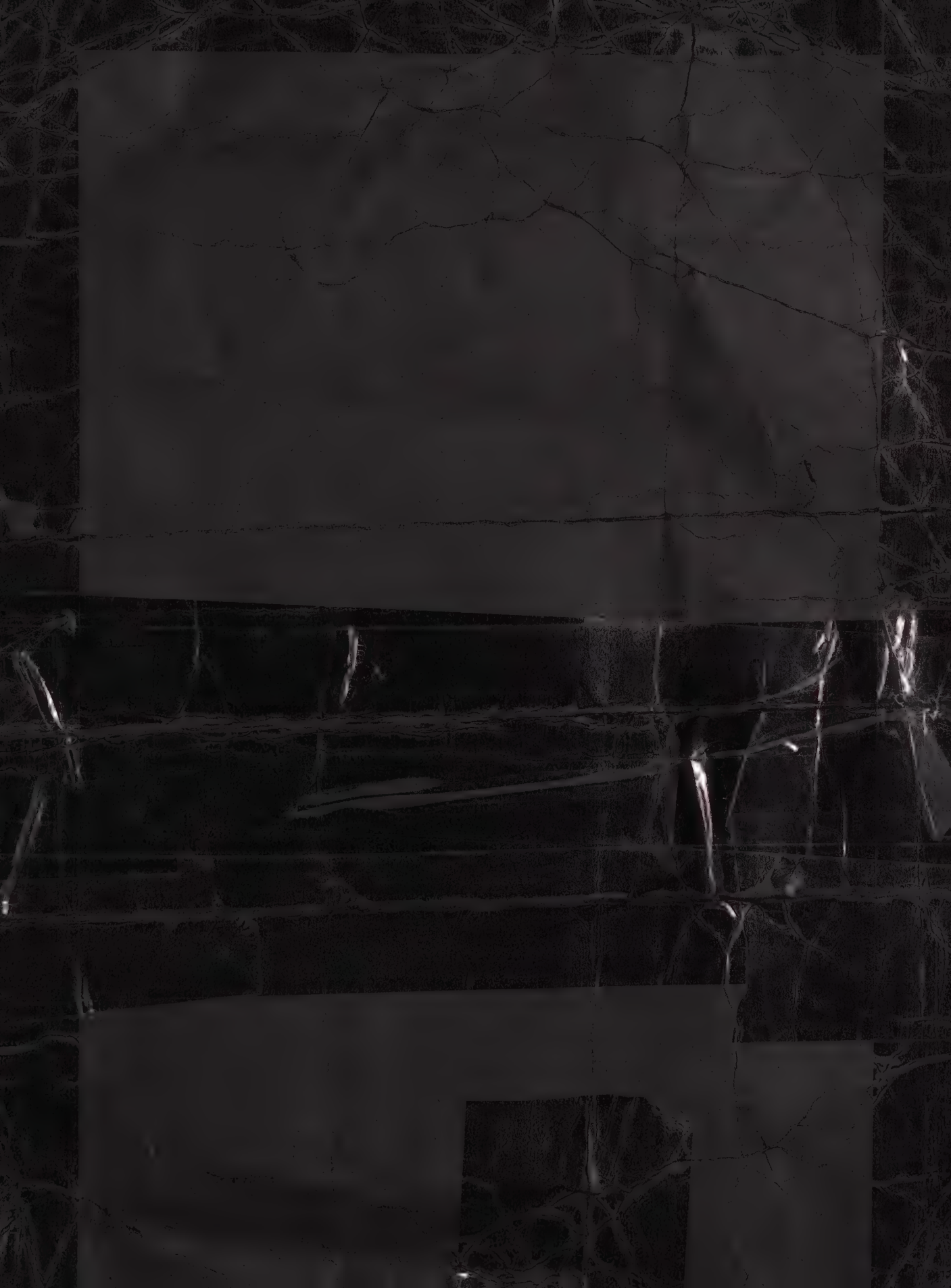

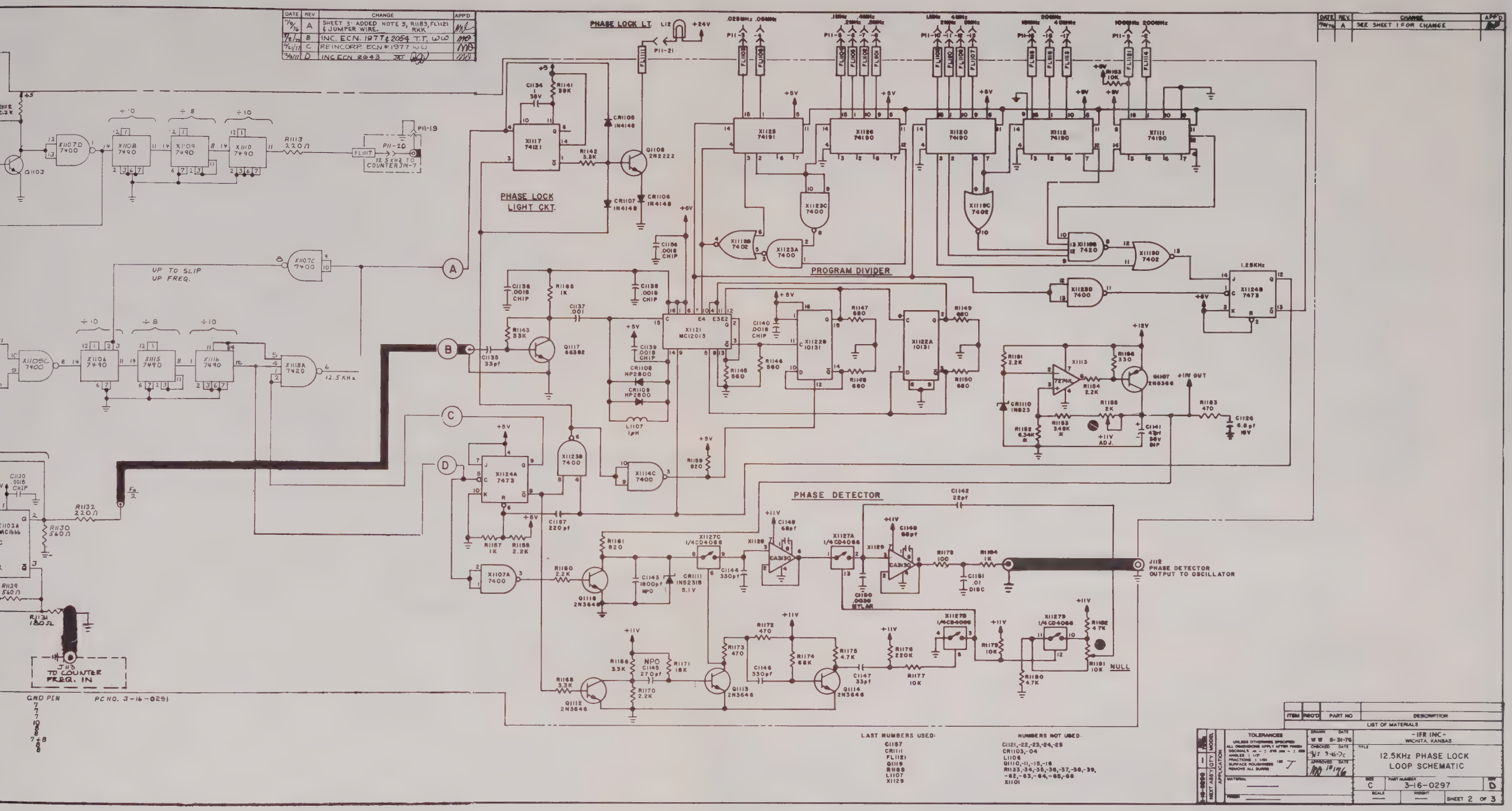
PHASE LOCK LT.
PHASE LOCK LIGHT CKT.
PROGRAM DIVIDER
PHASE DETECTOR
UP TO SLIP
UP FREQ.
12.5 KHz
J112 PHASE DETECTOR OUTPUT TO OSCILLATOR
J113 TO COUNTER FREQ. IN
NULL
LAST NUMBERS USED:
NUMBERS NOT USED:
LIST OF MATERIALS
-IFR INC-
WICHITA, KANSAS
12.5KHz PHASE LOCK
LOOP SCHEMATIC
3-16-0297
SHEET 2 OF 3

8-80 Fig. 8-29

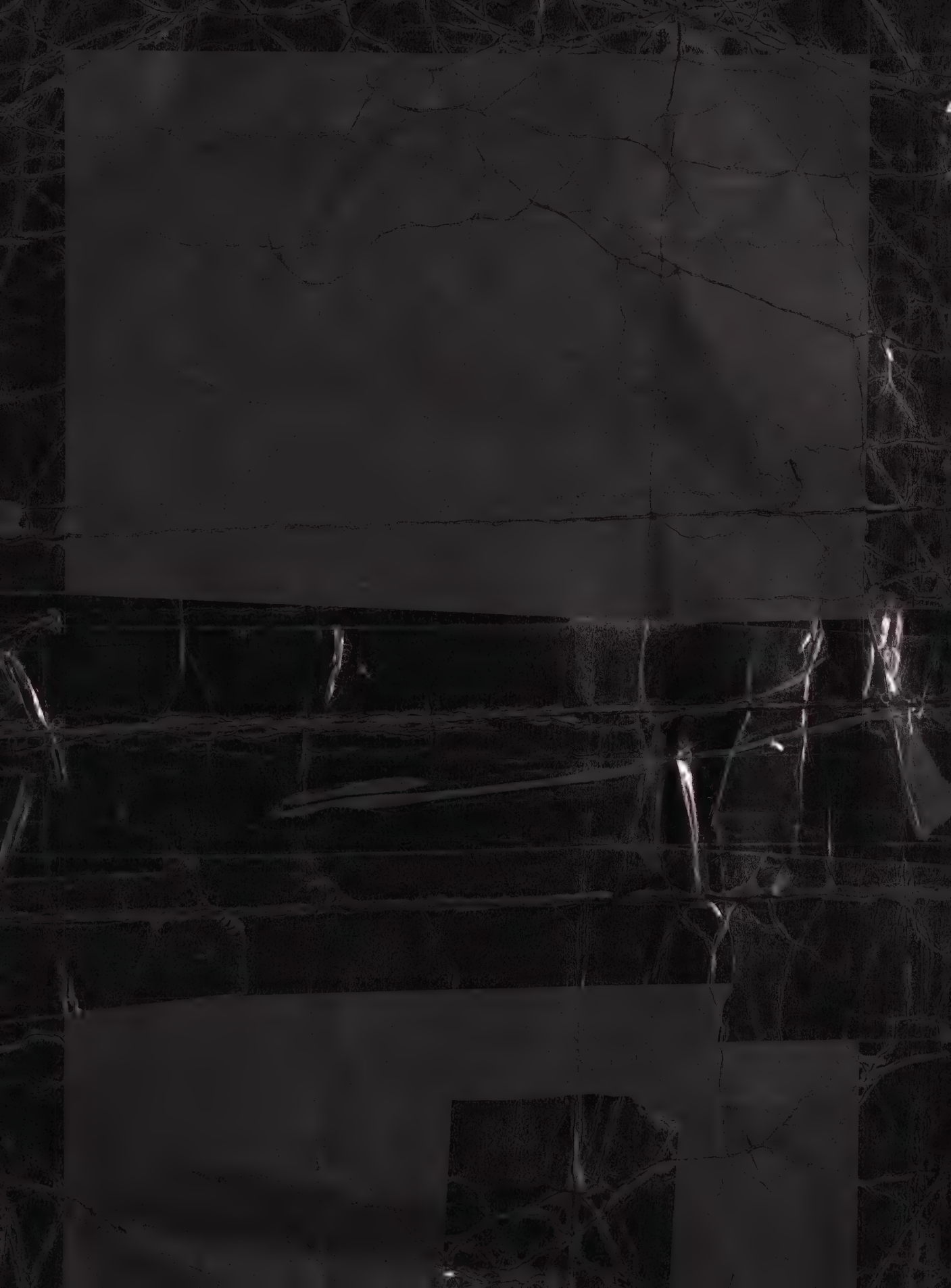

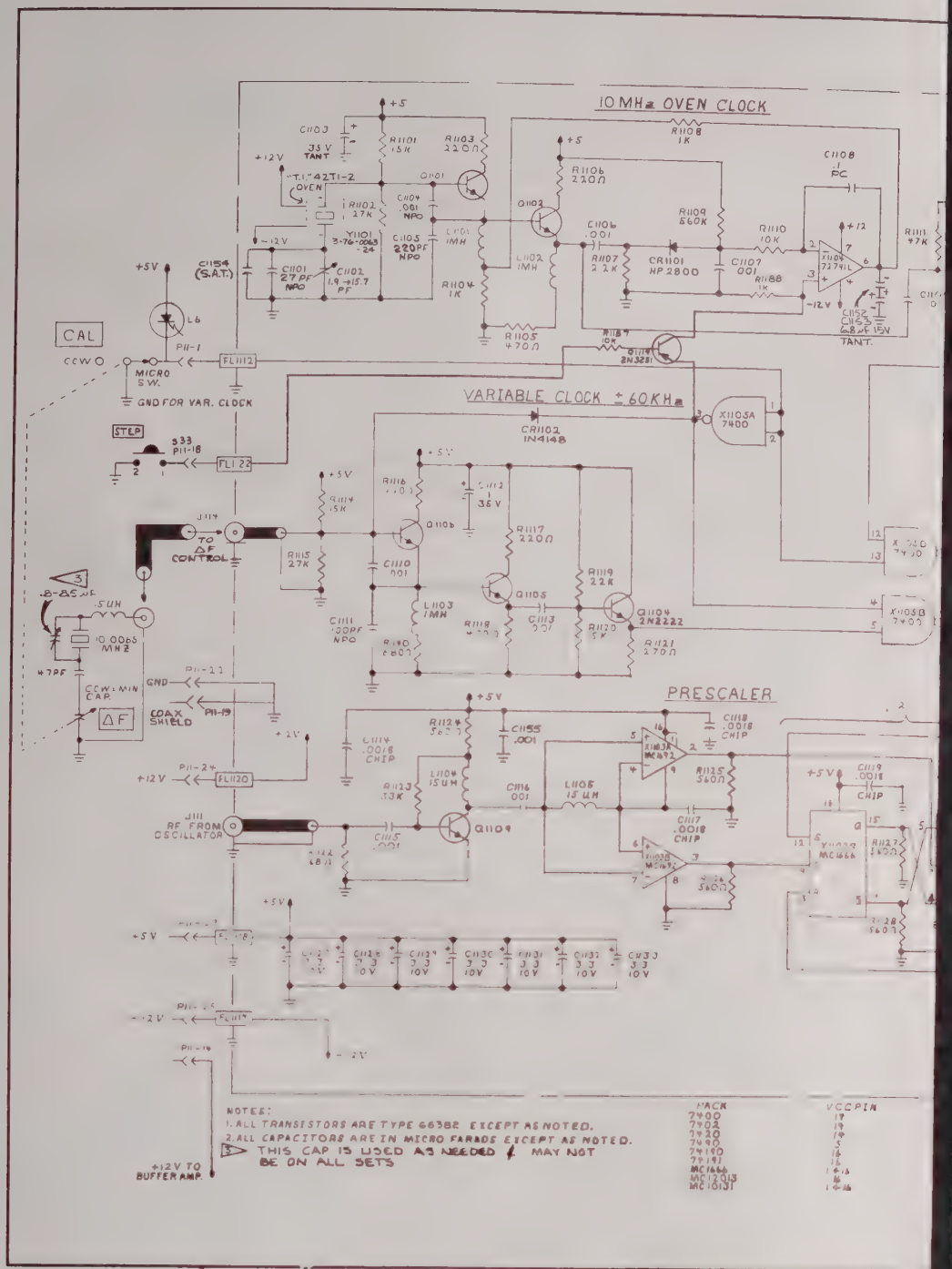
10 MHz OVEN CLOCK
VARIABLE CLOCK ± 60KHz
PRESCALER
CAL
CCW
MICRO SW.
GND FOR VAR. CLOCK
STEP
TO ΔF CONTROL
RF FROM OSCILLATOR
COAX SHIELD
CCW = MIN CAP
ΔF
+12V TO BUFFER AMP.
NOTES:
1. ALL TRANSISTORS ARE TYPE 6638E EXCEPT AS NOTED.
2. ALL CAPACITORS ARE IN MICRO FARADS EXCEPT AS NOTED.
THIS CAP IS USED AS NEEDED & MAY NOT BE ON ALL SETS
PACK
VCC PIN
7400
7402
7420
7490
74190
74191
MC1666
MC12013
MC10131

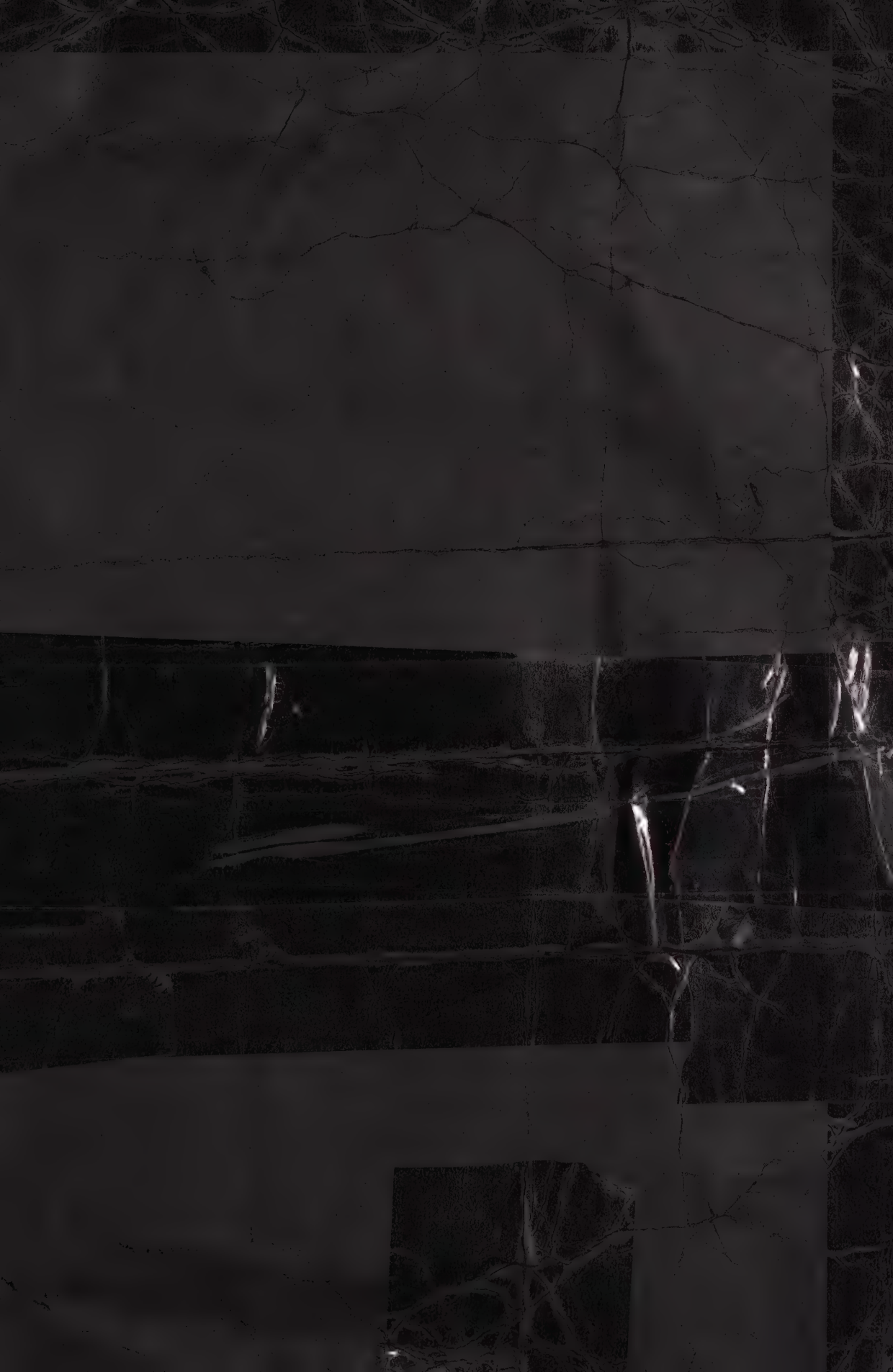

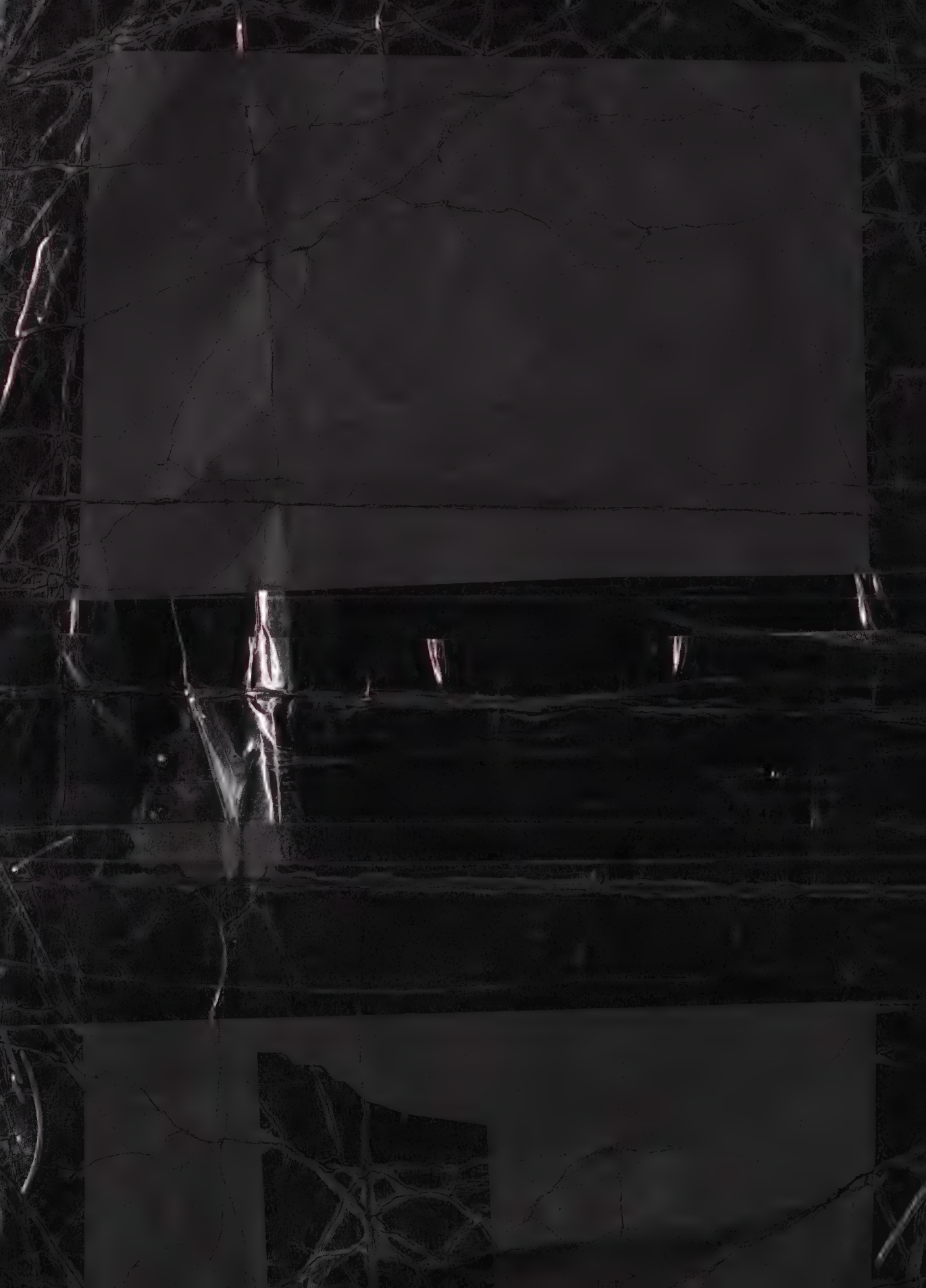

PRESCALER BOARD PARTS LAYOUT

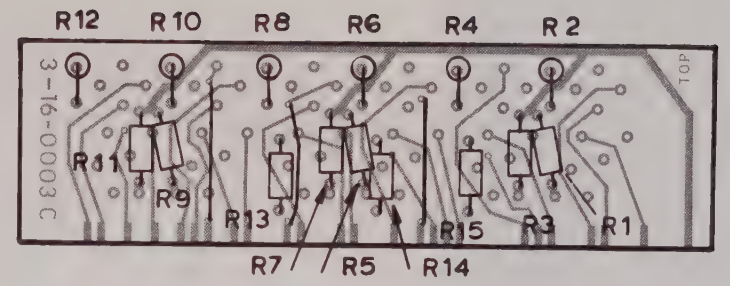

DIGITAL DISPLAY BOARD PARTS LAYOUT

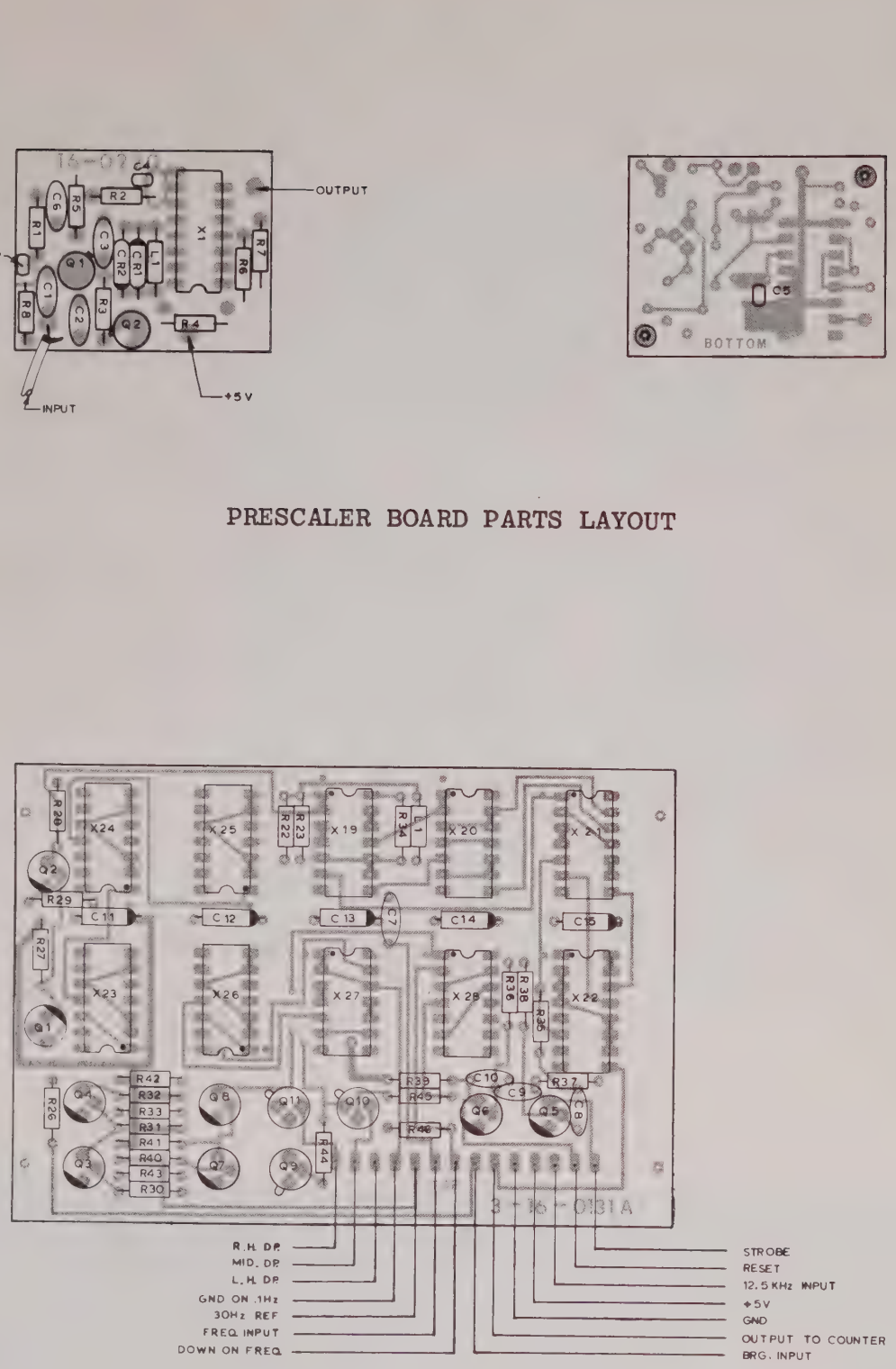

DIGITAL READOUT GATING BOARD PARTS LAYOUT

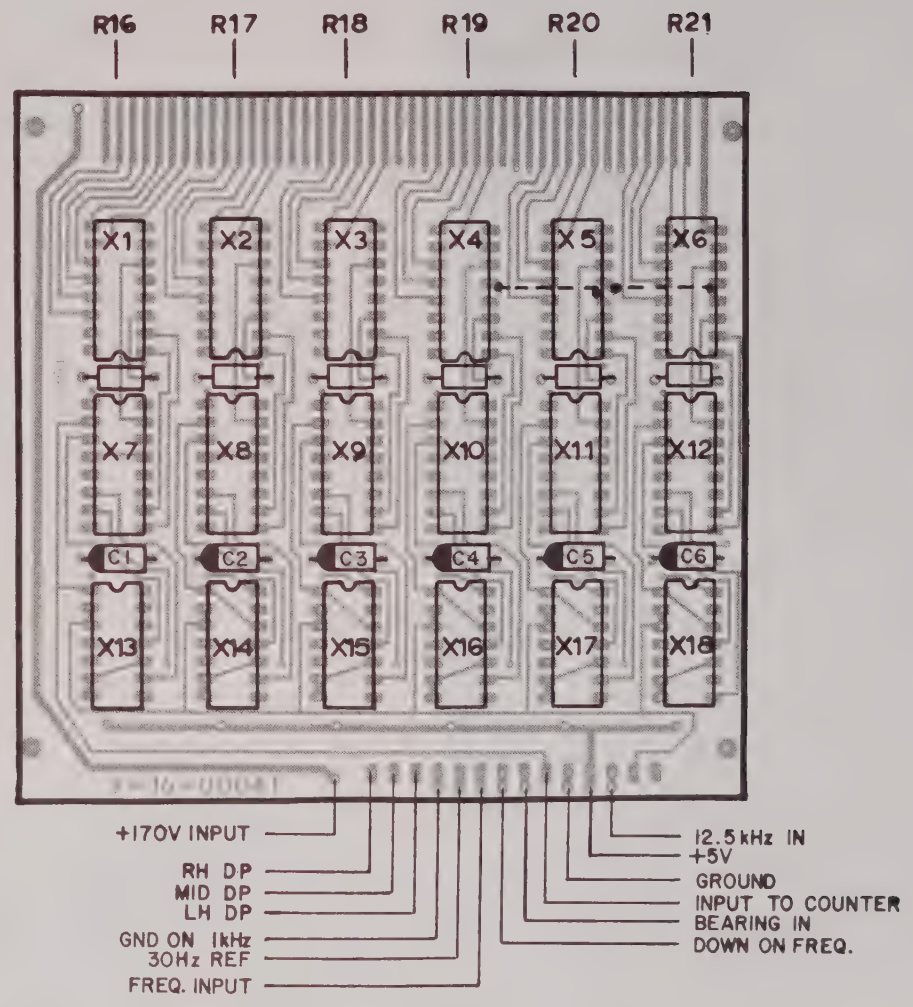

DIGITAL READOUT BOARD PARTS LAYOUT

Fig. 8-30 DIGITAL READOUT AND DISPLAY ASSEMBLY NAV-750/A/B

DIGITAL READOUT ASSEMBLY THEORY OF OPERATION

(NAV-750/A/B)

1.1 Introduction.

1.2 The Digital Readout Assembly provides a digital display of either the frequency or the bearing selected on the NAV-750 series test set. RF frequencies are inputted onto the Digital Gating Board from the 12.5 kHz Phase Lock Loop Board, via a divide-by-10 prescaler mounted on the inside back panel of the Digital Counter Enclosure. Bearing signals are received directly onto the Digital Gating Board from PC-4. Mode selection is accomplished by use of the BEARING-FREQ. DISPLAY SWITCH and the kHz - 0.1 kHz FREQUENCY RESOLUTION SWITCH.

2-1. Prescaler Operation 1-16-0221

2-2. RF from the 12.5 kHz Phase Lock Board is buffered and amplified by Q1701 & Q1702 (2N5179). Q1701 & Q1702 provide an ECL compatible RF signal to X1701 (MC12013). X1701 is a high speed divide-by- 10 or 11 prescaler. Pins 9-13 are tied to the +5 supply so that the prescaler operates in the divide-by-10 mode only. Because the voltage swing of an ECL logic level transistion is small, about 0.85V typ.; the clock input line X1701 pin 15 is tied to the biasing reference voltage X1701 pin 14. Typical logic levels for ECL are, -1.75V for low logic levels and -0.9V for high logic levels. L1701 is used to block RF energy from X1701 pin 14. CR1701 & CR1702 (HP2800) are clipping diodes which limit the amplitude of the input signal swing to ± a diode gap of the reference voltage V_{bb} on X1701 pin 14. The prescaled output of X1701 pin 7 is outputted to the Digital Gating Board.

3-1. Frequency Measurement 3-16-0178

3-2. The 12.5 kHz clock from the Phase Lock Board is used to derive the gating signals used in the Digital Display Assembly. The 12.5 kHz clock is inputted on P14 pin 7 and is applied to the base of Q1403. Q1403 & Q1404 (2N3646) buffer and sharpen the 12.5 kHz waveform before it is applied to the gating counter string X1423-X1426 (7490). The 12.5 kHz clock is divided by 250, by X1423 - X1425 to provide a 50 Hz clock output on X1425 pin 11. The 50 Hz output of X1425 is further divided by X1426 to provide a 5 Hz clock rate on X1426 pin 11. NAND gate X1427 (7400) selects between the 50 Hz or 5 Hz (0.02 or 0.2 second time base) outputs of X1425 or X1426.

3-3. Time base selection is governed by the kHz - 0.1 kHz FREQUENCY RESOLUTION SWITCH, S18. When S18 is set to the 0.1 kHz position, X1427D pin 12 and X1427A pins 1 & 2, are grounded. At this time, the output of X1425 pin 11 is not gated through X1427D. With X1417D pin 12 and X1417A pins 1 & 2 grounded, X1427D pin 11 and X1427A pin 3 are high. With X1427A pin 3 and X1427D pin 11 high, the output of X1426 pin 11 is gated by X1427B & X1427C. The output of X1427C is applied to X1428B pin 5 (7400).

3-4. In the frequency mode of operation, X1419C pins 9 & 10 (7400) are grounded. X1419C pin 8 is high and X1428A pin 2 is grounded. With X1428A pin 2 grounded, the 30 Hz REF signal is not gated through X1428A (7400). This causes X1428A pin 3 to be high. At this time, the 5 Hz clock from X1426 pin 11 is gated through X1428B & X1428D (7400) and applied to the clock input of JK flip-flop X1422A (74S112).

3-5. The symmetrical, square-wave Q output of X1422A is applied to X1421B pin 5 and to the base of Q1405 (2N3646) through a capacitor. The negative going transition of the Q output of X1422A applies a ground to the base of Q1405 until C1405 charges. The base is then returned to 5V. This turns ON Q1405. The output pulse of Q1405 is used to enable the 4 bit latches X1407-X1412 (7475).

3-6. The output of Q105 is also applied to the base of Q1406 (2N3646) through a capacitor. The negative going transition of the Q1405 output pulse triggers pulse generator Q1406 by applying a temporary ground to the base of Q1406 until C1409 charges. The output of Q1406 applies a brief high level on the reset lines of counters X1413-X1418. This resets the counters to zero for the start of a new measurement period. C1410 rounds off the leading edge of the reset pulse and insures that there is no overlap between the latch and reset pulses. This guarantees that the latches X1407-X1412 will not be loading data when the counters are reset.

3-7. In the frequency mode of operation, X1419B pin 5 (7400) and X1419C pins 9 & 10 are grounded. With X1419B pin 5 grounded, bearing information is not gated through X1419B. At this time, X1419B pin 6 is high. Since X1419C pins 9 & 10 are grounded, X1419C pin 8 is high. Because X1419C pin 8 & X1419B pin 6 are high, the prescaled frequency input from J141 is gated through X1419D, X1420A, X1420D, X1420B, X1420C, X1421D, X1421A (74S00) to X1421B pin 4.

3-8. The Q square-wave output of X1422A is applied to X1421B pin 5. During the time X1422A Q is high, X1421B passes the prescaled frequency pulses to the clock input of X1422B (74S112). When the output of X1422A is low, the pulses are not gated through X1421B. X1422B is used as a 30 MHz divide-by-2 prescaler for counters X1413-X1418. X1422B is used in place of the divide-by-2 section of X1413. X1422B is allowed to toggle only when the load line of X1413-X1418 is low.

3- 9. When the input frequency, from the RF Oscillator reaches counters X1413-X1418, it has been divided by 20 by prescaler X1701 and a divide-by-2 prescaler on the 12.5 kHz Phase Lock Board. Time bases of 0.2 and 0.02 sec. effectively multiply the count to obtain a true frequency readout.

3-10. The input frequency is preconditioned by X1419D and X1420A. The output of X1420A is applied to one input of X1421D directly and to the other input of X1421D through three inverters. The output of X1421D is a series of negative going pulses of the same frequency as the input. The pulse width of the pulses from X1421D is equivalent to the propagation delays of the three gates X1420D, X1420B & X1420C. The use of very narrow pulses improves the last digit accuracy of the counter.

3-11. The frequency operation of the counter, when the kHz - 0.1 kHz FREQUENCY RESOLUTION SWITCH is in the kHz position, is much the same as in the 0.1 kHz position. When kHz resolution is selected, X1427A pin 1 & 2 and X1427D pin 12 float high. The 5 Hz clock from X1426 is blocked and the 50 Hz clock is gated through X1427B, etc. to provide the gating reference for the system. At this time Q1410 (2N2896) is biased ON to provide a ground for proper decimal place positioning. In the 0.1 kHz mode, Q1409 (2N2896) is biased ON by the high state of X1427A pin 3 to provide for proper decimal point positioning for that resolution.

4-1. Bearing Measurement.

4-2. In the bearing measurement mode, the BEARING-FREQ. DISPLAY SWITCH is in the BEARING position. In this mode; X1419B pin 5, X1419C pins 9 & 10, X1428A pin 2, and the base of Q1411 (2896) are pulled towards +5V by R1434. With X1419C pins 9 & 10 high, X1419C pin 8 is low and prescaled frequency information is not gated through X1420B.

4-3. The 30 Hz REF Signal, from PC-4, is used as the system clock in the bearing display mode. The 30 Hz REF Signals are buffered and sharpened by Q1407 & Q1408. Since X1428A pin 2 is high, the 30 Hz REF signal is gated through X142B and is applied to X1428 pin 13. At this time, X1419C pins 9 & 10 are up and X1419C pin 8 is down. With X1419C pin 8 down, gating clock signals from X1425 or X1426 are blocked and X1428 pin 6 is high. The 30 Hz REF clock is gated through X1428D and is applied to the clock input of X1422A. Operation of X1422A, Q1405 & Q1406 is the same as in the frequency measurement mode.

4-4. The 30 Hz BEARING INPUT is inputted on P14 pin 2 and is buffered and sharpened by Q1401 & Q1402 (2N3646). With X1419B pin 5 and X1419C pins, 9 & 10 high, the bearing signal is inverted by X1419A and gated through X1419B, X1421A, & X1421B. This signal is applied to the clock input of X1422B. Operation of X1422B is the same as in the frequency mode.

5-1. Counter Operation.

5-2. Frequency or bearing pulses are down-counted by X1422B, X1413-X1418, after the receipt of a reset pulse on X1422B pin 14 and X1413-X1418 pins 2 & 3. X1422B, X1413-X1418 present BCD frequency or bearing information to the inputs of four bit latches X1407-X1412. This information is stored on the latches when an enable pulse is received on X1407-X1412 pins 4 & 13. The information is presented to the high voltage display decoder-drivers, X1401-1406 (DD700 or DM8880). The decoder-drivers provide the logic & switching to drive the Beckman 7-segment displays. Decimal point information is applied by the appropriate logic on the Digital Gating PC Board, via Q1409-Q1411.

DATE	REV	CHANGE	APP'D
12-9-75		ADDED NOTE 5. SNV	

READOUT 6 | READOUT 5 | READOUT 4 | READOUT 3 | READOUT 2 | READOUT 1

DIGITAL DISPLAY BOARD 3-16-0003

DIGITAL READOUT BOARD 3-16-0004

DIGITAL GATING BOARD 3-16-0131

P14-6 SHIELD GND

P14-2 BRG. IN

P14-7 12.5 KHZ CLOCK IN

P14-1 30HZ REF

J141 FREQ. IN

P14-8 +180 V

P14-5 +5 VDC

P14-4 PWR GND

+5 V SUPPLY

PRESCALER ÷10

DOWN ON FREQ.

BRG. | FREQ. | KHz. | 0.1 KHz

S17 S18

SIDE VIEW SPERRY DISPLAY SP352

AS VIEWED FROM FRONT (CHARACTERS REMOVED)

NOTES

1. ALL UPWARD POINTING ARROWS GO TO +5V

2.

DEVICE	PWR (GND)	PINS VCC
DD-700	8	16
7400	7	14
7490	7	14
7475	12	5
7490	10	5
74S112	8	16

3. THE DIVIDER CKT. BD, SCHEM 1-16-0221, IS LOCATED ON INSIDE OF BACK PANEL OF COUNTER IN SETS S/N 170, S/N 181 & UP. ON ALL OTHER SETS, IT WILL BE FOUND AS PART OF 12.5KHz Ø LOCK BOARD.

NEXT ASS'Y	QT'Y	MODEL	ITEM	REQ'D	PART NO.	DESCRIPTION
		NAV 750				SCHEMATIC

APPLICATION — LIST OF MATERIALS

TOLERANCES (UNLESS OTHERWISE SPECIFIED, ALL DIMENSIONS APPLY AFTER FINISH): DECIMALS: ± .008; ANGLES: ± 1/2°; FRACTIONS: ± 1/64; SURFACE ROUGHNESS 125 ✓; REMOVE ALL BURRS

MATERIAL — TREATMENT — FINISH

DRAWN WP 3/24/73 — CHECKED KR 8/30/73 — APPROVED [illegible] 10/19/73

INSTRUMENT FLIGHT RESEARCH CORPORATION, WICHITA, KANSAS

TITLE: DIGITAL READOUT SCHEMATIC NAV-750

SIZE — PART NUMBER 3-16-0178 — REV

SCALE — WEIGHT — SHEET 1 OF 4

Fig. 8-31 8-87

DATE	REV	CHANGE	APP'D
1-8-75	A	INCORP ECN # 865 SSD DLP	
4-29-77	B	INCORP ECN # 2046 TJT	

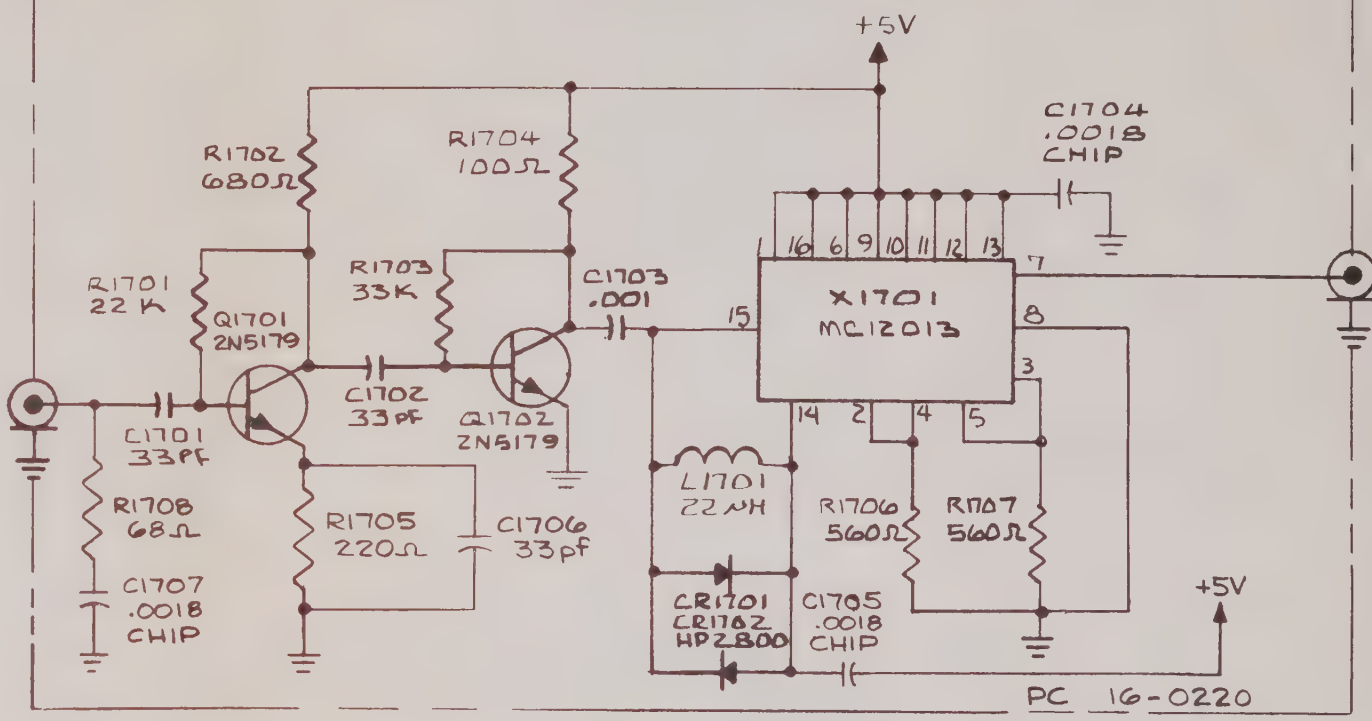

NOTE:
THIS CKT. IS LOCATED ON 12.5KHz BD. (SCHEM. 316-0206) S/N 101-169 & S/N 171-180. ALL OTHER S/N (170 & 181 & UP) WILL HAVE CKT LOCATED ON INSIDE BACK PANEL OF DIGITAL COUNTER ENCLOSURE ASS'Y.

NEXT ASS'Y	QT'Y	MODEL	ITEM	REQ'D	PART NO.	DESCRIPTION
16-0222	1	NAV-750	1	1	1-16-0221	COUNTER INPUT DIVIDER

APPLICATION | LIST OF MATERIALS

TOLERANCES
UNLESS OTHERWISE SPECIFIED
ALL DIMENSIONS APPLY AFTER FINISH
DECIMALS: .xx = ± .010 .xxx = ± .005
ANGLES: ± 1/2°
FRACTIONS: ± 1/64
SURFACE ROUGHNESS 125 ✓
REMOVE ALL BURRS

DRAWN DATE 1/28/75
CHECKED DATE RR 1/28/75
APPROVED DATE 1-29-75

INSTRUMENT FLIGHT RESEARCH CORPORATION
WICHITA, KANSAS.

TITLE: COUNTER INPUT DIVIDER

MATERIAL NOTED
TREATMENT —
FINISH —

SIZE A | PART NUMBER 1-16-0221 | REV B
SCALE — | WEIGHT — | SHEET 1 OF 1

NEXT ASS'Y	QT'Y	MODEL	ITEM	REQ'D	PART NO	DESCRIPTION
		NAV-750	1	1	3-16-0048	TRANS MOD AMP. PC. BD. ASS'Y
			2	1	3-16-0049A	TRANS MOD. AMP. P.C. BD.
			3	1	2-16-0076	MOUNTING BLOCK
			4	2	1-76-101	MODIFIED CONNECTOR
			5	1	205204-1	"AMP" 9 PIN CONN. (P12)
			6	2	#4-40x3/8	PHILLIPS SCREW, BND HD
			7	4	#4	INT TOOTH LOCKWASHER
			8	2	2-76-0001-21	#4-40 STANDOFF, 1" LG
			9	1	1911-4	#4 GROUND LUG
			10	2	76-0013	SHELL NUT
			11	8	#2-56x3/8	PHILLIPS SCREW, BND. HD.
			12	8	#2-56	NUT, LARGE PATTERN
			13	8	#2	INT TOOTH LOCKWASHER
			14	8"	RG-188	COAXIAL CABLE
			15	—	#22 GA	INSUL. WIRE (BLACK)
			16	—	#22 GA	INSUL WIRE (YELLOW)
			17	—	#26 GA	INSUL. WIRE

DATE	REV	CHANGE	APP'D
[illegible]	C	INCORP ECN # 1024	[illegible]
[illegible]	D	INCORP ECN # 1612	[illegible]

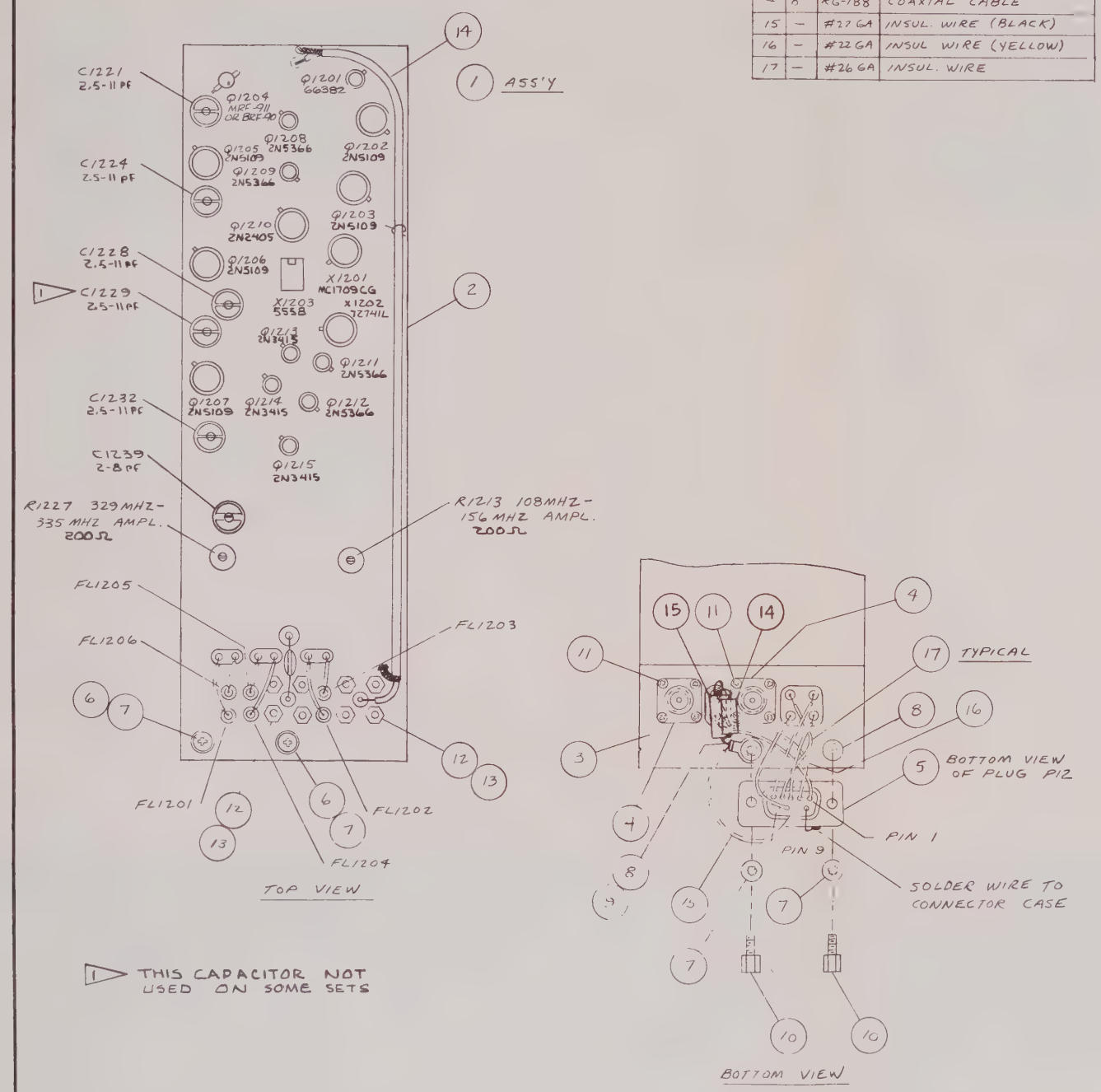

1 THIS CAPACITOR NOT USED ON SOME SETS

NAV750 EFF S/N: 101-407
NAV750A EFF S/N: 101-380

NEXT ASS'Y	QT'Y	MODEL	ITEM	REQ'D	PART NO.	DESCRIPTION
3-16-0048	1	NAV-750	1	1	3-16 0060	TRANS MOD AMP MECH ASS'Y

APPLICATION — LIST OF MATERIALS

TOLERANCES UNLESS OTHERWISE SPECIFIED ALL DIMENSIONS APPLY AFTER FINISH DECIMALS: ± .005 ANGLES: ± 1/2° FRACTIONS: ± 1/64 SURFACE ROUGHNESS 125 REMOVE ALL BURRS

DRAWN JHG DATE 6/13/73
CHECKED MHK DATE 7-3-73
APPROVED [illegible] DATE 2-18-75

INSTRUMENT FLIGHT RESEARCH CORPORATION WICHITA, KANSAS

TITLE: TRANS. MOD. AMPLIFIER MECHANICAL ASS'Y. NAV-750

MATERIAL: SEE MAT'L LIST
TREATMENT
FINISH

SIZE: C — PART NUMBER: 3-16-0060 — REV: L
SCALE: 1:1 — WEIGHT
SHEET 2 OF 2

Fig. 8-33 8-89/8-90 blank

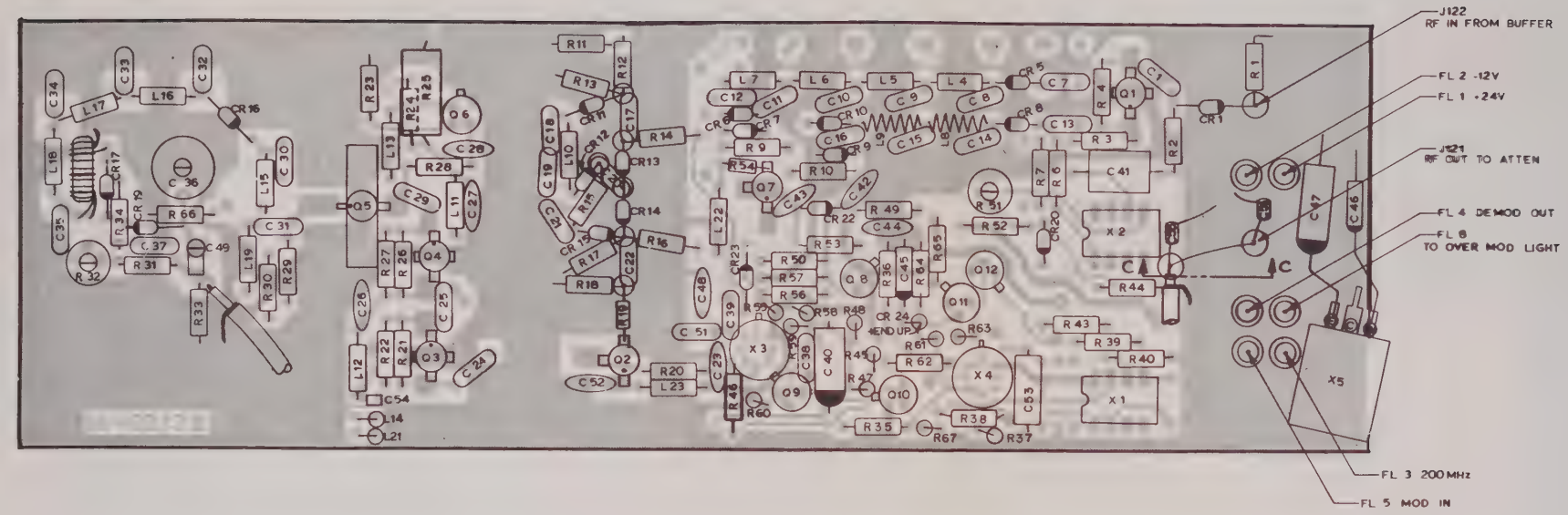

TOP VIEW

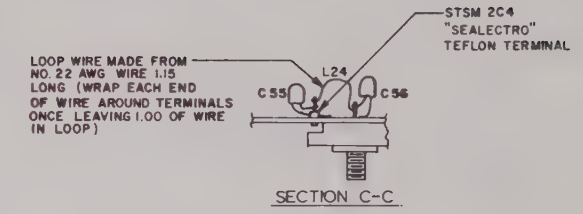

BOTTOM VIEW

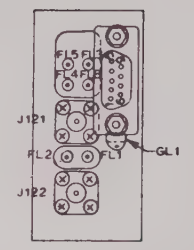

VIEW A

Fig. 8-34 MODULATOR AMPLIFIER BOARD PARTS LAYOUT NAV-750/A

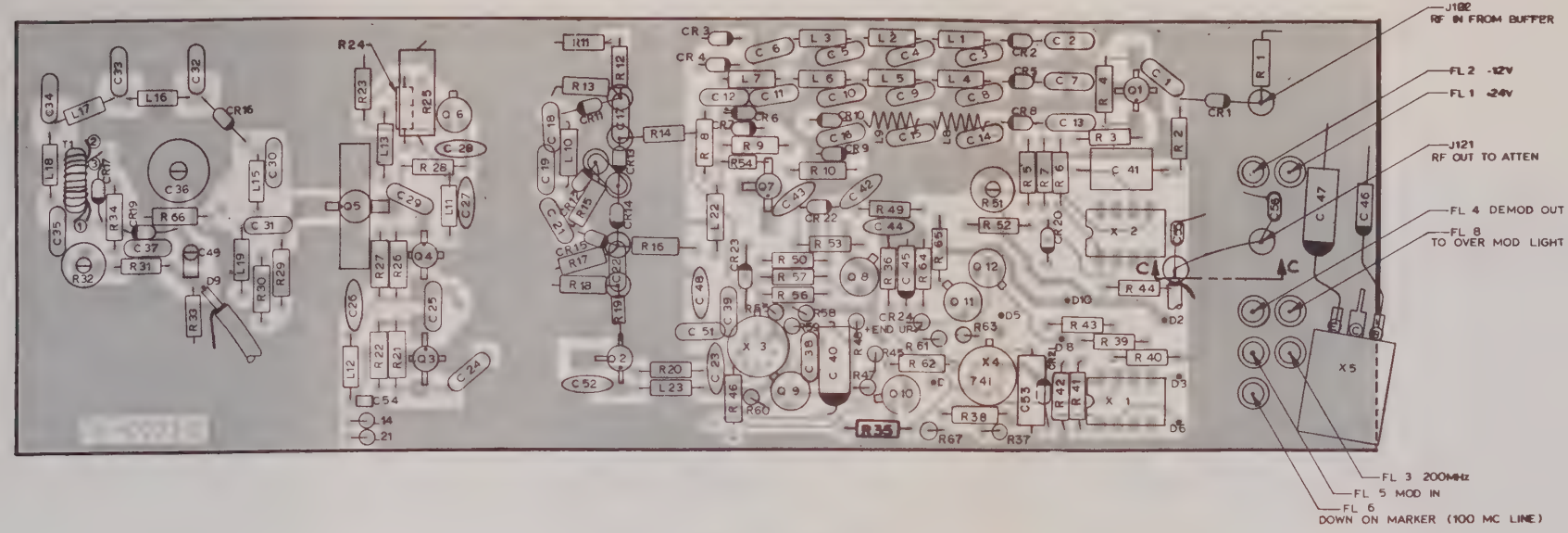

TOP VIEW

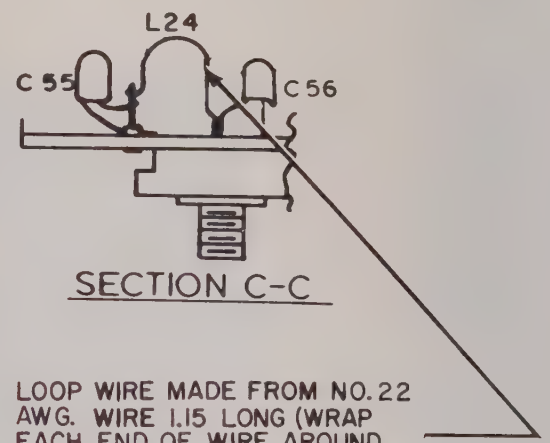

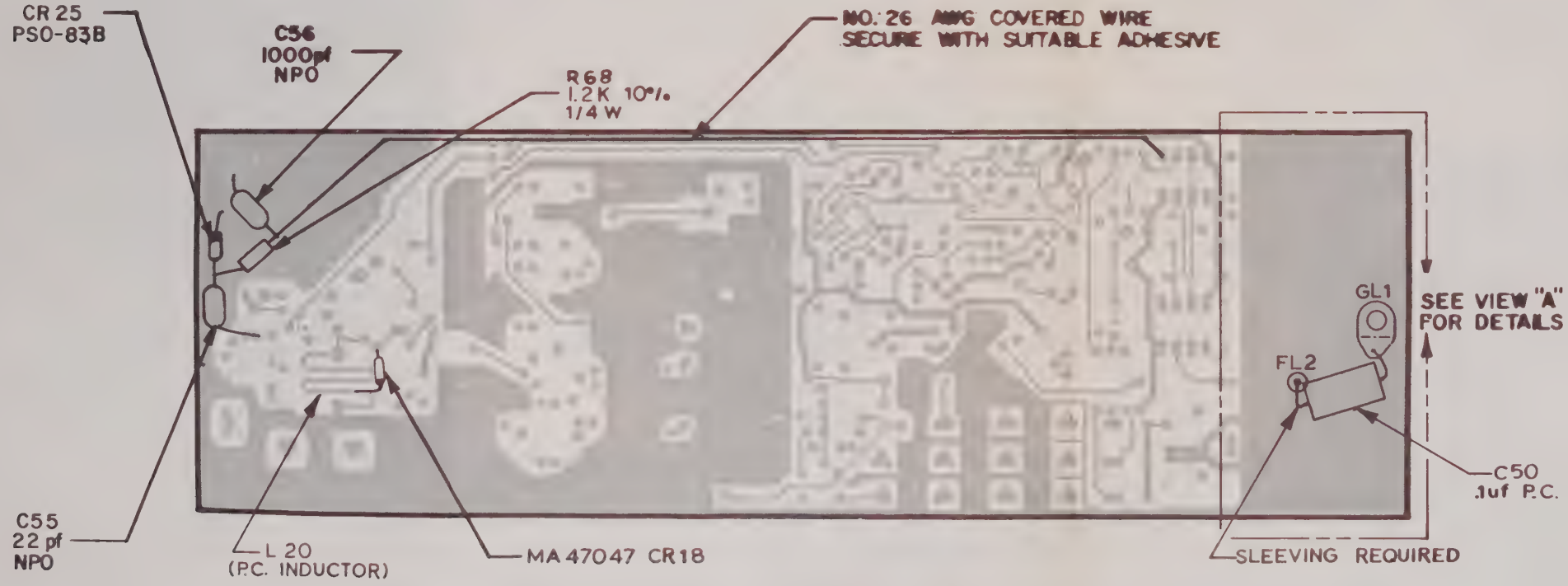

BOTTOM VIEW

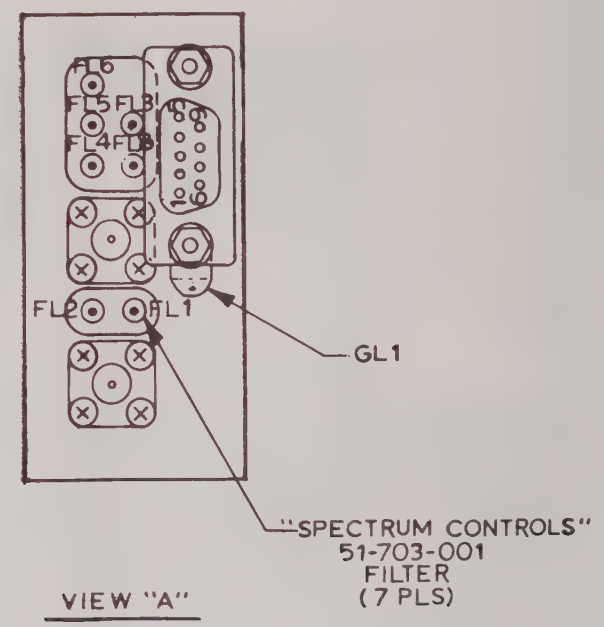

VIEW "A"

Fig. 8-35 MODULATOR AMPLIFIER BOARD PARTS LAYOUT NAV-750B

MOD AMP ASSEMBLY THEORY OF OPERATION

(NAV-750B)

4-16-0272

1-1. Introduction.

1-2. The Mod Amp receives RF energy via the Buffer Amp. It also receives selector signals from the Frequency Control Board, and a modulation input from the Tone Summation Board. These signals are used to generate the modulated RF output applied to the Attenuator, the OVER MOD signal used to control the OVER MOD LIGHT and the DEMOD OUT signal used on PC1 & PC2.

2-1. Signal Input and Low Pass Filter Operation.

2-2. Blocking diode CR1 (MA4707) controls the level of the RF inputted from the Buffer Amp. The level inputted is in direct proportion to the forward bias applied to CR1. Blocking diode CR1 is servoed by a leveler circuit consisting of X2B (5558), buffer amp Q7 (BFR 90) and associated circuitry. This circuitry monitors the outputs of the low pass filters and provides the proper biasing to CR1 for RF amplitude leveling.

2-3. The proper low pass filter is selected by the 100 MHz and 200 MHz control lines from the Frequency Control Board and Band selector logic X1A, X1B, & X2A (5558) on the Mod Amp PC Board. When the 400 MHz low pass filter is selected, the 200 MHz & 100 MHz control lines are high. The 200 MHz control line causes X1B pin 7 to go high and forward biases CR8 & CR20. This causes X2A pin 1 to be low. At this time, the RF from buffer amp Q1 (BFR 90) is allowed to pass through the 400 MHz low pass filter by CR8. The outputs of X1A & X2A are low, causing CR2 & CR5 to be reverse biased. CR2 & CR5 block the RF input to the 150 MHz and 100 MHz low pass filters.

2-4. To select the 100 MHz low pass filter, the 100 MHz and 200 MHz control lines are low. The 200 MHz control line causes X1B pin 7 to be low and reverse biases CR8. The 100 MHz control line causes the output of X1A pin 1 to be high. This forward biases CR2 and CR21. With CR21 forward biased, X2A pin 2 is brought high and X2A pin 1 is forced low. At this time the forward biasing of CR2 allows the RF from Q1 to pass through the 100 MHz low pass filter. The RF is blocked from the 160 MHz and 400 MHz low pass filters by the reverse biasing of CR5 and CR8.

2-5. The 160 MHz low pass filter is selected when the 100 MHz control line is high and the 200 MHz control line is low. With the 100 MHz line high and the 200 MHz line low, CR2 and CR8 are reverse biased and block the RF output of Q1 from passing through the 100 MHz and the 400 MHz low pass filters. At this time, CR5 allows the RF from Q1 to pass through the 160 MHz filter.

3-1. RF Modulator Operation.

3-2. The leveled RF, from the low pass filter, is applied to the RF modulator through a pi type filter. This filter consists of R11-R13. The pi filter presents a strictly resistive loading to the pin diode modulator in order to prevent frequency modulation of the RF signal.

3-3. RF modulation is accomplished by fast op amp X3 (LA3100) which varies the forward biasing of pin diodes CR13 and CR14. The Feedback Amp X3 is controlled by the MOD IN signal from the Tone Summation Board PC-3 and feedback from the RF detectors. These two signals are combined and applied to X3. X3 produces the modulation signal for the pin diodes. The amount of RF passing through CR13 and CR14 is directly proportional to the forward biasing on CR13. The -12V supply on R16 is used to supply forward biasing to CR11, CR12, and CR15 so that the pin diode modulator presents a 50 ohm termination.

4-1. RF AMP Output Filter and RF Detector Operation.

4-2. The modulated RF, from the pin diode modulator, is applied to a RF envelope amplifier consisting of Q2-Q6 and associated components. Q2 is a high-input-impedance emitter follower buffer amp. The output of Q2 (BFR 90) is applied to two common emitter class A amplifier stages with positive feedback, consisting of Q3 and Q4 (BFR 90). Q6 (2N3251A) provides a constant current source for the output buffer Q5 (HP35853E). C28 prevents low frequency RF oscillations from occuring. This circuit configuration provides good linearity and fidelity while minimizing phase shift of the modulated RF signal.

4-3. The Output Filter and RF Detector selection is controlled by the status of the 100 MHz and 200 MHz control lines. When the 200 MHz and 100 MHz control lines are high, CR16 (MA4707) is reverse biased and CR18 is forward biased. At this time, the RF output of the RF Amp is blocked from the lower frequency Output Filter by CR16. The RF output of the Amp is allowed to pass through the high frequency Output Filter and RF detector CR19 (M5324) by the forward biasing of CR18.

4-4. When the 100 MHz and 200MHz control lines are low, CR16 is forward biased and CR18 is reverse biased. The RF output from Q5 is blocked from the high frequency Output Filter by the reverse biasing of CR18. The RF from Q5 is allowed to pass through the lower frequency Output Filter by CR16.

4-5. When the 200 MHz control line is low and the 100 MHz control line is high, the outputs of X1B and X1A are both low. With the outputs of X1B low, CR18 is reverse biased and blocks the output of Q5 from the high frequency output Filter and detector. Since the output of X1A is low, CR25 (P5083B) is not forward biased and allows the line to the lower frequency Output Filter and detector to float high. This forward biases CR16. At this time, the output of Q5 is allowed to pass through the lower frequency Output Filter. The detected output form CR17 and CR18 (M5324) is used to provide leveling information to the Feedback Amp and is also used to drive op amp buffer X4 (741). X4 provides the DEMOD OUT output used on PC-1 and PC-2. R32 is used to balance the RF output level of the two output filters.

5-1. Over Mod Operation.

5-2. The Over Mod circuit is used to detect levels of signals from the Feedback Amp which will cause the RF carrier to be overmodulated. The Over Mod circuit causes the OVER MOD LIGHT to illuminate, alerting the operator of this condition.

5-3. When the modulation voltage from X3 pin 6 is sufficiently high, zener diode CR23 (1N5231B) becomes forward biased and causes Q8 (2N3251A) to turn OFF. With Q8 OFF, Q11 (2N3251A) and Q12 (2N2222) are turned ON and the Over Mod Light Line is pulled high. This causes the OVER MOD LIGHT to illuminate.

5-4. When the modulation voltage drops below about -4V the base of Q9 (2N2222) is biased OFF and allows the base of Q10 (2N2222) to be pulled towards +12V by R60. This turns ON Q10. With Q10 ON, Q11 & Q12 are biased to turn ON and the OVER MOD LIGHT illuminates.

DATE	REV	CHANGE	APP'D
4/12	A	INC ECN # 1 JNV	
12-19-72	B	INC. ECN. # 2 LD	
10-24-73	C	INC. ECN # 1022a BS	
8-12-74	D	INCORP ECN # 1612 JNV	

MOD. IN

P12-5

FL1206

APPROX
1 10 - 15 V ON 108 - 156 MHz.

J122
OSC. INPUT

R1201 68Ω
C1201 33PF
C1202 33PF
Q1201 6638Z
R1205 820Ω
C1203 .001
R1207 330Ω
R1208 3.3K
R1210 120Ω
R1209 33K
C1204 33PF
R1206 10K
C1205 33PF
L1201 2.2MH
C1207 .001
Q1203 2N5109
R1209 100Ω
C1206 47PF
R1211 22Ω
L1202 .22MH
L1231 .33MH
Q1202 2N5109
L1203 .33MH
L1204 .47MH
L1205 .47MH
L1206 .33MH
C1208 5PF 5M
C1209 5PF 5M
C1210 5PF 5M
R1212 609Ω
R1213 200Ω RF LEVEL
CR1201 HP2800
C1212 47PF
L1207 .1MH
C1211 18PF 5M
L1208 .33MH
L1209 .22MH
C1213 18PF 5M
L1210 .1MH
L1211 2.2MH

108-156MHZ AMP

CARRIER LEVEL 5 VDC
3
R1214 470K
-12V

4

+24V
X1202 72741L
C1236 1MF
0 V = 0% MOD
4 V = 100% MOD
5 8 V = 200% MOD
R1215 40.2K
R1216 80.6K
R1217 63.4K
R1218 1K
-12V
FL1205
P12-4
DEMOD.

J121
RF OUTPUT
1 MW CAL. @
132 & 332 MHz.
C1218 .001
L1212 2.2MH
R1234 2.2K
C1219 .001

+24V
R1232 680Ω
C1214 .0018 CHIP
R1228 40.2K
R1229 7.15K
R1230 806K
X1201 MC1596G
C1216 .022
R1233 470Ω
C1217 100PF
Q1210 2N2905
R1231 10K
C1235 15MF 20V
C1215 .0018 CHIP
-12V

2 +12.1 V ON GS

R1202 33K
R1203 1.2K
Q1204 MPF-911 OR BF-90
C1220 33PF
C1221 2.5-11PF
L1213
R1219 33K
L1214
C1222 33PF
Q1205 2N5109
C1225 .001
R1220 330Ω
C1223 33PF
L1215
C1224 2.5-11PF
R1221 220Ω
L1218 .15MH
C1228 2.5-11PF
R1222 22K
C1226 33PF
L1216
C1227 .01
L1217 .1MH
Q1206 2N5109
L1219
L1220 .1MH
R1223 680Ω
C1230 .01
R1224 120Ω
C1238 33PF
L1232 .22MH
C1239 2.5-11PF
R1225 10K
L1221 .15MH
C1231 .001
L1222
Q1207 2N5109
L1223 .22MH
C1232 2.5-11PF
L1224 .33MH
L1225 .22MH
CR1205 HP2800
R1226 604Ω
R1227 200Ω RF LEVEL
CAPACITANCE OF P.C. BOARD PATHS
CR1202 FSC838
CR1204 FSC838

329-335MHZ AMP

R1235 470Ω
R1236 3.3K
Q1209
R1237 470Ω
R1238 3.3K
Q1208
L1226 .1MH
L1227 .12MH
C1233 5PF
L1228 .1MH
L1229 .12MH
L1230 2.2MH
CR1206 1N4148
CR1207 1N4148

P12-3
200 MHZ LINE P13-3
FL1201
+24V
R1251 100K
R1250 10K
X1203A 5558
X1203B 5558
DOWN ON GS

CR 1203 IN5234 6.2 V

P12-1
+24V
FL1202
P12-2
-12V
FL1203
C1240 .01MF P.C.
C1241 .1MF PC
-12V
C1237 1MF
P12-7
SYSTEM GND

+24V +24V +24V +24V +24V
R1249 27K
R1239 27K
Q1211
CR1208 1N4148
R1242 22K
R1244 3.3K
Q1212
C1239 1MF
R1247 4.7K
R1246 100K
R1248 1K
Q1215
R1240 27K
Q1213
R1243 56K
R1245 22K
Q1214
R1241 10K

FL1209
P12-8
OVER MOD. LIGHT
L15

3-16-0049 PC. BD.

+12 V TO BUFFER AMP.
P12-9
+12 V

NOTES:
1. ALL PNP TRANSISTORS ARE TYPE 2N5366 UNLESS OTHERWISE SPECIFIED.
2. ALL NPN TRANSISTORS ARE TYPE 2N3415 UNLESS OTHERWISE SPECIFIED.
3. ALL RESISTORS MARKED WITH AN ASTERISK ARE 1% TOL.
4. ALL TANT. CAPACITORS TO BE 35V UNLESS OTHERWISE SPECIFIED.

NAV750 EFF S/N: 101-407
NAV750A EFF S/N: 101-380

16-0049B	1	NAV-750	1	1	16-0060	SCHEMATIC
NEXT ASS'Y	QT'Y	MODEL	ITEM	REQ'D	PART NO.	DESCRIPTION

APPLICATION — LIST OF MATERIALS

TOLERANCES UNLESS OTHERWISE SPECIFIED
ALL DIMENSIONS APPLY AFTER FINISH
DECIMALS: ± .005
ANGLES: ± 1/2°
FRACTIONS: ± 1/64
SURFACE ROUGHNESS 128
REMOVE ALL BURRS

DRAWN 6/11/73 JNV
CHECKED
APPROVED 11/17/74

INSTRUMENT FLIGHT RESEARCH CORPORATION
WICHITA, KANSAS

TITLE: MODULATOR AMPLIFIER SCHEMATIC NAV-750

MATERIAL —
TREATMENT —
FINISH —

SIZE C | PART NUMBER 3-16-0060 | REV D
SCALE | WEIGHT | SHEET 1 OF 2

DATE	REV	CHANGE	APP'D
3 30 77	A	INC ECN NO 1963 RKK	
4-20-77	B	INC ECN NO 2021 TJT	
10-27-78	C	INC ECN 2500 JAS	
1-9-79	D	INC ECN 2586 JAS	
4-27-79	E	INC ECN 2821 JAS	

RF AMP

OUTPUT FILTER & DETECTORS

MODULATOR

160MHz LOW PASS

400MHz LOW PASS

J122 RF IN FROM BUFFER

J121 RF OUT TO ATTEN.

MOD IN

200 MHz LINE

BAND SELECT

FEEDBACK AMP

LEVELER

DEMOD OUT

TO OVER MOD LIGHT

OVER MOD CKT.

2-16-0273 PC BD

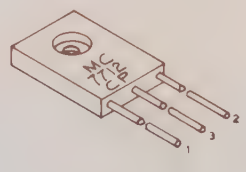

NOTE:

1.

LAST USED NO.	NOS. NOT USED
X 5	
Q 12	
CR 24	CR 2,3,4, 21
R 67	R 5, 8, 41, 42
C 66	C 2,3,4,5,6
L 23	L 1,2,3
T 1	

2. ALL UNMARKED CAPACITOR VALUES ARE IN μf.

*3. ALL RES. ARE 1/4 W 10% UNLESS MARKED * WHICH ARE 1/4W 1% WITH EXCEPTION OF R19 & 54 WHICH ARE 1/8 W 10%.

4. "JOHANSON"/EQUIV. VARIABLE CAPACITOR (7273)

8. "ERIE"/EQUIV. VARIABLE CAPACITOR (DV11P8A)

NAV750 EFF: 408 & ON

NAV750A EFF: 381 & ON

ITEM	REQ'D	PART NO	DESCRIPTION
			LIST OF MATERIALS

TOLERANCES	DRAWN rkk 92976
MATERIAL	CHECKED
FINISH	APPROVED
NEXT ASSY	- IFR INC - WICHITA, KANSAS
APPLICATION	TITLE MOD AMP SCHEMATIC NAV 750A
USED ON	SIZE D PART NUMBER 4-16-0337 REV E
	SCALE WEIGHT SHEET 1 OF 1

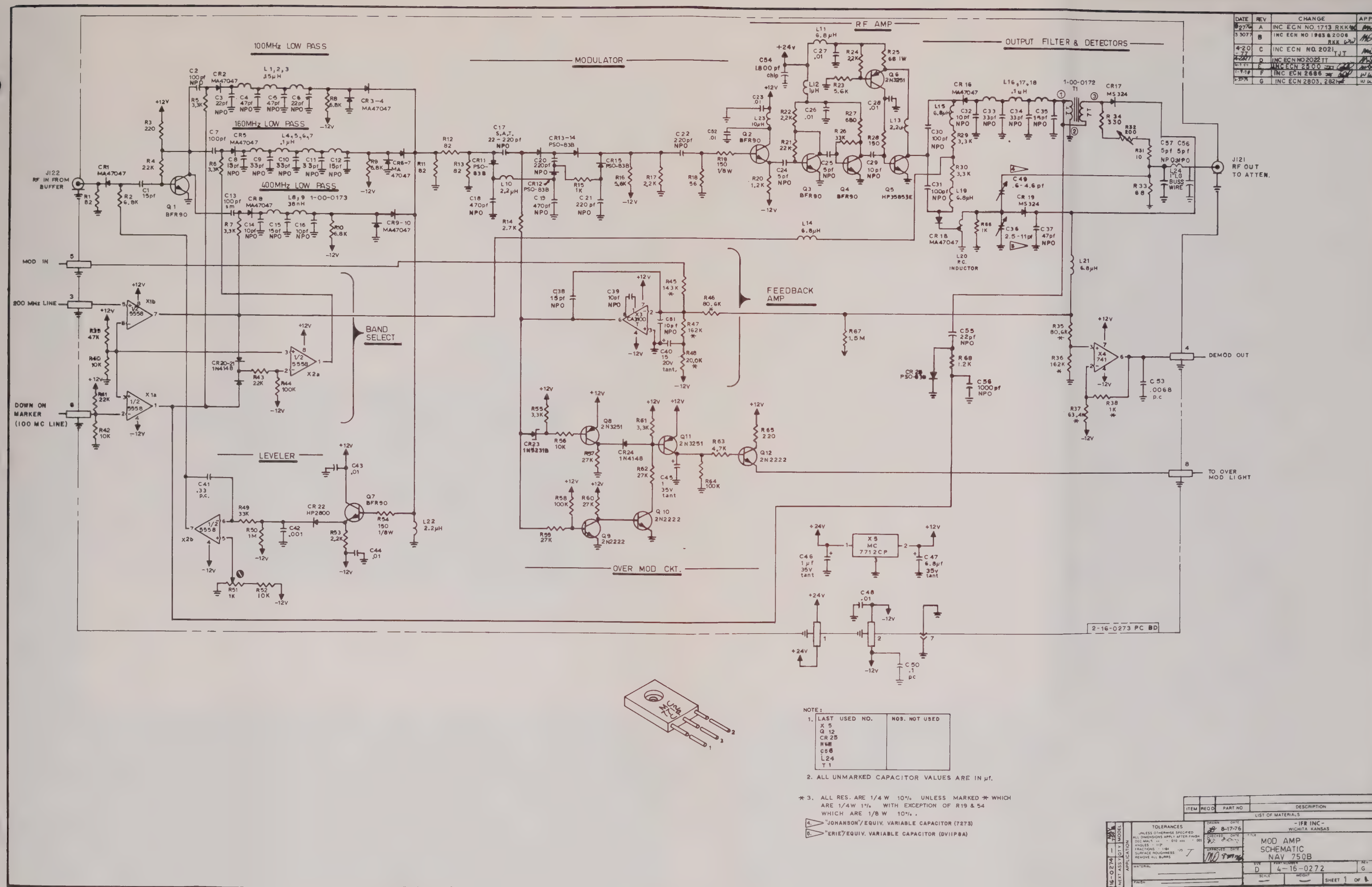

100MHz LOW PASS
160MHz LOW PASS
400MHz LOW PASS
MODULATOR
RF AMP
OUTPUT FILTER & DETECTORS
FEEDBACK AMP
BAND SELECT
LEVELER
OVER MOD CKT.
J122 RF IN FROM BUFFER
J121 RF OUT TO ATTEN.
MOD IN
200 MHz LINE
DOWN ON MARKER (100 MC LINE)
DEMOD OUT
TO OVER MOD LIGHT
2-16-0273 PC BD
NOTE:
1. LAST USED NO. | NOS. NOT USED
X 5
Q 12
CR 25
C56
L24
T 1
2. ALL UNMARKED CAPACITOR VALUES ARE IN µf.
* 3. ALL RES. ARE 1/4 W 10% UNLESS MARKED * WHICH ARE 1/4W 1% WITH EXCEPTION OF R19 & 54 WHICH ARE 1/8 W 10%.
4. "JOHANSON"/EQUIV. VARIABLE CAPACITOR (7273)
5. "ERIE"/EQUIV. VARIABLE CAPACITOR (DV11P8A)
DATE | REV | CHANGE | APP'D
A | INC ECN NO. 1713 RKK
B | INC ECN NO 1963 & 2006 RKK
C | INC ECN NO. 2021 TJT
D | INC ECN NO 2022 TT
E | INC ECN 2500
F | INC ECN 2686
G | INC ECN 2803, 282
ITEM | REQ'D | PART NO | DESCRIPTION
LIST OF MATERIALS
TOLERANCES
-IFR INC-
WICHITA KANSAS
MOD AMP
SCHEMATIC
NAV 750B
D
4-16-0272
G
SHEET 1 OF 1

Fig. 8-38

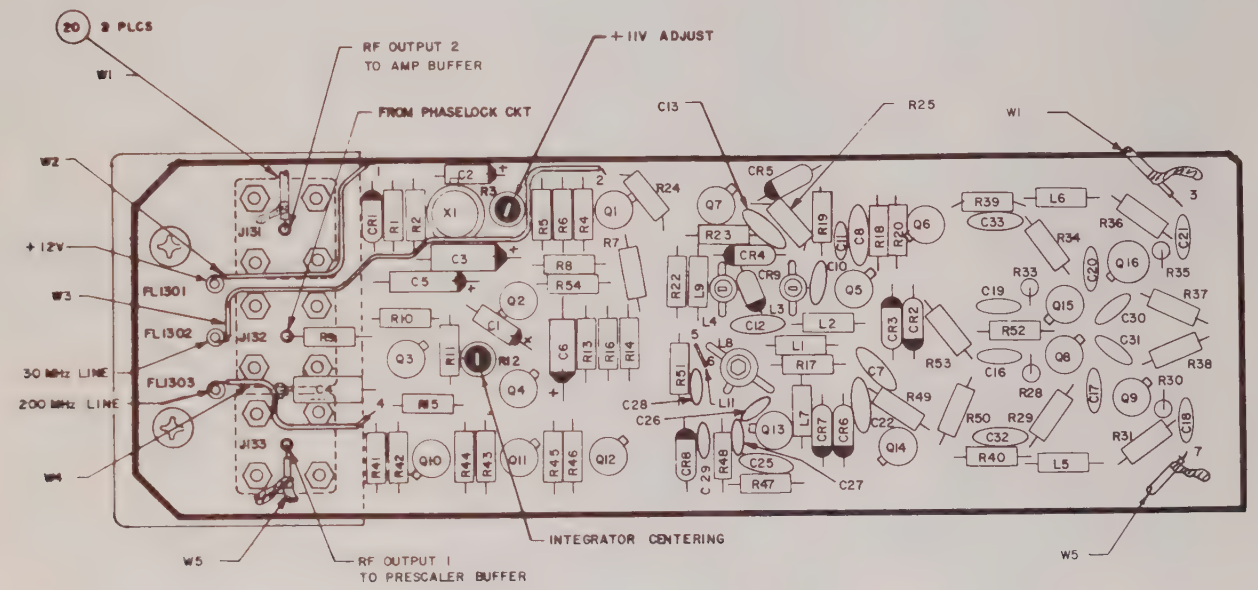

Fig. 8-39 OSCILLATOR BOARD PARTS LAYOUT NAV-750

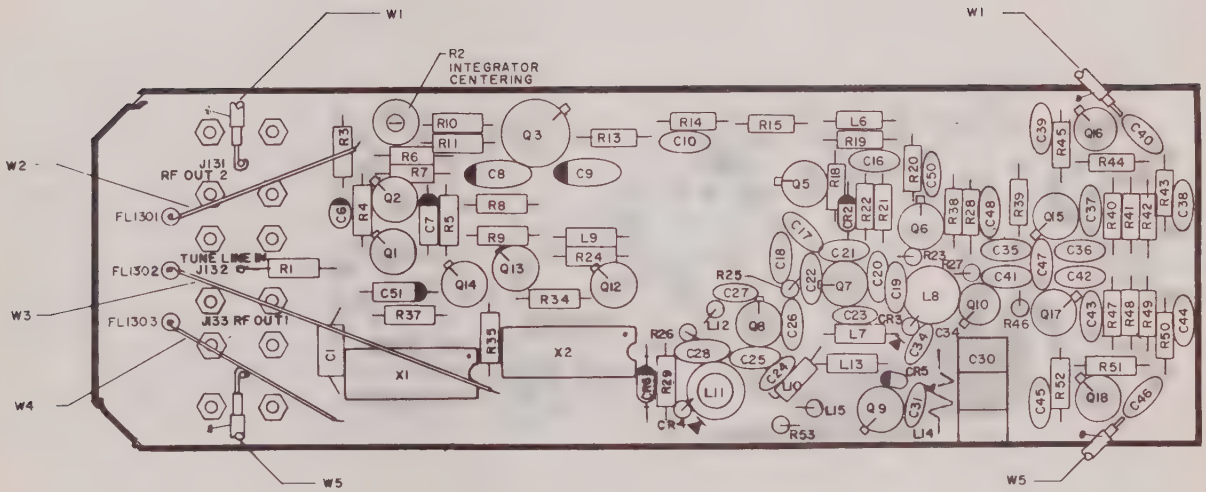

Fig. 8-40 OSCILLATOR BOARD PARTS LAYOUT NAV-750A

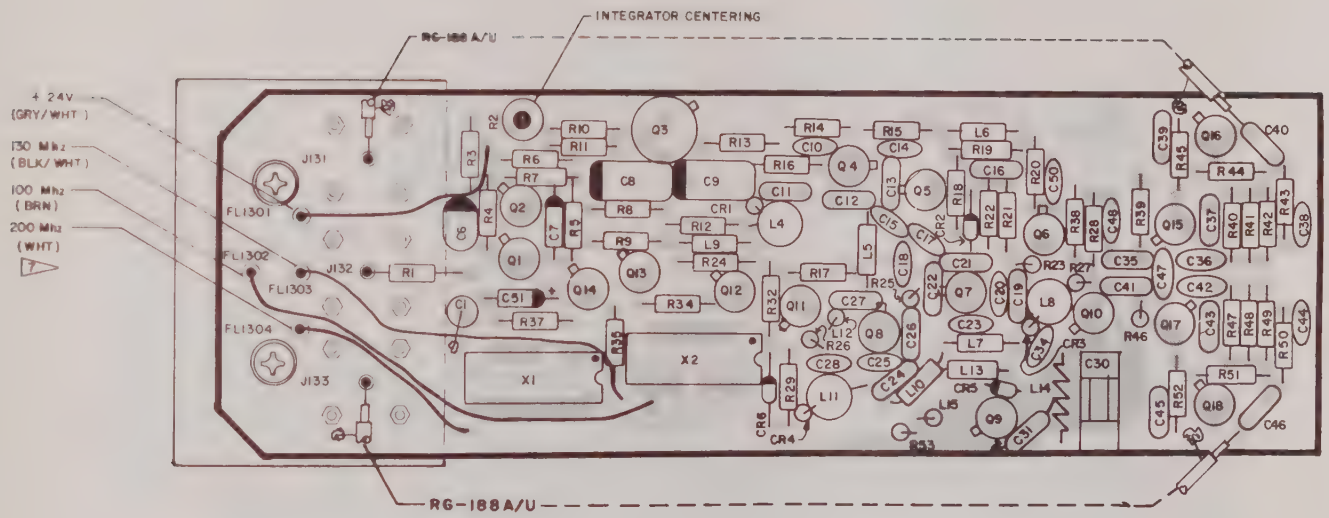

Fig. 8-41 OSCILLATOR BOARD PARTS LAYOUT NAV-750B

RF OSCILLATOR THEORY OF OPERATION

(NAV-750)

3-16-0022

1-1. Introduction.

1-2. The RF Oscillator Assembly contains two RF oscillator circuits, a 11V regulator, a 5.6V regulator, band switching circuitry for the RF oscillators, an interface for the frequency control signal and output buffers for the RF oscillators. The RF Oscillator Assembly accepts frequency band switching commands from the Frequency Control Board and a frequency control voltage from the 12.5 kHz Phase Lock Assembly. It presents RF outputs to the Prescaler Buffer for the 12.5 kHz Phase Lock Assembly and to the Mod. Amp. Buffer.

2-1. +11V & +5.6V Regulator Operation.

2-2. The +12V supply voltage is filtered by L1310, C1334 and FL1301 and applied to a +11V voltage regulator consisting of X1301 (μA741C), Q1301 (2N3251A), CR1301 (1N823) and associated components. The op amp voltage comparitor X1301 compares the output voltage at the collector of Q1301, as seen through voltage divider network R1302, R1303, & R1304; to the 6.2V developed by zener diode CR1301. If a difference in voltage exists on X1301 between pins 2 & 3, an error voltage is generated on X1301 pin 6. This voltage changes the bias on the base of Q1301, thus regulating the 11V output. The 11V regulated output may be manually adjusted by R1301 to the desired output voltage.

2-3. The 5.6V supply is regulated by Q1302 (2N2222). The bias on the base of Q1302 is derived, via a voltage divider, from the +11V regulated output. Therefore, the +5.6V output voltage will track the voltage present on the +11V regulated output line.

3-1. RF Oscillator Operation.

3-2. The two RF oscillators operate in different bands of RF frequencies. One oscillator generates frequencies from 108 to 156 MHz and the other generates frequencies from 329 to 335 MHz. Power is applied to only one oscillator at a time as determined by the status of the 200 MHz line. Transistors Q1310 (2N2222), Q1311 & Q1312 (2N3251A) are used to switch power to the oscillator selected

3-3. When the 200 MHz line is low, Q1310 is biased to turn OFF. With Q1310 OFF, the base of Q1311 is pulled toward 5.6V by R1343. This turns Q1311 OFF. When Q1311 is OFF the base of Q1312 is biased to a low voltage level. At this time, Q1312 is turned ON and applies the +5V to operate the 108-156 MHz oscillator.

3-4. When the 200 MHz line is high, indicating that a Glide Slope frequency is required, Q1310 is biased ON. With Q1310 ON, the base of Q1311 is biased to a low level and Q1311 is ON. This applies +5V to operate the 329-335 MHz oscillator and biases the base of Q1312 to a high enough voltage to turn Q1312 OFF. At this time, 5V is not applied to power the 108-156 MHz oscillator.

3-5. The 108-156 MHz oscillator coveres the 108-156 MHz band in two ranges. Range selection is accomplished by the 30 MHz line from the Frequency Control Board PC-6. When the 30 MHz line is low, Q1307 (2N3251A) is biased to turn OFF and +11V is present at L1304. With 11V at L1304, CR1309 (PSO83B) is forward biased, producing an effective short across L1304. This leaves only L1303 in the tuned circuit. This is done to reduce the maximum voltage needed on the tuning varactor to cover the 108-130 MHz range.

3-6. When a frequency above 130 MHz is selected, the 30 MHz line is high. Q1307 is biased ON and provides a ground to L1309. This causes CR1309 to be reverse biased and causes CR1304 (PSO83B) to be forward biased. With CR1304 forward biased, L1303 & L1304 are paralled. The parallel connection of L1303 & L1304 increases the frequency to which the oscillator may be tuned and allows the oscillator to operate in the 130-156 MHz range.

3-7. Q1305, Q1313 (66382) and associated circuitry comprise two Colpitts oscillators. The frequency of the oscillator selected is controlled by the voltage applied to the appropriate varactor diode, CR1305 or CR1308. The control voltage from the phase detector on the Phase-Lock Board is filtered and integrated by Q1303 (2N2222) and Q1304 (2N3251A) before being applied to the oscillator. This voltage is used to reverse bias varactor diodes CR1305 & CR1308. By reverse biasing the varactor diode the capacitance of the resonant circuit is made to change. The capacitance of the resonant circuit determines the frequency to which the oscillator is tuned.

RF OSCILLATOR THEORY OF OPERATION

(NAV-750B)

4-16-0285

1-1. Introduction.

1-2. The NAV-750B Oscillator Assembly accepts a frequency control voltage from the 12.5 kHz Phase Lock Assembly, and oscillator switching commands from the Frequency Control Board to control four FET oscillators. The FET oscillators generate RF frequencies to cover the Marker, NAV, and COMM frequency bands. The RF output is applied to the Prescaler Buffer of the 12.5 kHz Phase Lock Assembly and to the Mod.Amp Buffer.

2-1. RF Oscillator Selection.

2-2. The four FET oscillators are selected by switching logic X1 (74LS00) and X2 (74LS11) and switching transistors Q11-Q14 (2N2222). X1 & X2 are controlled by the status of the 100 MHz, 130 MHz and 200 MHz lines from the Frequency Control Board PC-6.

2-3. When the selected frequency is below the 100 MHz, the 100, 130 & 200 MHz control lines are low and the outputs of X1A and X1D (74LS00) are high. The output of X2A (74LS11) is high and only Q11 is biased ON at this time. Q11 provides a ground for the operation of the 70-79.975 MHz oscillator.

2-4. At frequencies selected above 100 MHz but below 130 MHz, the 100 MHz control line is high and the 130 and 200 MHz control lines are low. The inputs to AND gate X2B are high. The output of X2B is high at this time and only Q12 is biased ON. Q12 provides a ground for the operation of the 108-129.975 MHz oscillator.

2-5. When a frequency of 130 MHz or above is selected, the 100 MHz and 130 MHz control lines are high. The 200 MHz control line is low and the inputs to AND gate X2C are high. The output of X2C is high. At this time, only Q13 is biased ON. Q13 provides a ground for the operation of the 130-161.4 MHz oscillator.

2-6. Any time a Glide Slope frequency is selected, the 200 MHz control line is high. The output of X1D is low, switching Q11-Q13 off via the appropriate logic. At this time, the output of NAND gate X1C is high. With the output of X1C high, only Q14 is turned ON. Q14 provides the ground for the operation of the 329-335 MHz oscillator. The 5.1V supply for the oscillator switching logic is supplied by zener diode CR6 (1N5231).

RF OSCILLATOR THEORY OF OPERATION

3-1. RF Oscillator Operation.

3-2. Four FET oscillators are used to cover, the Marker, NAV, and COMM frequency bands. The 70-79.75 MHz Marker oscillator is composed of Q4 and associated components. Q7 and associated components form the 108-130 MHz VOR, Localizer, and low COMM oscillator. The 130-160 MHz high COMM band is covered by Q8 and its associated components. Glide Slope frequencies, 329-335 MHz, are generated by an oscillator composed of Q9 and associated components.

3-3. The frequency of the oscillator selected by X1 and X2 is controlled by the voltage from the phase detector on the 12.5 kHz Phase Lock Board. This voltage is integrated by Q1 (2N3251A) and Q2 (2N2222) and applied to varactor diodes CR1 (PC0602D), CR3 (MA45106), and CR4 (MA45106). The voltage controls the capacitance of the varactor diode, in the tuned circuit of the selected oscillator, which controls the output frequency of the oscillator.

3-4. The output of the 70-79.975 MHz, 108-129.975 MHz, or 130-161.4 MHz oscillator is applied to the AGC amplifier Q5 (66382). This signal is buffered and applied to the output buffers Q15-Q18 (66382) and to the gain controller Q6 (66382). When the average d.c. level of the output of Q5 exceeds the combined junction voltages of CR2 (HP2800) and Q6, approximately 1V; Q6 begins to conduct. This brings the voltages on gate 2 of Q4, Q7 and Q8 down to reduce the output of the operating oscillator and to provide automatic gain control.

3-5. The Glide Slope frequencies, 329-335 MHz, are generated by and oscillator consisting of Q9 and associated components. The oscillator frequency is controlled by the integrated voltage from the 12.5 kHz Phase Lock Loop Board phase detector. The voltage is applied to varactor diode CR5. The output of the oscillator is proximity coupled to the input of buffer Q10 (66382). The output of Q10 is applied to the inputs of output buffers Q15 & Q17. The output frequency of the Glide Slope oscillator may be manually adjusted by C30. The Glide Slope oscillator does not use automatic gain control.

4-1. Oscillator Accessory Board Operation.

4-2. The 12.5 kHz and 25 kHz notch filters of the Oscillator Accessory Board are added across the input line from the 12.5 kHz Phase Lock Board. These filters suppress unwanted 12.5 kHz and 25 kHz signals.

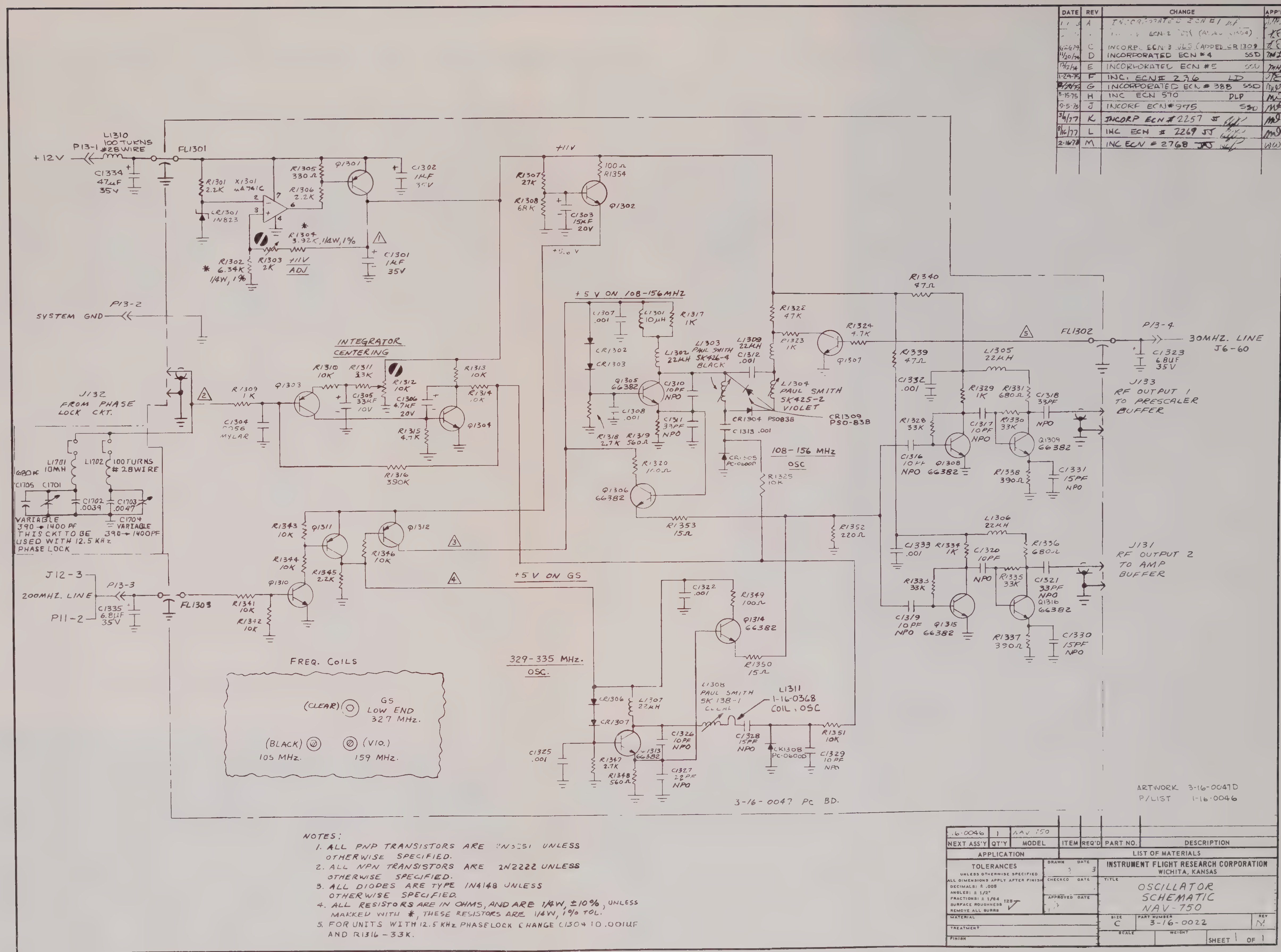

NOTES:
1. ALL PNP TRANSISTORS ARE 2N3251 UNLESS OTHERWISE SPECIFIED.
2. ALL NPN TRANSISTORS ARE 2N2222 UNLESS OTHERWISE SPECIFIED.
3. ALL DIODES ARE TYPE IN4148 UNLESS OTHERWISE SPECIFIED.
4. ALL RESISTORS ARE IN OHMS, AND ARE 1/4W, ±10%, UNLESS MARKED WITH *, THESE RESISTORS ARE 1/4W, 1% TOL.
5. FOR UNITS WITH 12.5 KHz PHASELOCK CHANGE C1304 TO .001UF AND R1316 – 33K.
FREQ. COILS
(CLEAR) GS LOW END 327 MHz.
(BLACK) 105 MHz.
(VIO.) 159 MHz.
INTEGRATOR CENTERING
+5 V ON 108-156 MHZ
108-156 MHz OSC
329-335 MHz. OSC.
+5 V ON GS
J132 FROM PHASE LOCK CKT.
J133 RF OUTPUT 1 TO PRESCALER BUFFER
J131 RF OUTPUT 2 TO AMP BUFFER
30MHZ. LINE J6-60
200MHZ. LINE
SYSTEM GND
+12V
3-16-0047 PC BD.
ARTWORK 3-16-0047D
P/LIST 1-16-0046
INSTRUMENT FLIGHT RESEARCH CORPORATION
WICHITA, KANSAS
OSCILLATOR SCHEMATIC NAV-750
3-16-0022

Fig. 8-42

DATE	REV	CHANGE	APP'D
11/4/76	A	INC ECN #1763 WW	
2/18/77	B	INC ECN # 1832	
3-8-77	C	INC ECN 2016	
6/20/77	D	CHANGED SM CAPS TO NPO, TT	
10/3/77	E	INC ECN# 2412	
12/10/77	F	INC ECN 2641	
4/24/78	G	INC ECN 2840	

70 — 79.975MHz OSC

108 — 129.975MHz OSC

130-161.4MHz OSC

329 — 335MHz OSC

NOTES:

1. MUST BE "EMCON" EQUIV. NPO SERIES ULTRA-STABLE CAPACITOR (5028E0200RD102J)

EFF S/N 381 8 ON

LAST USED NO.	NOS. NOT USED
X 2	Q4,11
Q 18	R 13,12,16,17,32
R53	R 30,31,33,36
C51	C2,11,12,13,14,18
CR 6	L3,4,5
L 7	CR1
FL 4	

ITEM	REQ'D	PART NO	DESCRIPTION

LIST OF MATERIALS

TOLERANCES UNLESS OTHERWISE SPECIFIED ALL DIMENSIONS APPLY AFTER FINISH

SURFACE ROUGHNESS REMOVE ALL BURRS

MATERIAL

FINISH

DRAWN WW 9-28-76

CHECKED

APPROVED

- IFR INC - WICHITA, KANSAS

TITLE: OSCILLATOR SCHEMATIC NAV 750A

SIZE D | PART NUMBER 4-16-0334 | G.

SCALE | WEIGHT | SHEET 1 OF 1

NEXT ASSY | QTY | MODEL | APPLICATION | 16-0332 | — | NAV 750A

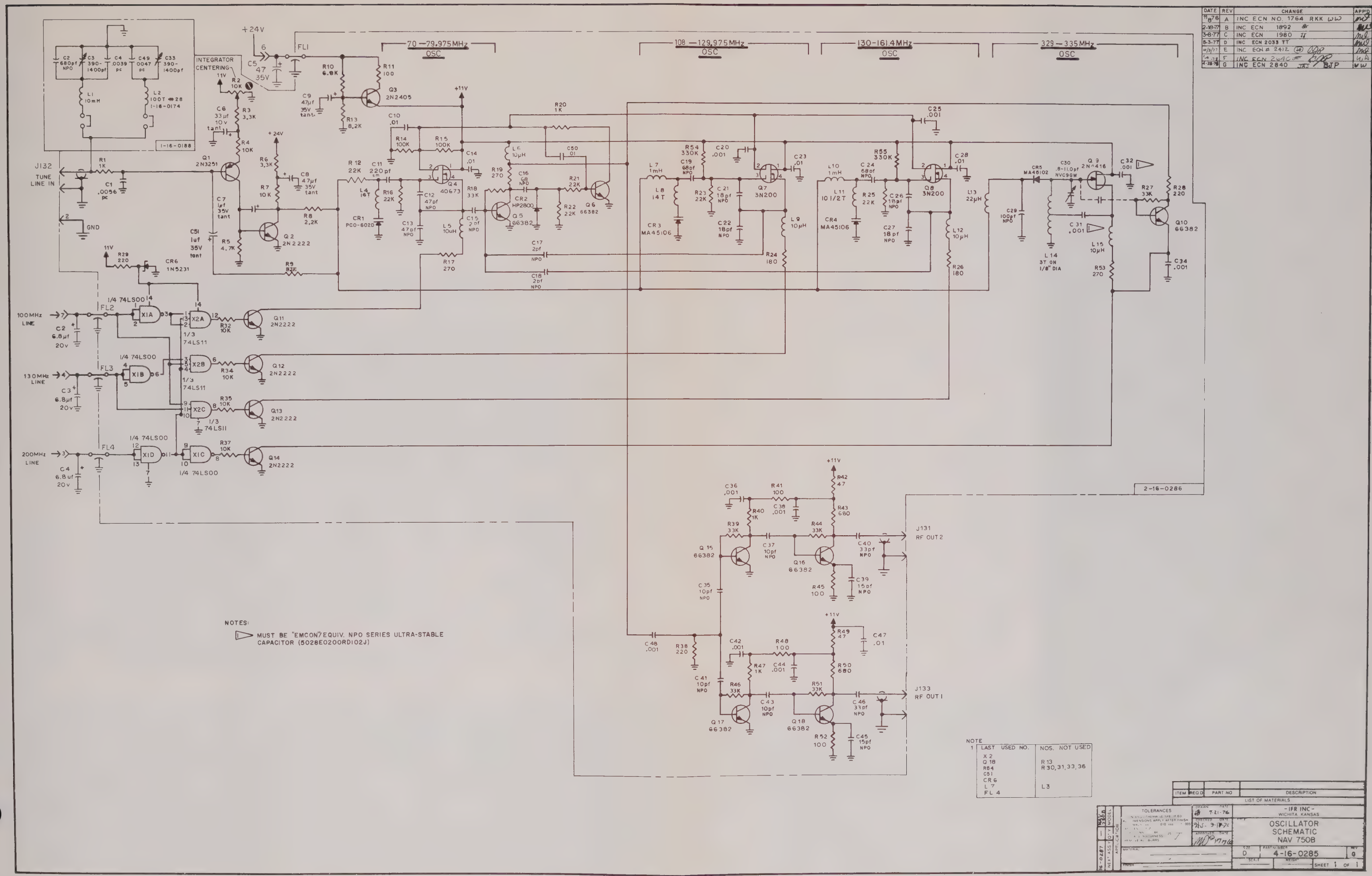

DATE	REV	CHANGE	APP'D
11-8-76	A	INC ECN NO. 1764 RKK WW	
2-18-77	B	INC ECN 1892	
3-8-77	C	INC ECN 1980	
8-3-77	D	INC ECN 2033 TT	
10/3/77	E	INC ECN # 2412	
1-4-78	F	INC ECN 2640	
4-28-78	G	INC ECN 2840 JAJ BJP	WW

Fig. 8-44

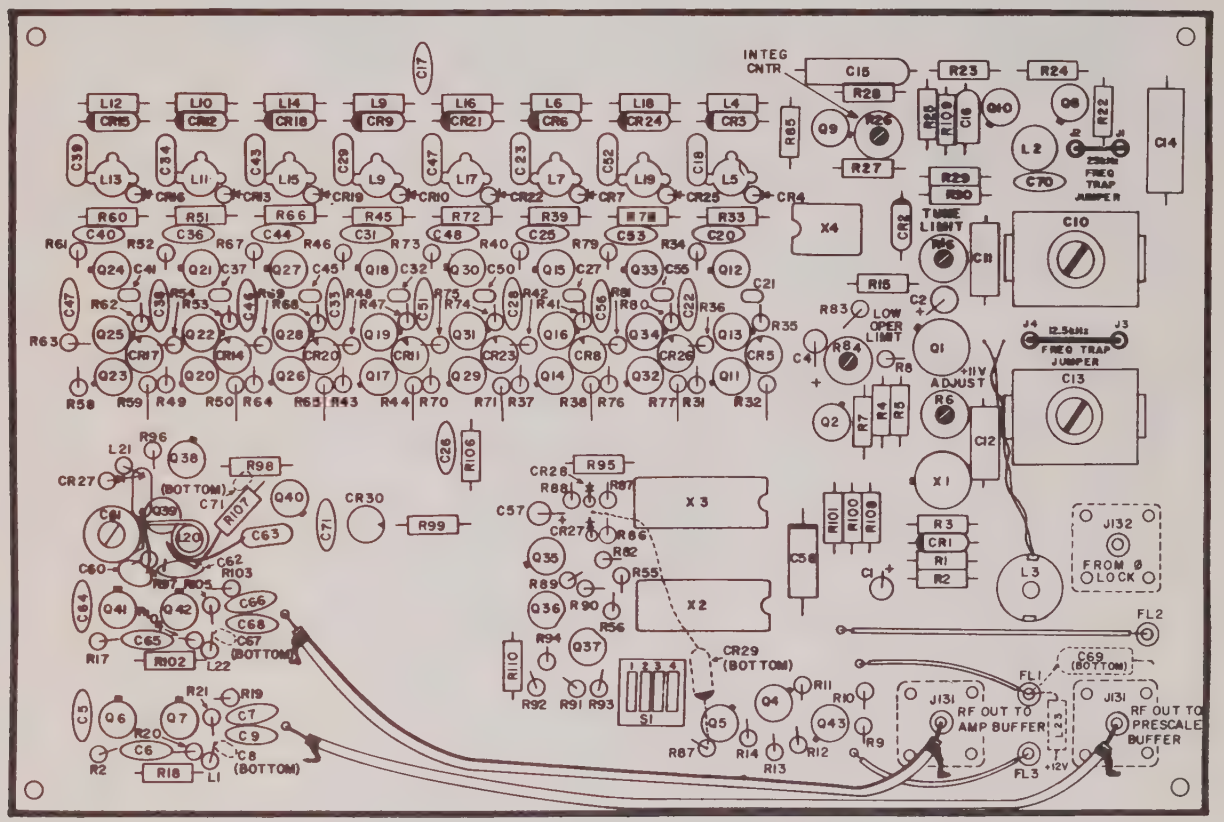

Fig. 8-45 EIGHT-STEP OSCILLATOR BOARD PARTS LAYOUT

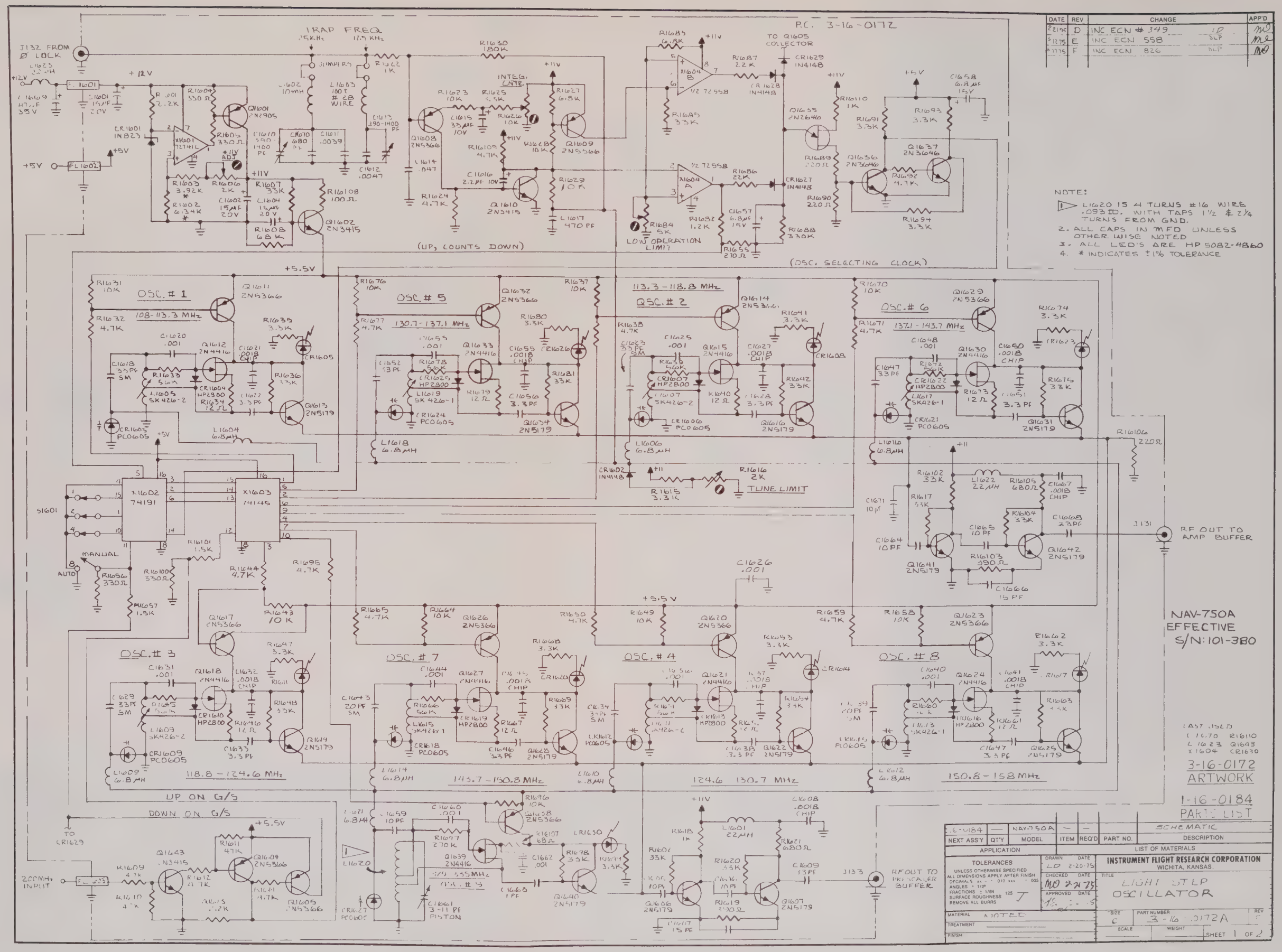
P.C. 3-16-0172
J132 FROM Ø LOCK
TRAP FREQ
25 KHz
12.5 KHz
JUMPERS
INTEG. CNTR.
TO Q1605 COLLECTOR
LOW OPERATION LIMIT
(UP, COUNTS DOWN)
(OSC. SELECTING CLOCK)
OSC. # 1
108-113.3 MHz
OSC. # 5
130.7-137.1 MHz
113.3-118.8 MHz
QSC. # 2
OSC. # 6
137.1-143.7 MHz
TUNE LIMIT
RF OUT TO AMP BUFFER
NAV-750A EFFECTIVE S/N: 101-380
OSC. # 3
118.8-124.6 MHz
OSC. # 7
143.7-150.8 MHz
OSC. # 4
124.6 130.7 MHz
OSC. # 8
150.8-158 MHz
UP ON G/S
DOWN ON G/S
200MHz INPUT
RF OUT TO PRESCALER BUFFER
NOTE:
1. L1620 IS 4 TURNS #16 WIRE .093 ID. WITH TAPS 1½ & 2¼ TURNS FROM GND.
2. ALL CAPS IN MFD UNLESS OTHERWISE NOTED
3. ALL LED'S ARE HP 5082-4860
4. * INDICATES ±1% TOLERANCE
3-16-0172 ARTWORK
1-16-0184 PARTS LIST
SCHEMATIC
LIST OF MATERIALS
INSTRUMENT FLIGHT RESEARCH CORPORATION
WICHITA, KANSAS.
LIGHT STEP OSCILLATOR
3-16-0172A
SHEET 1 OF 2

Fig. 8-46

DATE	REV	CHANGE	APP'D
12-26-74	A	INCORP. ECN # 1 L.D.	MHL

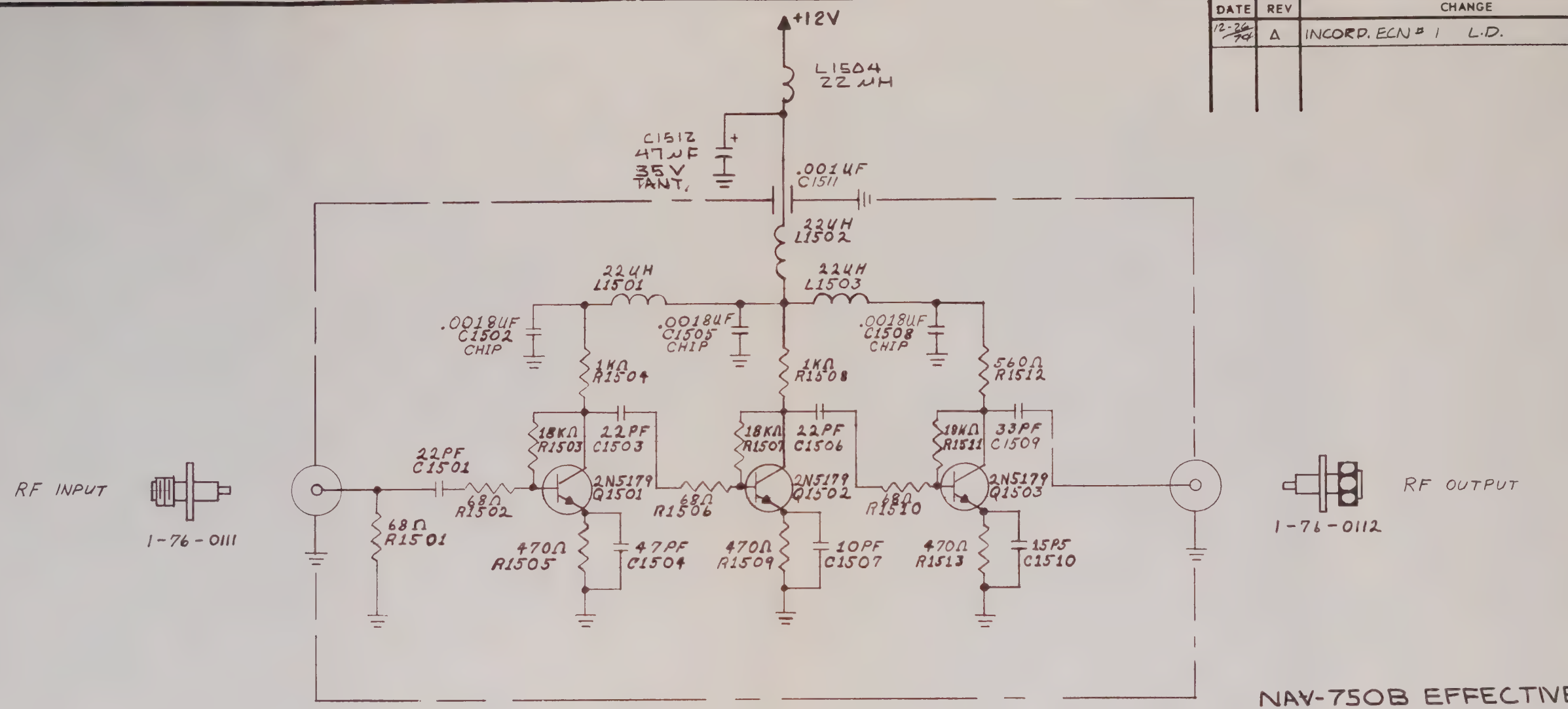

NAV-750B EFFECTIVE S/N 2001 AND ON.

1. ALL CAPACITORS ARE DISC TYPE EXCEPT AS NOTED.

NAV 750A EFF S/N: 101-380

NAV 750 EFF S/N: 101-402

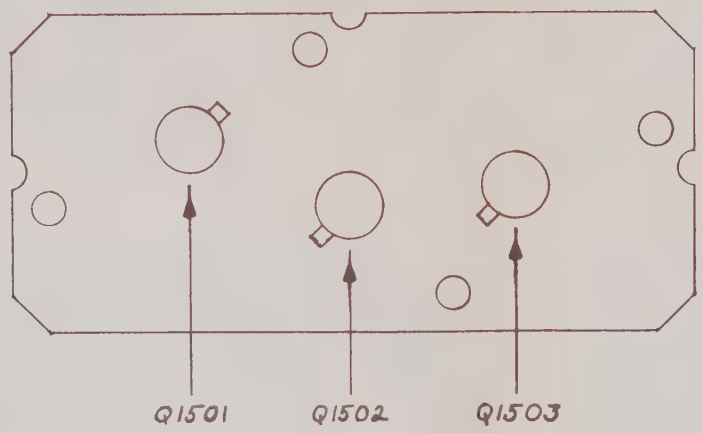

NEXT ASS'Y	QT'Y	NAV 750 MODEL	ITEM	REQ'D	PART NO.	SCHEMATIC DESCRIPTION
APPLICATION						LIST OF MATERIALS

TOLERANCES
UNLESS OTHERWISE SPECIFIED
ALL DIMENSIONS APPLY AFTER FINISH
DECIMALS: ± .005
ANGLES: ± 1/2°
FRACTIONS: ± 1/64
SURFACE ROUGHNESS 125 √
REMOVE ALL BURRS

DRAWN WP 8-14-73
CHECKED 9-17-73
APPROVED 9-17-73

INSTRUMENT FLIGHT RESEARCH CORPORATION
WICHITA, KANSAS

TITLE: NAV 750 BUFFER AMP

MATERIAL
TREATMENT
FINISH

SIZE | PART NUMBER 2-16-0143 | REV A
SCALE | WEIGHT | SHEET OF

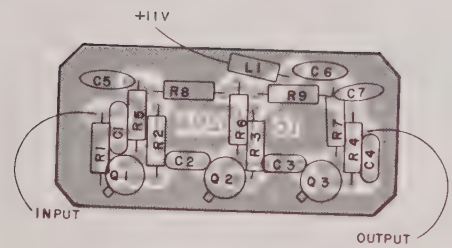

Fig. 8-48 BUFFER AMPLIFIER BOARD PARTS LAYOUT

REV.	DATE	CHANGE	APP'D.
A	4-25-77	INCORP. ECN 2034 TT	mD

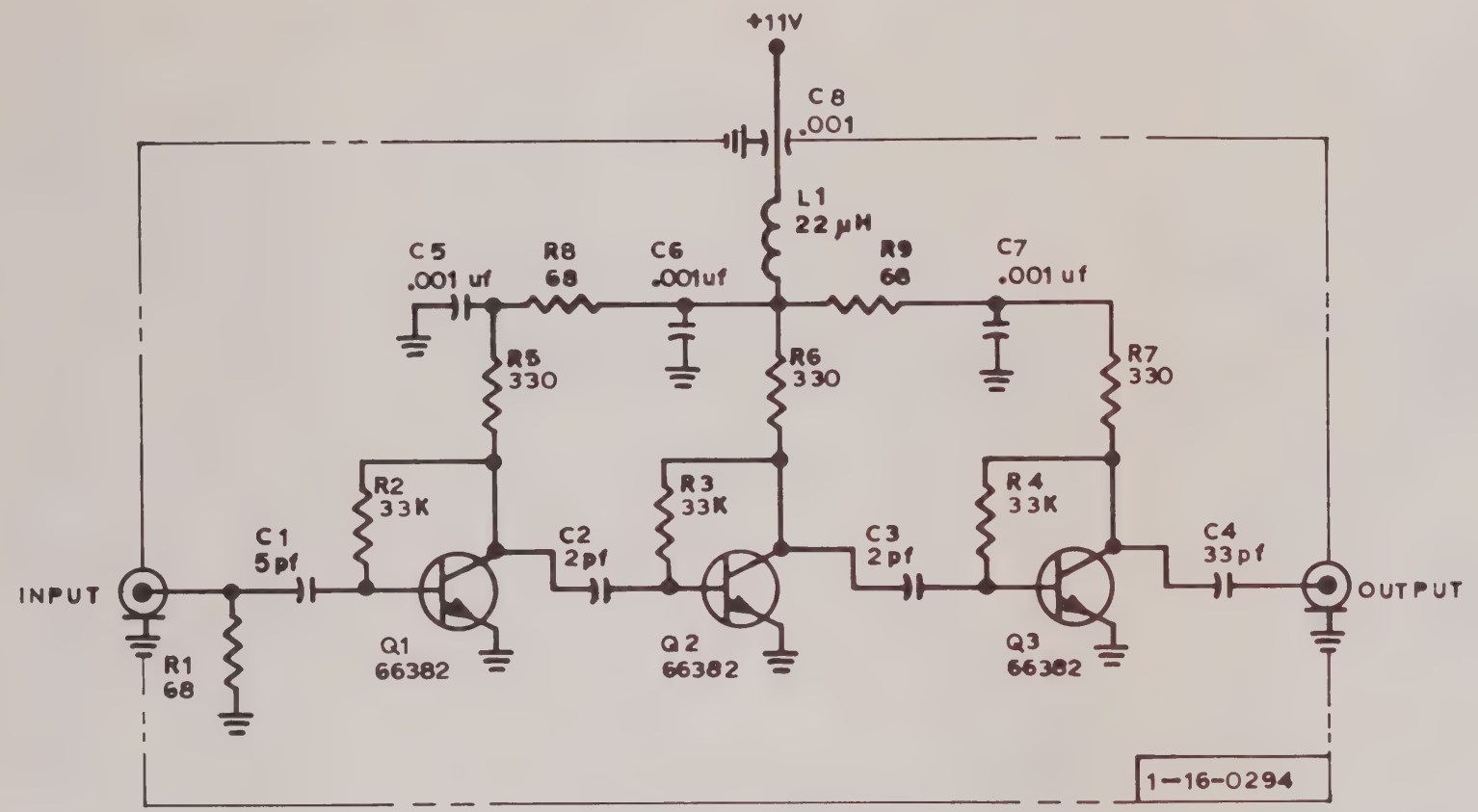

NAV-750 EFFECTIVE S/N: 403 & ON
NAV-750A EFFECTIVE S/N: 381 & ON
NAV-750B EFFECTIVE S/N: 2001 & ON

ITEM	REQ'D	PART NO.	DESCRIPTION

LIST OF MATERIALS

1-16-0310	—	NEXT ASS'Y	QT'Y
NAV 750		MODEL	

APPLICATION

TOLERANCES
UNLESS OTHERWISE SPECIFIED
ALL DIMENSIONS APPLY AFTER FINISH
DECIMALS .xx = ± .010 .xxx = ± .005
ANGLES ± 1/2°
FRACTIONS ± 1/64
SURFACE ROUGHNESS 125 J
REMOVE ALL BURRS

MATERIAL

FINISH

DRAWN DATE 8-30-76
CHECKED DATE 8-30-76
APPROVED DATE 9 15 76

-IFR INC-
WICHITA, KANSAS

TITLE BUFFER AMP. SCHEM NAV-750

SIZE B | DWG NUMBER 2-16-0309 | REV A

SCALE | WEIGHT | SHEET 1 OF 1

Fig. 8-49

DATE	REV	CHANGE	APP'D
2-15 -78	A	ORIGINAL RELEASE T.T.	

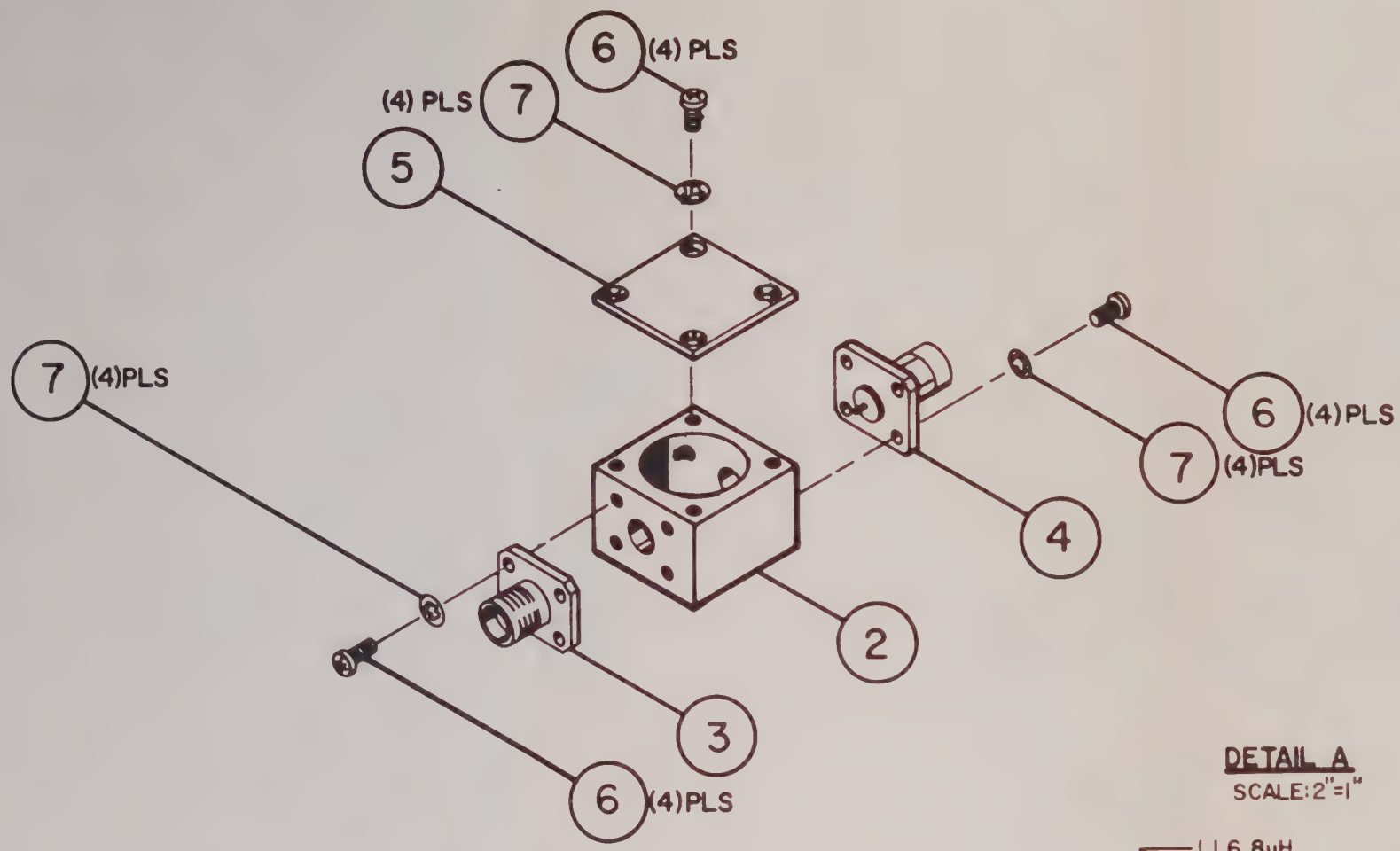

DETAIL A
SCALE: 2"=1"

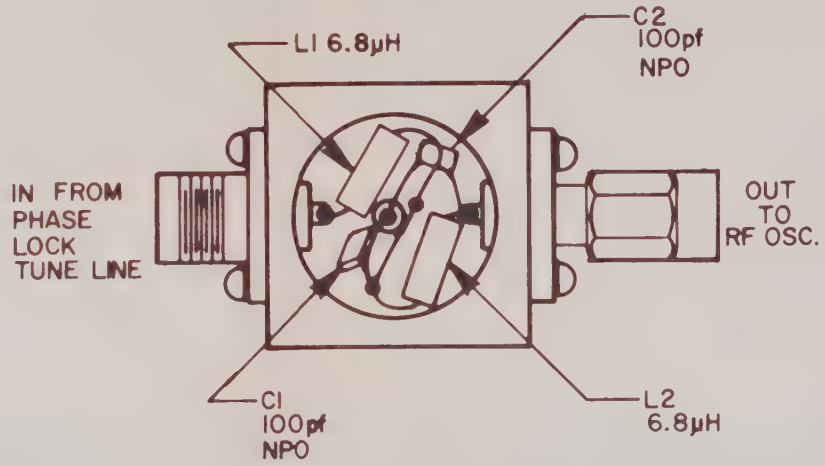

ITEM	REQ'D	PART NO.	DESCRIPTION
REF	1	1-16-0252	TUNE LINE FILTER SCHEMATIC
7	12	#2	INT TOOTH LKWSHR
6	12	#2-56x1/4	PBHMS
5	1	1-18-0079	LID
4	1	1-76-0112	MOD. "AEP"/EQUIV 60-9914-090 SMA MALE CONN
3	1	1-76-0111	MOD. "AEP"/EQUIV 60-9904-090 SMA FEM. CONN.
2	1	1-16-0249	TUNE LINE FILTER BLOCK
1	1	1-16-0250	TUNE LINE FILTER ASSEMBLY

LIST OF MATERIALS

NEXT ASSY 16-0366 | QTY 1 | MODEL 760A/B | APPLICATION

TOLERANCES
UNLESS OTHERWISE SPECIFIED
ALL DIMENSIONS APPLY AFTER FINISH
DECIMALS: xx = ± .010 .xxx = ± .005
ANGLES: ± 1/2°
FRACTIONS ± 1/64
SURFACE ROUGHNESS 125 ✓
REMOVE ALL BURRS

DRAWN TenEyck DATE 2-15-78
CHECKED DATE 2-22-78
APPROVED DATE

MATERIAL SEE L/M
FINISH

-IFR INC-
WICHITA, KANSAS

TITLE
TUNE LINE FILTER ASSEMBLY

SIZE B | PART NUMBER 2-16-0250 | REV A
SCALE 1=1 | WEIGHT — | SHEET 1 OF 1

DATE	REV	CHANGE	APP'D
5-15-75	A	INC ECN 2830 JAJ WW	WW

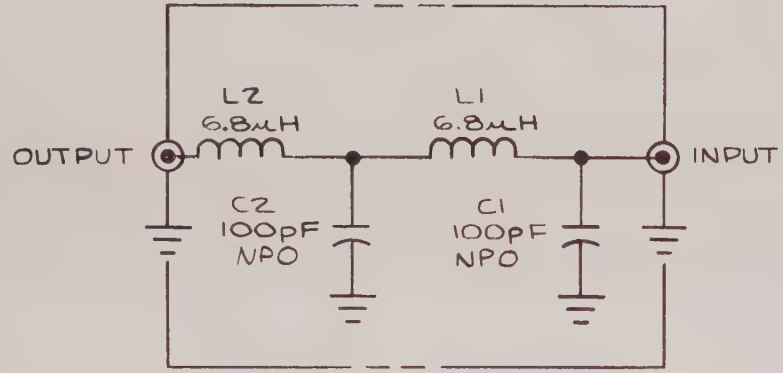

16-0250	A/R	NAV-750/A	1	1	16-0252	FILTER SCHEMATIC
NEXT ASS'Y	QT'Y	MODEL	ITEM	REQ'D	PART NO.	DESCRIPTION

APPLICATION | LIST OF MATERIALS

TOLERANCES
UNLESS OTHERWISE SPECIFIED
ALL DIMENSIONS APPLY AFTER FINISH
DECIMALS: .xx = ± .010 .xxx = ± .005
ANGLES: ± 1/2°
FRACTIONS: ± 1/64
SURFACE ROUGHNESS 125
REMOVE ALL BURRS

DRAWN JNV DATE 5-13-75
CHECKED DLP DATE 5-15-75
APPROVED HJ. DATE 5-10-75

INSTRUMENT FLIGHT RESEARCH CORPORATION
WICHITA, KANSAS.

TITLE
TUNE LINE FILTER
SCHEMATIC
NAV-750/A

MATERIAL	SIZE	PART NUMBER	REV
TREATMENT	A	1-16-0252	A
FINISH	SCALE —	WEIGHT —	SHEET 1 OF 1

Fig. 8-51

SECTION IX

PARTS LISTING

9.1 INTRODUCTION. The parts list included in this section is a listing primarily of active components and those which may require replacing. Other mechanical parts are listed on mechanical assembly drawings in the last portion of this section. Table 9-1, at the conclusion of the parts list, is a recommended spares level for one year for any one of the NAV-750 series bench test sets. Unless otherwise indicated, the parts listed herein are valid for all model NAV-750 test sets.Effect-ivities for each assembly or group of components are indicated at the beginning of each listing where necessary.

9.2 Front Panel Assy

Dwg. and Ref. Symbol	Part No.	IFR. Stock No.	Description	Qty. Per Assy
4-16-0141 or 4-16-0327 for NAV-750B units		1-16-0029	Front Panel Assy.	REF
S-1 thru 14, S27, & 33	30-1		. Pushbutton Switch, GRAYHILL/Equiv.	16
S-15, 17, 18, 23, & 31	CK7101		. Switch, C&K/Equiv.	5
S-16		1-76-0042	. Switch, 5 position, CENTRALAB/Equiv (NAV-750/A only)	1
S-16		1-76-0277	. Switch, 9 position, (NAV-750B only)	1
S-25		1-16-0126	. Localizer DDM Switch Assy. (NAV-750 only)	1
		1-76-0116	. . Switch, CENTRALAB	1
S-25		1-16-0230	. Localizer DDM Switch Assy. (NAV-750A & B)	1
		1-76-0116	. . Switch, CENTRALAB	1
S-26		1-16-0127	. G/S DDM Switch Assy. (NAV-750 only)	1
		1-76-0116	. . Switch CENTRALAB	1
S-26		1-16-0229	. G/S DDM Switch Assy (NAV-750A & B)	1
		1-76-0116	. . Switch, CENTRALAB	1

Dwg. and Ref. Symbol	Part No.	IFR. Stock No.	Description	Qty. Per Assy
S-28		3-76-0055-1	. Switch, Thumbwheel EECO/Equiv.	1
S-29	CK7201		. Switch, C&K/Equiv.	1
S-30	90EA1C4-F3J2RN2		. Line Switch, MASTER SPEC. Inc/ Equiv.	1
S-32	51CD30-01-1-AJN		. Switch, GRAYHILL/ Equiv.	1
		1-16-0045	. Bearing Select Assy.	1
I-1 & 2	H13A1		. . Interrupter Module, GE/Equiv.	2
M-1		1-76-0097-1	. Meter, (0-500μA) HONEYWELL/Equiv.	1
	208709-84-001		. Meter Bezel JEWEL/ Equiv.	1
AT-1		3-76-0094	. Attenuator, WEINSCHEL/Equiv.	1
L-1, 7 & 8, 12	DHO-30B -D14B		. Light Holder, ELDEMA/Equiv.	4
L-1, 7, & 8	CFO3-GCS -1762		. . Light, Green ELDEMA/Equiv.	3
L-12	CFO3-BCS -1762		. . Light, Blue ELDEMA/Equiv.	1
L-2 thru 6, L-9, & 13 thru 16	5082-4860		. L.E.D., HP/Equiv.	10
R-1		1-76-0003	. Potentiometer, CLAROSTAT/Equiv.	1
R-7 & 8	RV6LAYS A252A		. Potentiometer, CLAROSTATE/Equiv	2

Dwg. and Ref. Symbol	Part No.	IFR. Stock No.	Description	Qty. Per Assy
R-9 & 10		1-76-0107	. Potentiometer, CLAROSTAT/Equiv.	2
R-11		1-76-0099	. Potentiometer, CLAROSTAT/Equiv.	1
R-19 thru 22		1-76-0083	. Potentiometer, CLAROSTAT/Equiv.	4
		1-00-0056-2	. Bar knob for Meter Function, LOC, and G/S Switches	3
		1-00-0057-1	. Round knob for BEARING ZERO control.	1
		1-00-0056-1	. Bar knob for Channel Spacing Selector	1
		1-00-0057-2	. Round knob for 1020 Hz, 9960 Hz 30 Hz, Master, LOC, G/S Mod, and Channeling Controls.	7
		1-00-0057-3	. Round knob for Delta F control	1
		2-00-0130	. Knob and skirt Assembly for Bearing Control	1
		1-16-0205	. Delta F Tuning Cap. Assy.	1
	11SX21-T		. . Switch, Micro/Equiv.	1
		3-76-0063-22	. . 10.0065 MHz Crystal K.W./ Equiv.	1

Dwg. and Ref. Symbol	Part No.	IFR. Stock No.	Description	Qty. Per Assy.
3-16-0178-1		1-16-0034	. Digital Display Assy.	1
		1-16-0158	. . Digital Display Board Assy.	1
		3-16-0004	. . . Digital Display P.C. Board	1
X1401 thru X1406	DD700		. . . Logic, Sperry	6
X1407 thru X1412	SN7475N		. . . Logic, T.I./ Equiv.	6
X1413 thru X1418	SN7490N		. . . Logic, T.I./ Equiv.	6
3-16-0178-1		1-16-0159	. . Digital Readout Gating Bd. Assy.	1
		3-16-0131	. . . Digital Readout Gating PC Bd.	1
X1419, 1427 & 1428	SN7400N		. . . Logic, T.I./ Equiv.	3
X1420 & 1421	SN74S00N		. . . Logic T.I./ Equiv.	2
X1422	SN74S112		. . . Logic, SOLID STATE/Equiv.	1
X1423 thru 1426	SN7490N		. . . Logic, T.I./ Equiv.	4
Q1 thru Q8	2N3646		. . . Transistor, NATIONAL/Equiv.	8
Q9 thru Q11	2N2896		. . . Transistor, MOTOROLA/Equiv.	3
	.125F40-152-14		. . . Flex Strip ANSLEY/Equiv.	A/R

Dwg. and Ref. Symbol	Part No.	IFR. Stock No.	Description	Qty. Per Assy.
3-16-0178-1		1-16-0160	. . Digital Display Board Assy.	1
		3-16-0003	. . . Digital Display PC Board	1
	SP-352		. . . Readout, BECKMAN	3
	CS-352		. . . Socket, BECKMAN	3
3-16-0206		1-16-0222	. . Counter Input Divider PC Bd. Assy.	1
		1-16-0220	. . . Counter Input Divider PC Board	1
X1101	MC12013		. . . IC, MOTOROLA/ Equiv.	1
Q1110 & 1111	2N5179		. . . Transistor, RCA/ Equiv.	2
CR1103 & 1104	HP2800		. . . Diode, HP/Equiv.	2

9.3 Back Panel Assy.

Dwg. and Ref. Symbol	Part No.	IFR. Stock No.	Description	Qty. Per Assy.
3-16-0142 A & B		1-16-0051	Back Panel Assy.	REF
		3-16-0050	. Back Panel	1
Q1601	2N4398		. Transistor, MOTOROLA/Equiv.	1
X1601	LM340K-24		. Regulator, NATIONAL-SEMICONDUCTOR/Equiv.	1
X1602	LM340K-12		. Regulator, NATIONAL-SEMICONDUCTOR/Equiv.	1
X1603	LM309K-5		. Regulator, NATIONAL-SEMICONDUCTOR/Equiv.	1
X1604	LM320K-12		. Regulator, NATIONAL-SEMICONDUCTOR/Equiv.	1
T-1	NT1891	2-76-0120	. Transformer,NATIONAL-TRANSFORMER/Equiv.	1
CR1601 & 1602	VH-248		. Bridge Rectifier VARO/Equiv.	2
CR1603	PK-10		. Bridge Rectifier ELECTRONICS DEV./ Equiv.	1
CR1604	1N5171		. Diode, SOLOTRON/ Equiv.	1
CR1607 & 1611	1N4148		. Diode, DICKSON/ Equiv.	2
3-16-0142A		1-16-0120	. 200V dc Power Supply Assy. (All units S/N 101-447)	1
Q1602	40321		. . Transistor, RCA/ Equiv.	1
CR1605	1N5278		. . Zener, DICKSON/ Equiv.	1

Dwg. and Ref. Symbol	Part No.	IFR. Stock No.	Description	Qty. Per Assy.
CR1606 & 1607	1N4004		. . Diode, MOTOROLA/ Equiv.	2
CR1608, 09 & 10	1N4148		. . Diode, DICKSON/ Equiv.	3
3-16-0142B		1-00-0160	. 170V dc Power Supply Assy. (All units S/N 488 & on)	1
		1-00-0159	. . 170V dc Power Supply PC Board	1
Q1	40321		. . Transistor, RCA/ Equiv.	1
CR1	1N4004		. . Diode, MOTOROLA/ Equiv.	1
CR2, 3, & 4	1N4148		. . Diode, DICKSON/ Equiv.	3
CR5	1N5278		. . Zener, DICKSON/ Equiv.	1

9.4 Card Cage Assy.

Dwg. and Ref. Symbol	Part No.	IFR. Stock No.	Description	Qty. Per Assy.
		1-16-0036	Card Cage Assy. (for NAV-750/A)	REF
		or		
		1-16-0331	Card Cage Assy. (for NAV-750B)	REF
	4800A	2-76-0109	. Fan, PAMOTOR/ Equiv. (50 & 60 Hz operation only)	1
		2-76-0031	. Card rail (Red)	2
		2-76-0032	. Card rail (Green)	2
		2-76-0033	. Card rail (Blue)	2
		2-76-0075	. Card rail (Brown)	2
		2-76-0076	. Card rail (Orange)	2
		2-76-0077	. Card rail (Yellow)	2
		2-76-0078	. Card rail (Violet)	2
3-16-0021		1-16-0041	. Bearing Check Bd. Assy. (PC-1)	1
		3-16-0010	. . Bearing Check PC Board.	1
X101, 105	SN72741L		. . IC, T.I./Equiv.	3
X102, 103 104, 107, 108, & 110	72558 or SN1458		. . IC, T.I. or SIGNETICS only	6
X106	SN72709L		. . IC, T.I./Equiv.	1
Q101, 105 & 108	2N3251		. . Transistor, NATIONAL/Equiv.	4
Q102	2N5366		. . Transistor, MOTOROLA/Equiv.	1

Dwg. and Ref. Symbol	Part No.	IFR. Stock No.	Description	Qty. Per Assy.
Q104, 107, & 109	2N2222		. . Transistor, MOTOROLA/Equiv.	3
Q106	2N2646		. . Transistor, G.E.	1
Q110	2N2405		. . Transistor, RCA	1
CR101 thru 105, & CR111	1N4148		. . Diode, SOLID STATE	6
CR106	1N823		. . Zener, MOTOROLA	1
CR107 thru 110	HP2800		. . Diode, HP/Equiv.	4
R118 & R129	62-1-1-202		. . . Trim Pot./ SPECTROL (round)	2
R147 & R153	62-1-1-203		. . . Trim Pot./ SPECTROL (round)	2
R130 & R158	62-1-1-501		. . . Trim Pot./ SPECTRAL	2

Dwg. and Ref. Symbol	Part No.	IFR. Stock No.	Description	Qty. Per Assy.
NOTE: This circuitry installed in NAV-750/A/B at manufacturer's option only.				
3-16-0370		1-16-0371	. . Bearing Corrector Ckt. Assy.	1
		2-16-0369	. . . Bearing Corrector PC Bd.	1
X2 & X4	CA3130T		. . . IC, RCA/Equiv.	2
X5 thru 8	TL084CN		. . . IC, T.I./Equiv.	4
X1	CD4011		. . . Logic, RCA/ Equiv.	1
X3	CD4066		. . . Logic, RCA/ Equiv.	1
CR1 & 2	1N5234B		. . . Zener, MOTOROLA/ Equiv.	2
R18, 29, 46, & 47	62-1-1-503		. . . Trim Pot. SPECTROL/Equiv.	4

Dwg. and Ref. Symbol	Part No.	IFR. Stock No.	Description	Qty. Per Assy.
4-16-0290		1-16-0027	. 30 Hz Sine Bd Assy. (PC-2)	1
		3-16-0008 or 3-16-0288	. . 30 Hz Sine PC Bd.	1
X2001 thru 2008, & X2011 & 2012	SN72741L		. . . IC, T.I./Equiv.	10
X2009 & 2010	SN72709L		. . IC, T.I./Equiv.	2
X2013 & 2014	SN7493N		. . Logic, T.I./Equiv.	2
X2015	SN7473N		. . Logic, T.I./Equiv.	1
X2016	SN7420N		. . Logic, T.I./Equiv.	1
Q2001 & 2002	UC714/ 734 or 2N4223		. . Transistor, UNION CARBIDE/Equiv.	2
Q2003 & 2005, A & B	2N3415 or 2N2222		. . Transistor, SOLID STATE/Equiv.	4
Q2004 & 2006, A & B	2N5366 or 2N3251		. . Transistor, SOLID STATE/Equiv.	4
Q2007, 2011 & 2013	2N5366 or 2N3251		. . Transistor, SOLID STATE/Equiv.	3
Q2008, 2012 & 2014	2N3415 or 2N2222		. . Transistor, SOLID STATE/Equiv.	3
Q2009	2N3646		. . Transistor, NATIONAL/Equiv.	1

Dwg. and Ref. Symbol	Part No.	IFR. Stock No.	Description	Qty Per Assy.
CR2001 thru 2016 (4 times) CR2017 thru CR2020	1N4148		. . Diode, SOLID STATE/Equiv.	68
For NAV-750/A Models:				
R2001, 2039, & 2041	62-1-1-103		. . Trim Pot. SPECTROL/Equiv.	3
R2005, 2043, 2058, & 2087	62-1-1-203		. . Trim Pot. SPECTROL/Equiv.	4
R2051 & R2068	62-1-1-502		. . Trim Pot. SPECTROL/Equiv.	2
R2074 & R2085	62-1-1-202		. . Trim Pot. SPECTROL/Equiv.	2
For NAV-750 B Models:				
R2001, 2039, 2041, & 2089	62-1-1-103		. . Trim Pot. SPECTROL/Equiv.	4
R2005, 2043, 2058, & 2087	62-1-1-203		. . Trim Pot. SPECTROL/Equiv.	4
R2051 & R2068	62-1-1-502		. . Trim Pot. SPECTROL/Equiv.	2
R2074 & R2085	62-1-1-202		. . Trim Pot. SPECTROL/Equiv.	3
R2092	62-1-1-102		. . Trim Pot. SPECTROL/Equiv.	1

Dwg. and Ref. Symbol	Part No.	IFR Stock No.	Description	Qty. Per Assy.
3-16-0020		1-16-0028	. Tone Summation Board Assy. (PC-3) (For NAV-750/A only)	1
		3-16-0017	. . Tone Summation PC Board	1
X301, 307, 309, 310, 313, 315, & 316	MC1458		. . IC, SIGNETICS or T.I.	7
X302 & 317	MC1458		. . IC, SIGNETICS or T.I. only	2
X303	SN72709L		. . IC, T.I./Equiv.	1
X304, 305, 306, 308, 312, & 318	SN72741L		. . IC. T.I./Equiv.	6
X311	SN7400N		. . IC, T.I./Equiv.	1
X314	SN7410N		. . Logic, T.I./ Equiv.	1
Q301 thru 312	UC714/ 734		. . Transistor, UNION CARBIDE/ Equiv.	12
Q313	2N2405		. . Transistor, RCA/ Equiv.	1
Q314	2N2905		. . Transistor, FAIRCHILD/Equiv.	1
Q315, 316, & 317	2N3415		. . Transistor, SOLID STATE/ Equiv.	3
CR301	1N4148		. . Diode, SOLID STATE/Equiv.	1
CR303	1N823		. . Zener, MOTOROLA Equiv.	1

Dwg. and Ref. Symbol	Part No.	IFR Stock No.	Description	Qty. Per Assy.
R312, 332, 343, 364, & 365	62-1-1-502		. . Trim Pot. SPECTROL/Equiv.	5
R326 & 343	62-1-1-103		. . Trim Pot. SPECTROL/Equiv.	2
R349 & 363	62-1-1-202		. . Trim Pot. SPECTROL/Equiv.	2
R348	62-1-1-102		. . Trim Pot. SPECTROL/Equiv.	1
4-16-0298		1-16-0300	. Tone Summation Board Assy. (PC-3) (For NAV-750 B only)	1
		3-16-0289	. . Tone Summation PC Board	1
X301, 307, 309, 310, 313, 315, 316, & 319	MC1458		. . IC, SIGNETICS or T.I.	8
X302 & 317	MC1458		. . IC, SIGNETICS or T.I. only	2
X303	SN72709L		. . IC, T.I./Equiv.	1
X304, 305, 306, 308, 312, & 318	SN72741L		. . IC, T.I./Equiv.	6
X311	SN7400N		. . Logic, T.I./ Equiv.	1
X314	SN7410N		. . Logic, T.I./ Equiv.	1

Dwg. and Ref. Symbol	Part No.	IFR Stock No.	Description	Qty. Per Assy.
Q301 thru 312, & 318 thru 320	2N4223		. . Transistor, NATIONAL/Equiv.	15
Q313	2N2405		. . Transistor, RCA/Equiv.	1
Q314	2N2905		. . Transistor, FAIRCHILD/Equiv.	1
Q315, 316, & 317	2N2222		. . Transistor, MOTOROLA/Equiv.	1
CR301	1N4148		. . Diode, SOLID STATE/Equiv.	1
CR303	1N823		. . Zener, MOTOROLA/Equiv.	1
R312, 332, 343, 364, & 365	62-1-1-502		. . Trim Pot. SPECTROL/Equiv.	5
R325 & 326	62-1-1-103		. . Trim Pot. SPECTROL/Equiv.	2
R348	62-1-1-102		. . Trim Pot. SPECTROL/Equiv.	1
R349, 363, & 347	62-1-1 202		. . Trim Pot. SPECTROL/Equiv	1
4-16-0025		1-16-0040	. Bearing Logic Board Assy. (PC-4)	1
		3-16-0007	. . Bearing Logic PC Board	1
X401, 407, 412, 415, 431, & 432	SN7400N		. . Logic, T.I.	6

Dwg. and Ref. Symbol	Part No.	IFR. Stock No.	Description	Qty. Per Assy.
X402, 428, 429, & 430	SN7473N		. . Logic, T.I.	4
X403 thru 406, & 423, 424, 425, & 427	SN7490N		. . Logic, T.I.	8
X408	SN7404N		. . Logic, T.I.	1
X409, 410, 411, & 413	SN74190N		. . Logic, T.I.	4
X414	SN74191		. . Logic, T.I.	1
X416, 417, 418, 420, & 421	DM8200N		. . Logic, T.I.	5
X419	SN7430N		. . Logic, T.I.	1
X422	SN7410N		. . Logic, T.I.	1
X426, 433, & 434	SN7492N		. . Logic, T.I.	3
X435	SN7420N		. . Logic, T.I.	1
X436	SN74123N		. . Logic, T.I.	3
C401	429		. . Trimmer Cap., ARCO	1
Y401		3-76-0063-21	. . Crystal 21.6 MHz K.W.	1
4-16-0025 & 4-16-0024		1-16-0026	. Localizer/Bearing Control Bd. Assy. (PC-5)	1

Dwg. and Ref. Symbol	Part No.	IFR. Stock No.	Description	Qty. Per Assy.
		3-16-0013	. . Localizer/ Bearing Control PC Bd.	1
Q5001	2N2646		. . Transistor, GE/ Equiv.	1
Q5002 & 04 A&B	2N3251		. . Transistor, MOTOROLA/Equiv.	4
Q5003 & 05 A&B	2N2222		. . Transistor, MOTOROLA/Equiv.	4
X5001 thru 5004 & X5006 & 5007	SN7430N		. . Logic, T.I./ Equiv.	6
X5005	SN7420N		. . Logic, T.I./ Equiv.	1
X5008 & 5010	SN7404N		. . Logic, T.I./ Equiv.	2
X5009	SN7402N		. . Logic, T.I./ Equiv.	1
X5011 & 5019	SN7400N		. . Logic, T.I./ Equiv.	2
X5012	SN74123N		. . Logic, T.I./ Equiv.	1
X5013 & 5014	SN72709L		. . IC, T.I./Equiv.	2
X5015, 5016, & 5017	SN72741L		. . IC, T.I./Equiv.	3
X5018	MC1458		. . IC, MOTOROLA only.	2

Dwg. and Ref. Symbol	Part No.	IFR. Stock No.	Description	Qty. Per Assy.
CR5001 thru 5004	1N4148		. . Diode, SOLID STATE/Equiv.	4
CR5005 thru 5020 A&B	1N4148		. . Diode, SOLID STATE/Equiv.	32
R5049 & 5078	62-1-1-502		. . Trim Pot. SPECTROL/Equiv.	2
R5082 & 5085	62-1-1-203		. . Trim Pot. SPECTROL/Equiv.	2
		1-16-0035	. Frequency Control Bd. Assy. (PC-6) (NAV-750/A)	1
4-16-0326		1-16-0302	. Frequency Control Bd. Assy. (PC-6) (NAV-750B)	1
		3-16-0254	. . Frequency Control PC Board	1
X601, 610, & 611	SN7442N		. . Logic, T.I./ Equiv.	3
X602, 621, & 623	SN7420N		. . Logic, T.I./ Equiv.	3
X603, 607, 615, & 629 thru 634	SN7400N		. . Logic, T.I./ Equiv.	9
X604, 605, & 613	SN7430N		. . Logic, T.I./ Equiv.	3
X606	SN7404N		. . Logic, T.I./ Equiv.	1
X608	SN7405N		. . Logic, T.I./ Equiv.	1

Dwg. and Ref. Symbol	Part No.	IFR. Stock No.	Description	Qty. Per Assy.
X609	MM5220		. . IC, NATIONAL/ Equiv.	1
X612	SN7476N		. . Logic, T.I./ Equiv.	1
X614	SN7490N		. . Logic, T.I./ Equiv.	1
X616 thru 619	9322		. . Logic, FAIR-CHILD/Equiv.	4
X620	SN74121N		. . Logic, T.I./ Equiv.	1
X622	SN7473N		. . Logic, T.I./ Equiv.	1
X624	SN74191N		. . Logic, T.I./ Equiv.	1
X625, 626, & 627	SN74190N		. . Logic, T.I./ Equiv.	3
X628	SN7402N		. . Logic, T.I./ Equiv.	1
X635	SN72709L		. . IC, T.I./ Equiv.	1
Q601	2N2646		. . Transistor, GE	1
Q602, 603	2N3415		. . Transistor, SOLID STATE	2
CR601 thru 605	1N4148		. . Diode, SOLID STATE	5
3-16-0018		1-16-0042	. Remote Channeling Bd. Assy. (PC-7)	1
		3-16-0012	. . Remote Channeling PC Board	1

Dwg. and Ref. Symbol	Part No.	IFR. Stock No.	Description	Qty. Per Assy.
X701, 703, 705, & 707	SN7442N		. . Logic, T.I./ Equiv.	4
X702 & 706	SN7400N		. . Logic, T.I./ Equiv.	2
X704	SN7404		. . Logic, T.I./ Equiv.	1
X708 thru 717	SN7420		. . Logic, T.I./ Equiv.	10
Q701 thru 735	2N2222		. . Transistor, SOLID STATE/ Equiv.	36
K701 thru 721	W117 DIP-3		. . Relay, MAGNACRAFT/Equiv.	21
CR701 thru 721	1N4148		. . Diode, SOLID STATE/Equiv.	21
J-8	205860-2		. . Connector, 37 pin AMP	1

9.5 Floor Assy.

Dwg. and Ref. Symbol	Part No.	IFR. Stock No.	Description	Qty. Per Assy.
		1-16-0053	Floor Ass'y	REF
4-16-0019		1-16-0054	. 25 kHz Phase-lock Assy. (Effective all units from S/N 101 to approx. 125)	1
		1-16-0043	. . 25 kHz Phase-lock PC Bd. Assy.	1
		1-16-0044	. . . 25 kHz Phase-Lock PC Bd.	1
X1101, 1105, & 1109	SN7400N		. . . Logic, T.I./ Equiv.	3
X1102 thru 1104, 1106, thru 1108 & 1119	SN7490N		. . . Logic, T.I./ Equiv.	7
X1110	SN7430N		. . . Logic, T.I./ Equiv.	1
X1111	SN74191N		. . . Logic, T.I./ Equiv.	1
X1112 thru X1115	SN74190N		. . . Logic, T.I./ Equiv.	4
X1116	SN7402N		. . . Logic, T.I./ Equiv.	1
X1117	SN7473N		. . . Logic, T.I./ Equiv.	1
X1118	SN7404N		. . . Logic, T.I./ Equiv.	1

Dwg. and Ref. Symbol	Part No.	IFR. Stock No.	Description	Qty. Per Assy.
X1120	SN7420N		. . . Logic, T.I./ Equiv.	1
X1121	SN74121N		. . . Logic, T.I./ Equiv.	1
X1122, 1123, & 1124	MC1027L		. . . Logic, MOTOROLA/Equiv.	3
X1125 & 1126	MC1666L		. . . Logic, MOTOROLA/Equiv.	2
X1127	MC1692L		. . . Logic, MOTOROLA/Equiv.	1
X1128 & 1129	SN72741L		. . . IC, T.I./ Equiv.	2
Q1101 thru 1105, & 1107	2N5179		. . . Transistor, RCA/Equiv.	6
Q1106 & 1121	2N3415		. . . Transistor, SOLID STATE/ Equiv.	2
Q1108, 1109, & 1114	2N3905		. . . Transistor, NATIONAL/Equiv.	3
Q1110, 1113, 1117, & 1122	2N3646		. . . Transistor, NATIONAL/Equiv.	4
Q1111, 1112, & 1118	UC714		. . . Transistor, UNION CARBIDE/ Equiv.	3
Q1115, 1116, & 1120	2N5366		. . . Transistor, SOLID STATE/ Equiv.	3
Q1119	2N5462		. . . Transistor, MOTOROLA (Epoxy)/Equiv.	1

Dwg. and Ref. Symbol	Part No.	IFR. Stock No.	Description	Qty. Per Assy.
CR1101	5082-2800		. . . Diode, HEWLETT-PACKARD/Equiv.	1
CR1102, 1103, & 1105 thru 1108	1N4148		. . . Diode, SOLID STATE/Equiv.	6
CR1104	1N823		. . . Zener, MOTOROLA, Equiv.	1
CR1109	1N5231B		. . . Zener, DICKSON/Equiv.	1
R1135	62-1-1-501		. . . Trim Pot, SPECTROL/Equiv.	1
R1158 & 1168	62-1-1-202		. . . Trim Pot. SPECTROL/Equiv.	2
	42T1-2		. . . Oven, T.I./ Equiv.	1
Y1101	7313		. . . Crystal 10 MHz, McCoy/Equiv.	1
3-16-0206D		1-16-0203	. 12.5 kHz Phase-Lock Assy.	1
		1-16-0202	. . 12.5 kHz Phase-Lock PC Bd. Assy. (Effective All NAV-750/A units S/N 126 thru 169, 171, 181, 182, & 183)	1
		3-16-0176	. . . 12.5 kHz Phase-Lock PC Bd.	1
X1101 & 1121	MC12013L		. . . Logic, MOTOROLA/Equiv.	2
X1102	MC1666L		. . . Logic, MOTOROLA/Equiv	1
X1103	MC1692L		. . . Logic, MOTOROLA/Equiv.	1

Dwg. and Ref. Symbol	Part No.	IFR. Stock No.	Description	Qty. Per Assy.
X1104 & 1113	SN72741L		. . . IC, T.I./ Equiv.	2
X1105, 1107, 1114, & 1123	SN7400N		. . . Logic, T.I./ Equiv.	4
X1106, 1108, 1109, 1110, 1115, & 1116	SN7490N		. . . Logic, T.I./ Equiv.	6
X111, 1112, 1120, & 1126	SN74190N		. . . Logic, T.I./ Equiv.	4
X1117	SN74121N		. . . Logic, T.I./ Equiv.	1
X1118	SN7420N		. . . Logic, T.I./ Equiv.	1
X1119	SN7402N		. . . Logic, T.I./ Equiv.	1
X1122	MC10131L		. . . Logic, MOTOROLA/Equiv.	1
X1124	SN7473N		. . . Logic, T.I./ Equiv.	1
X1125	SN74191N		. . . Logic, T.I./ Equiv.	1
	42T1-2		. . . Oven, T.I./ Equiv.	1
Y1101		3-76-0063-24	. . . Crystal, 10MHz K.W./Equiv.	1
CR1101, 1103, 1104, 1108, & 1109	5082-2800		. . . Diode, HP/Equiv.	5

Ref. and Dwg. Symbol	Part No.	IFR. Stock No.	Description	Qty. Per Assy.
CR1102, 1105, 1106, 1107, & 1112	1N4148		. . . Diode, SOLID STATE/Equiv.	5
CR1110	1N823		. . . Zener, MOTOROLA/Equiv.	1
CR1111	1N5231B		. . . Zener, DICKSON/Equiv.	1
Q1101, 1102, 1103, 1105, 1106, 1109, 1110, 1111, 1117, & 1124	2N5179		. . . Transistor, RCA/Equiv.	10
Q1104, & 1108	2N3415		. . . Transistor, SOLID STATE/ Equiv.	2
Q1118 & 1112 thru 1115	2N3646		. . . Transistor, NATIONAL/Equiv.	5
Q1107, 1116, & 1121	2N5366		. . . Transistor, SOLID STATE/ Equiv.	3
Q1120 & 1122	UC714		. . . Transistor, UNION CARBIDE/ Equiv.	2
Q1123	2N5462		. . . Transistor, MOTOROLA/Equiv.	1
R1155 & 1181	62-1-1-202		. . . Trim Pot. SPECTROL/Equiv.	2

Dwg. and Ref. Symbol	Part No.	IFR. Stock No.	Description	Qty. Per Assy
3-16-0206L		1-16-0253	. . 12.5 kHz Phase-Lock PC Bd. Assy. (Effective All NAV-750/A units S/N 170, 172, thru 180, 184 and on).	1
		3-16-0176	. . . 12.5 kHz Phase-Lock PC Bd.	1
X1102	MC1666L		. . . Logic, MOTOROLA/Equiv.	1
X1103	MC1692L		. . . Logic, MOTOROLA/Equiv.	1
X1104 & 1113	SN72741L		. . . Logic, T.I./Equiv.	2
X1105, 1107, 1114, & 1123	SN7400N		. . . Logic, T.I./Equiv.	4
X1106, 1108, 1109, 1110, 1115, & 1116	SN7490N		. . . Logic, T.I./ Equiv.	6
X1111, 1112, 1120, & 1126	SN74190N		. . . Logic, T.I./ Equiv.	4
X1117	SN74121N		. . . Logic, T.I./ Equiv.	1
X1118	SN7420N		. . . Logic, T.I./ Equiv.	1
X1119	SN7402N		. . . Logic, T.I./ Equiv.	1
X1121	MC12013L		. . . Logic, MOTOROLA/Equiv.	1

Dwg. and Ref. Symbol	Part No.	IFR. Stock No.	Description	Qty. Per Assy.
X1122	MC10131L		. . . Logic, MOTOROLA/Equiv.	1
X1124	SN7473N		. . . Logic, T.I./ Equiv.	1
X1125	SN74191N		. . . Logic, T.I./ Equiv.	1
	42T1-2		. . . Oven, T.I./ Equiv.	1
Y1101		3-76-0063-24	. . . Crystal, 10 MHz K.W./Equiv.	1
CR1101, 1108, & 1109	5082-2800		. . . Diode, HP/Equiv.	3
CR1102, 1105, 1106, 1107, & 1112	1N4148		. . . Diode, DICKSON/ Equiv.	5
CR1110	1N823		. . . Zener, MOTOROLA/Equiv.	1
CR1111	1N5231B		. . . Zener, DICKSON/Equiv.	1
Q1101, 1102, 1103, 1105, 1106, 1109, 1117, & 1124	66382		. . . Transistor, RCA/Equiv.	8
Q1104 & 1108	2N2222		. . . Transistor, MOTOROLA/Equiv.	2

Dwg. and Ref. Symbol	Part No.	IFR. Stock No.	Description	Qty. Per Assy.
Q1107, 1116, 1119, 1121, & Q1119*	2N3251		. . . Transistor, SOLID STATE/ Equiv.	4
	* Q1119 Effectivity on NAV-750/A S/N 525 & on.			
Q1112 thru 1115 & 1118	2N3646		. . . Transistor, NATIONAL/Equiv.	5
Q1120 & 1122	2N4223		. . . Transistor, NATIONAL/Equiv.	2
Q1123	2N5462		. . . Transistor, MOTOROLA/Equiv.	1
	7717-46N		. . . Transistor Mtg. Pad, THERMALLOY/ Equiv.	2
R-1155 & 1181	62-1-1-202		. . . Trim Pot. SPECTROL/Equiv.	2
3-16-0297		1-16-0305	. 12.5 kHz Phase-Lock Assy. (Effective All NAV-750B units S/N 2001 & on)	1
		1-16-0296	. . 12.5 kHz Phase-Lock PC Bd. Assy.	1
		3-16-0291	. . . 12.5 kHz Phase-Lock PC Bd.	1
X1102	MC16666		. . . Logic, MOTOROLA/Equiv.	1
X1103	MC1692L		. . . Logic, MOTOROLA/Equiv.	1
X1104 & 1113	SN72741L		. . . Logic, T.I./ Equiv.	2

Dwg. and Ref. Symbol	Part No.	IFR. Stock No.	Description	Qty. Per Assy.
X1105, 1107, 1114, & 1123	SN7400N		. . . Logic, T.I./ Equiv.	4
X1106, 1108, 1109, 1110, 1115, & 1116	SN7490N		. . . Logic, T.I./ Equiv.	6
X1111, 1112, 1120, & 1126	SN74190N		. . . Logic, T.I./ Equiv.	4
X1117	SN74121N		. . . Logic, T.I./ Equiv.	1
X1118	SN7420N		. . . Logic, T.I./ Equiv.	1
X1119	SN7402N		. . . Logic, T.I./ Equiv.	1
X1121	MC12013L		. . . Logic, MOTOROLA/Equiv.	1
X1122	MC10131L		. . . Logic, MOTOROLA/Equiv.	1
X1124	SN7473N		. . . Logic, T.I./ Equiv.	1
X1125	SN74191N		. . . Logic, T.I./ Equiv.	1
X1127	CD-4066		. . . Quad. Switch, RCA/Equiv.	1
X1128 & 1129	CA3130		. . . IC, RCA/Equiv.	2
Y1101		3-76-0063-24	. . . Crystal 10 MHz K.W./Equiv.	1
CR1101, 1108, & 1109	5082-2800		. . . Diode, HP/Equiv.	3

Dwg. and Ref. Symbol	Part No.	IFR Stock No.	Description	Qty. Per Assy.
CR1102, & 1105 thru 1107	1N4148		. . . Diode, SOLID STATE/Equiv.	4
CR1110	1N823		. . . Zener, MOTOROLA/Equiv.	1
CR1111	1N5231B		. . . Diode, DICKSON, Equiv.	1
Q1101, 1102, 1103, 1105, 1106, 1109, & 1117	66382		. . . Transistor, RCA/Equiv.	7
Q1104 & 1108	2N2222		. . . Transistor, SOLID STATE/ Equiv.	2
Q1107 & 1119*	2N3251		. . . Transistor, SOLID STATE/ Equiv.	2
* Delta F quieting ckt. with Q1119 in NAV-750B units S/N 2044 & on.				
Q1112, 1113, 1114, & 1118	2N3646		. . . Transistor, NATIONAL/Equiv.	4
	7717-46N		. . . Transistor Mtg. Pad, THERMALLOY/ Equiv.	1
R1155	62-1-1-202		. . . Trim Pot. SPECTROL/Equiv.	1
R1181	62-1-1-103		. . . Trim Pot. SPECTROL/Equiv.	1

Dwg. and Ref. Symbol	Part No.	IFR. Stock No.	Description	Qty. Per Assy.
3-16-0060		1-16-0056	. Modulation Amplifier Effective: NAV-750 prior to S/N 408 and NAV-750A prior to S/N 481.	1
		1-16-0262	. . Mod. Amp. PC Bd. Assy.	1
X1201	SN72709L		. . . Logic, T.I./ Equiv.	1
X1202	SN72741L		. . . Logic, T.I./ Equiv.	1
X1203	SN72558P		. . . Logic, T.I./ Equiv	1
Q1201	66382		. . . Transistor, RCA/Equiv.	1
Q1202, 1203, & 1205 thru 1207	2N5109		. . . Transistor, MOTOROLA/ONLY	5
Q1204	MRF-911 or BRF-90		. . . Transistor, MOTOROLA/Equiv.	1
Q1208, 1209, 1211, & 1212	2N5366		. . . Transistor, SOLID STATE/ Equiv.	4
Q1210	2N2405		. . . Transistor, RCA/Equiv.	1
Q1213, 1214, & 1215	2N3415		. . . Transistor, SOLID STATE/ Equiv.	3
CR1201 & 1205	5082-2800		. . . Diode, HP/Equiv.	2

Dwg. and Ref. Symbol	Part No.	IFR Stock No.	Description	Qty. Per Assy.
CR1202 & 1204	PSO-83B		. . . Diode, PARAMETRICS/ Equiv.	2
CR1203	1N5234		. . . Zener, MOTOROLA/Equiv.	1
CR1206, 1207, & 1208	1N4148		. . . Diode, SOLID STATE/Equiv.	3
R1213 & 1227	62-1-1-201		. . . Trim Pot. SPECTROL/Equiv.	2
4-16-0337		1-16-0336	. Modulator Amplifier Assy. Effective NAV-750 S/N 408 and on NAV-750A S/N 381 and on.	1
		1-16-0335	. . Mod. Amp. PC Bd. Assy.	1
		2-16-0273	. . . Mod. Amp. PC Bd.	1
X1 & X2	5558		. . . IC, MOTOROLA/ Equiv.	2
X3	CA3100T		. . . IC, RCA/Equiv.	1
X4	SN72741		. . . IC, T.I. only	1
X5	MC7712CP		. . . Voltage Reg., MOTOROLA	1
Q1, 2 3, 4, & 7	BFR90		. . . Transistor, MOTOROLA/Equiv.	5
Q5	HP35853E		. . . Transistor, HP/Equiv.	1
Q6, 8 & 11	2N3251		. . . Transistor, MOTOROLA/Equiv.	3
Q9, 10 & 12	2N2222		. . . Transistor, MOTOROLA/Equiv.	3

Dwg. and Ref. Symbol	Part No.	IFR. Stock No.	Description	Qty. Per Assy.
CR1, 5 thru 10, 16, 18	MA47047		. . . Diode, MICROWAVE ASSOC./Equiv.	9
CR11 thru 15	PSO-83B		. . . Diode, PARA-METRICS/Equiv.	5
CR17 & 19	MS-324		. . . Diode, SOLITRON/ Equiv.	2
CR20 & 24	1N4148		. . . Diode, DICKSON/ Equiv.	2
CR22	5082-2800		. . . Diode, HP/Equiv.	1
CR23	1N5231B		. . . Zener, INTER-NATIONAL REC-TIFIER/Equiv.	1
R-32	62-1-1-201		. . . Trim Pot. SPECTROL/Equiv.	1
R-51	62-1-1-102		. . . Trim Pot. SPECTROL/Equiv.	1
4-16-0272		1-16-0275	. Modulator Amplifier Assy. (Effective all NAV-750B units S/N 2001 and on)	1
		1-16-0274	. . Mod. Amp. PC Bd. Assy.	1
		2-16-0273	. . . Mod. Amp. PC Bd.	1
X1 & 2	5558		. . . IC, MOTOROLA/ Equiv.	2
X3	CA3100T		. . . IC, RCA/Equiv.	1
X4	SN72741		. . . IC, T.I. ONLY	1
X5	MC7712CP		. . . Voltage Reg. MOTOROLA/Equiv.	1

Dwg. and Ref. Symbol	Part No.	IFR. Stock No.	Description	Qty. Per Assy.
Q1, 2 3, 4, & 7	BFR 90		. . . Transistor, MOTOROLA/Equiv.	5
Q5	HP35853E		. . . Transistor, HP/Equiv.	1
Q6, 8 & 11	2N3251		. . . Transistor, MOTOROLA/Equiv.	3
Q9, 10, & 12	2N2222		. . . Transistor, MOTOROLA/Equiv.	3
CR1 thru 10, & 16, 18	MA47047		. . . Diode, MICRO-WAVE ASSOC./ Equiv.	12
CR11 thru 15 & 25	PSO-83B		. . . Diode, PARA-METRICS/Equiv.	6
CR17 & 19	MS324		. . . Diode, SOLTRON/ Equiv.	2
CR20, 21 & 24	1N4148		. . . Diode, DICKSON/ Equiv.	3
CR22	5082-2800		. . . Diode, HP/Equiv.	1
CR23	1N5231B		. . . Zener, INTER-NATIONAL RECT-IFIER/Equiv.	1
R-32	62-1-1-201		. . . Trim Pot. SPECTROL/Equiv.	1
R-51	62-1-1-102		. . . Trim Pot. SPECTROL/Equiv.	1
3-16-0022		1-16-0359	. Oscillator Assembly (Effective All NAV-750 units (Standard) S/N 101 and on)	1
		1-16-0046	. . Oscillator PC Bd. Assy.	1

Dwg. and Ref. Symbol	Part No.	IFR. Stock No.	Description	Qty. Per Assy.
		3-16-0047	. . . Oscillator PC Bd.	1
X1301	UA741CL		. . . IC, T.I./Equiv.	1
Q1301, 1303, 1311, & 1312	2N3251		. . . Transistor, SOLID STATE/ Equiv.	4
Q1302, 1304, 1307, & 1310	2N2222		. . . Transistor, MOTOROLA/Equiv.	4
Q1305, 1306, 1308, 1309, & 1313 thru 1316	66382		. . . Transistor, RCA/Equiv.	8
CR1301	1N823		. . . Zener, MOTOROLA/Equiv.	1
CR1302, 1303, 1306, & 1307	1N4148		. . . Diode, SOLID STATE/Equiv.	4
CR1304 & 1309	PSO-83B		. . . Diode, PARAMETRICS/ Equiv.	2
CR1305, & 1308	PCO-600D		. . . Diode, PARAMETRICS/ Equiv.	2
R1303	62-1-1-202		. . . Trim Pot. SPECTROL/Equiv.	1
R1312	62-1-1-103		. . . Trim Pot. SPECTROL/Equiv.	1

Dwg. and Ref. Symbol	Part No.	IFR Stock No.	Description	Qty. Per Assy.
		1-16-0208	. . Osc. Accessory Bd. Assy. (12.5 & 25 kHz traps)	1
		1-16-0188	. . . Osc. Access. PC Bd.	1
C1701 & 1702	4615		. . . Trimmer Cap., ELMENCO/Equiv.	2
3-16-0172A		1-16-0187	. Oscillator Assy. 8 step (Effective All NAV-750A units S/N 101 thru 380)	1
		1-16-0184	. . Oscillator PC Bd. Assy.	1
		3-16-0172	. . . Oscillator PC Bd.	1
X1601	SN72741L		. . . IC, T.I./Equiv.	1
X1602	SN74191N		. . . IC, T.I./Equiv.	1
X1603	SN74145		. . . Logic, T.I./ Equiv.	1
X1604	SN72558P		. . . IC, T.I./Equiv.	1
S1601	435166-2		. . . Switch, AMP/ Equiv.	1
Q1601	2N2905		. . . Transistor, FAIRCHILD/Equiv.	1
Q1602, 1610, & 1643	2N3415		. . . Transistor, SOLID STATE/ Equiv.	3
Q1603, 1604, 1605, 1609, 1611, 1614, 1617, 1620, 1623, 1626, 1629, 1632, & 1638	2N5366		. . . Transistor, SOLID STATE/ Equiv.	13

Dwg. and Ref. Symbol	Part No.	IFR. Stock No.	Description	Qty. Per Assy.
Q1606, 1607, 1613, 1616, 1619, 1622, 1625, 1628, 1631, 1634, 1640, 1641, & 1642	2N5179		. . . Transistor, RCA/Equiv.	13
Q1612, 1615, 1618, 1621, 1624, 1627, 1630, 1633, & 1639	2N4416		. . . Transistor, MOTOROLA/Equiv.	9
Q1635	2N2646		. . . Transistor, GE/Equiv.	1
Q1636, & 1637	2N3646		. . . Transistor, NATIONAL/Equiv.	2
	7717-219		. . . Pad, Mtg. THERMALLOY/Equiv.	5
CR1601	1N823		. . . Zener, MOTOROLA/ Equiv.	1
CR1603, 1606, 1609, 1611, 1612, 1618, 1621, & 1624	PCO-605D		. . . Diode, PARAMETRICS/ Equiv.	8
CR1604, 1607, 1610, 1613, 1616, 1619, 1622, & 1625	5082-2800		. . . Diode, HP/Equiv.	8
CR1605, 1608, 1611, 1614, 1617, 1620, 1623, 1626, & 1630	5082-4860		. . . LED, HP/Equiv.	9

Dwg. and Ref. Symbol	Part No.	IFR. Stock No.	Description	Qty. Per Assy.
CR1607, 1627, 1628, & 1629	1N4148		. . . Diode, SOLID STATE/Equiv.	4
CR1631	PCO-600D		. . . Diode, PARAMETRICS/ Equiv.	1
R1606 & 1616	62-1-1-202		. . . Trim Pot. SPECTROL/Equiv.	2
R1625	62-1-1-103		. . . Trim Pot. SPECTROL/Equiv.	1
R1684	62-1-1-502		. . . Trim Pot. SPECTROL/Equiv.	1
C1610 & 1613	4615		. . . Trimmer Cap, JFD/Equiv.	2
C1661	NVC9GW		. . . Trimmer Cap, JFD/Equiv.	1
4-16-0334		1-16-0360	. Oscillator Assy. (Effective All NAV-750A units S/N 381 and on)	1
		1-16-0332	. . Oscillator PC Bd Assy.	1
		2-16-0286	. . . Oscillator PC Bd.	1
X1	SN74LS00N		. . . Logic, T.I./ Equiv.	1
X2	SN72LS11M		. . . Logic, T.I./ Equiv.	1
Q1	2N3251		. . . Transistor, NATIONAL/Equiv.	1
Q2, 12, 13, & 14	2N2222		. . . Transistor, MOTOROLA/Equiv.	1

Dwg. and Ref. Symbol	Part No.	IFR. Stock No.	Description	Qty. Per Assy.
Q3	2N2405		. . . Transistor, MOTOROLA/Equiv.	1
Q5, 6 10, & 15 thru 18	66382		. . . Transistor, RCA/Equiv.	7
Q7* & 8	3N201		. . . Transistor, RCA/Equiv.	2
* On NAV-750A S/N 500 & on and NAV-750B S/N 2057 and on Q7 & Q8 are 3N200 and CR3 & CR4 are MA45106.				
Q9	2N4416		. . . Transistor, NATIONAL/Equiv.	1
CR2	5082-2800		. . . Diode, HP/Equiv.	1
CR3 & 4	PCO-600D		. . . Diode, PARAMETRICS/ Equiv.	2
CR5	MA45102		. . . Diode, MICROWAVE ASSOC. Equiv.	1
CR6	1N5231		. . . Zener, DICKSON/ Equiv.	1
C-30	NVC-9GW		. . . Trimmer Cap., JFD/Equiv.	1
R2	62-1-1-103		. . . Trim Pot. SPECTROL/Equiv.	1
		1-16-0208	. . Osc. Accessory Bd. Assy. (12.5 & 25 kHz traps)	1
		1-16-0188	. . . Osc. Accessory PC Bd.	1
C-3 & 33	4615		. . . Trimmer Cap, ELMENCO/Equiv.	2

Dwg. and Ref. Symbol	Part No.	IFR Stock No.	Description	Qty. Per Assy.
4-16-0285		1-16-0361	. Oscillator Assy. (Effective All NAV-750B units S/N 2001 & on)	1
		1-16-0287	. . Oscillator PC Bd. Assy.	1
		1-16-0286	. . . Oscillator PC Bd.	1
X1	SN74LS00		. . . Logic, T.I./ Equiv.	1
X2	SN74LS11		. . . Logic, T.I./ Equiv.	1
Q1	2N3251		. . . Transistor, NATIONAL/Equiv.	1
Q2, 11 thru 14	2N2222		. . . Transistor, MOTOROLA/Equiv.	5
Q3	2N2405		. . . Transistor, MOTOROLA/Equiv.	1
Q4	40673		. . . Transistor, RCA/Equiv.	1
Q5, 6 10, 15 thru 18	66382		. . . Transistor, RCA/Equiv.	7
Q7 & 8	3N201* * (See note on pg 9-40)		. . . Transistor, RCA/Equiv.	2
Q9	2N4416		. . . Transistor, NATIONAL/Equiv.	1
CR1	PCO-602D		. . . Diode, PARAMETRICS/ Equiv.	1
CR2	5082-2800		. . . Diode, HP/Equiv.	1
CR3 & 4	PCO-600D* * (See note on pg 9-40)		. . . Diode, PARAMETRICS/ Equiv.	2

Dwg. and Ref. Symbol	Part No.	IFR. Stock No.	Description	Qty. Per Assy.
CR5	MA45102		. . . Diode, MICROWAVE ASSOC/Equiv.	1
CR6	1N5231		. . . Zener, DICKSON/Equiv.	1
R2	62-1-1-103		. . . Trim Pot. SPECTROL/Equiv.	1
C30	NVC-9GW		. . . Trimmer Cap. JFD/Equiv.	1
		1-16-0208	. . Osc. Accessory Bd. Assy. (12.5 & 25 kHz traps)	1
		1-16-0188	. . . Osc. Accessory PC Bd.	1
C3 & 33	4615		. . . Trimmer Cap, ELMENCO/Equiv.	2
2-16-0143		1-16-0161	. Dual Buffer Amp Assy. (Effective All NAV-750 units S/N 101 thru 402 and NAV-750A units thru S/N 380)	1
		1-16-0164	. . Buffer Amp PC Board Assy.	2
		1-16-0121	. . . Buffer Amp PC Bd.	1
Q1501, 1502, & 1503	2N5179		. . . Transistor, RCA/Equiv.	3
2-16-0310		1-16-0312	. Dual Buffer Amp. Assy. (Effective NAV-750 units S/N 403 & on, NAV-750A S/N 381 & on, and NAV-750B S/N 2001 & on)	1
		1-16-0310	. . Buffer Amp. PC Board Assy.	2

Dwg. and Ref. Symbol	Part No.	IFR Stock No.	Description	Qty. Per Assy.
		1-16-0121	. . . Buffer Amp PC Bd.	1
Q1, 2, & 3	66382		. . . Transistor, RCA/Equiv.	3
2-16-0143		1-16-0244	. Single Buffer Amp. Assy. (Effective All NAV-750 units S/N 101 thru 402 and NAV-750A units thru S/N 380)	1
		1-16-0164	. . . Buffer Amp. PC Board Assy.	1
		1-16-0121	. . . Buffer Amp. PC Bd.	1
Q1501, 1502, & 1503	2N5179		. . . Transistor, RCA/Equiv.	3
2-16-0310		1-16-0314	. Single Buffer Amp. Assy. (Effective NAV-750 S/N 403 & on, NAV-750A S/N 381 & on, and NAV-750B S/N 2001 & on)	1
		1-16-0310	. . Buffer Amp. PC Board Assy.	1
		1-16-0294	. . . Buffer Amp. PC Bd.	
Q1, 2 & 3	66382		. . . Transistor, RCA/Equiv.	3

9.6 Wire Harness Assy.

Dwg. and Ref. Symbol	Part No.	IFR. Stock No.	Description	Qty. Per Assy.
4-16-0141 & 4-16-0327		1-16-0114	Wire Harness Assy. (Effective for all model NAV-750 Test Sets)	REF.
J-1 thru J-5 & J-7	50-44A-30		. Card Edge Connector CINCH-JONES	6
J-6	910100-31		. Card Edge Connector F.T.I.	1
J-11	205207-1		. Receptacle, 25 pin AMP	1
J-12, 13, & 14	205203-1		. Receptacle, 9 pin AMP	3
(to S-28 A thru E)	5010A-20		. Connector, CINCH-JONES, FLS to S-28, FREQUENCY switch.	5
4-16-0141 & 4-16-0327		1-16-0155	. Channel Enunicator Assy.	1
SPK-1	AD3370		. . Speaker, AMPEREX/Equiv.	1
R-12	RV6LAYS A101A		. . Potentiometer, CLAROSTAT/Equiv.	1

9.7 Semi-Rigid Coax Assy.

Dwg. and Ref. Symbol	Part No.	IFR. Stock No.	Description	Qty. Per Assy.
3-16-0163		1-16-0173	Semi-Rigid Coax. Assy. (Effective all NAV-750 units S/N 101 thru 402 and NAV-750A units thru S/N 380)	REF
		2-16-0133	. Coax. Assy. (From J121 to J1)	1
		3-16-0134-1	. Coax. Assy. (From J124 to J101)	1
		2-16-0135	. Coax. Assy. (From J2 to J3)	1
		3-16-0136	. Coax. Assy. (From J131 to J151)	1
		2-16-0137	. Coax. Assy. (From J111 to J154)	1
		2-16-0138	. Coax. Assy. (From J112 to J132)	1
		2-16-0145-1	. Coax. Assy. (From J113 to J141)	1

NOTE: Each Coax. Assembly consists of AMERICON P/N 2001-7941 coax. connectors, or equivalent, and TIMES WIRE CO. P/N CL50-141 semi-rigid coax. cable, or equivalent.

9.8 Semi-Rigid Coax Assy.

Dwg. and Ref. Symbol	Part No.	IFR. Stock No.	Description	Qty. Per Assy.
3-16-0163		1-16-0173	Semi-Rigid Coax. Assemblies (Effective all NAV-750 units S/N 403 and on, NAV-750A S/N 381 and on, and NAV-750B units S/N 2001 and on)	REF.
		2-16-0133	. Coax. Assy. (From J121 to J-1)	1
		3-16-0363	. Coax. Assy. (From J124 to J101)	1
		2-16-0135	. Coax. Assy. (From J2 to J3)	1
		3-16-0364	. Coax. Assy. (From J131 to J151)	1
		2-16-0365	. Coax. Assy. (From J111 to J154)	1
		2-16-0362-1	. Coax. Assy. (From J112 to J132)	1
		2-16-0362-2	. Coax. Assy. (Use in place of -1 assy. with tune line filter)	1
		2-16-0145-2	. Coax Assy. (From J113 to J141)	1

Dwg. and Ref. Symbol	Part No.	IFR. Stock No.	Description	Qty. Per Assy.
		1-16-0250	. Tune Line Filter Assy. (used only as needed)	1

NOTE: Each Coax. Assembly consists of AMERICON P/N 2001-7941 Coax. connectors, or equivalent, and TIMES WIRE CO. P/N CL50-141 semi-rigid coax. cable, or equivalent.

17460-S		Line Cable, BELDEN/ Eqiuv.	1
	1-17-0070-2	Accessory cable (37 position) Connector kit.	
205210-1	.	. Connector, Male 37 Pos. AMP/Equiv.	1
205089-1		. Solder pin, AMP/ Equiv.	37
17-313-01		. Strain Relief, AMPHENOL/Equiv.	1
205980-1		. Screw & Retainer Kit, AMP/Equiv.	1

9.9 Covers & Misc. Hardware

Dwg. and Ref. Symbol	Part No.	IFR. Stock No.	Description	Qty. Per Assy.
			Covers & Misc. Hardware	REF.
		4-16-0275	Side Frame	2
		3-76-0065	Top Cover	1
		3-76-0066	Bottom Cover	1
		3-76-0121	Side Cover	2
		1-76-0070	Trim Strip	2
		2-76-0067	Handle	2
		2-76-0069	Handle Mounting Plate	2
		2-76-0302	Foot Assy.	5

SECTION IX

TABLE 9-1

NAV-750 Series Bench Test Set Spare Parts Recommendations for One Year.

TRANSISTORS:

HP3583E	1 each	RCA40673	1 each
LAS1505	1 each	2N2405	2 each
PK10	1 each	2N2905	2 each
66382	2 each	2N5109	2 each
UC734	3 each	2N4416	1 each

DIODES:

BFR 90	1 each	PC0600D	1 each
IN823B	1 each	MA45102	1 each
PSO82	1 each	MA7047	1 each

OP/AMPS AND LOGIC:

SN7400N	3 each	SN74LS11N	1 each
SN7490N	3 each	N5558P	2 each
DD700N	2 each	LM709	2 each
SN72741L	2 each	SN7405N	2 each
SN74LS00N	1 each	M61458	1 each
		M67712CP	1 each

MISCELLANEOUS:

Sperry Readout	SP352	2 each
Switch IFR P/N	1-76-0083	1 each
Phase Lock Lamp	(Blue) P/N CF-S-1762	1 each
Indicator Lamp	(Green) P/N CF-S-1762	2 each
Attenuator IFR/P/N	3-76-0094	1 each

DATE	REV	CHANGE	APP'D

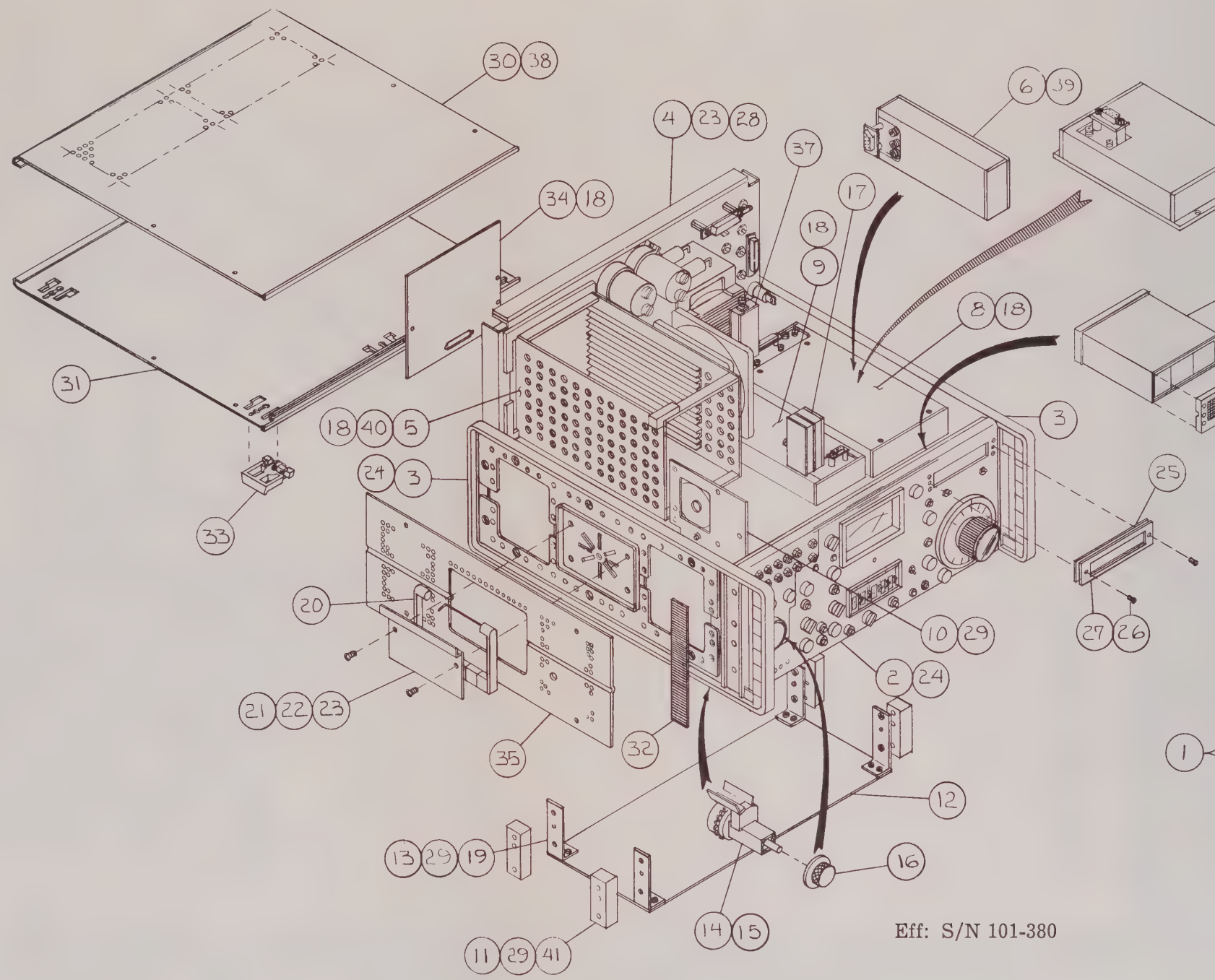

Eff: S/N 101-380

NOTE:

1 ▷ 8 STEP OSC. USED IN NAV-750A ONLY.

ITEM	REQ'D	PART NO.	DESCRIPTION
41	8	6-32X3/4	PHIL. FLAT HD. SCW.
40	4	4-40X3/8	PHIL. BIND HD SCW.
39	3	8-32X1/4	PHIL. FLAT HD. SCW.
38	16	440X1/4	PHIL. FLAT HD SCW.
37	1	1-16-0125	BUFFER AMP ASS'Y.
36	1	H6-0187	8 STEP OSC. ASS'Y.
35	2	3-760821	SIDE COVER.
34	1	1-16-0087	CARD CAGE COVER
33	5	276-0068	FOOT ASS'Y.
32	2	1-760070	TRIM STRIP
31	1	3-76-0066	BOTTOM COVER
30	1	376-0065	TOP COVER
29	17	#6-32X1/4	PHIL. FLAT HD MACH. SCW.
28	4	#8-32X1/4	PHIL. BIND HD. MACH SCW.
27	1	1-16-0083	BEZEL COUNTER
26	2	#2-56X3/16	BLACK ANODIZED PHIL. SCW. BIND HD.
25	1	1-16-0207	LENS
24	8	#8-32X3/16	PHIL. SCW - FLAT HD.
23	8	#8	INT. TOOTH L.W.
22	4	#8-32X3/8	PHIL. FLAT. HD. MACH. SCW.
21	2	2-76-0069	HANDLE MTG. PLATE
20	2	3-76-0067	HANDLE SIDE COVER
19	8	#6	INT. TOOTH L. W.
18	12	#6-32X5/16	PHIL. BIND HD. MACH. SCW.
17	1	1-16-0161	DUAL BUFFER AMP ASS'Y.
16	1	2-00-0130	1" DIA. KNOB ASS'Y.
15	8	#4-40X5/16	PHIL. SCW. - FLAT HEAD
14	1	2-16-0045	BRG. SELECT ASS'Y.
13	4	2-14-02432-1	MTG. FOOT
12	1	3-16-0057	FLOOR PLATE
11	4	2-14-02432	MOUNTING SPACER
10	1	2-16-0115	CHANEL ENUNC. ASS'Y.
9	1	3-16-0056	MOD./AMP. MECH. ASS'Y.
8	1	3-16-0054	PHASE LOCK MECH. ASS'Y.
7	1	3-16-00134	DIGITAL READOUT & DISPLAY ASS'Y
6	1	2-16-0055	OSC. MECH. ASS'Y.
5	1	3-16-00136	CARD CAGE ASS'Y.
4	1	3-16-0106	REAR PANEL ASS'Y (INSIDE)
3	2	3-76-0062	SIDE FRAME PANEL
2	1	3-16-0105	FRONT PANEL ASS'Y.
1	1	3-16-0052	NAV-750 COMPOSITE

LIST OF MATERIALS

NEXT ASS'Y	QTY	MODEL
	1	NAV-750

APPLICATION

TOLERANCES
UNLESS OTHERWISE SPECIFIED
ALL DIMENSIONS APPLY AFTER FINISH
DECIMALS: .xx = ± .010 .xxx = ± .005
ANGLES ± 1/2°
FRACTIONS ± 1/64
SURFACE ROUGHNESS 125 ✓
REMOVE ALL BURRS

	DATE
DRAWN	1-2-75
CHECKED	2-17-75
APPROVED	2 18 75

MATERIAL NOTED
TREATMENT
FINISH

INSTRUMENT FLIGHT RESEARCH CORPORATION
WICHITA, KANSAS.

TITLE NAV-750 ASSEMBLY (COMPOSITE)

SIZE — | PART NUMBER 3-16-0052 | REV

SCALE NONE | WEIGHT — | SHEET 1 OF 1

Fig. 10-1 (Sheet 1 of 2)

DATE	REV	CHANGE	APP'D
[illegible]	A	INCORP ECN # 1931 JNV	[illegible]
9-20-77	B	INC ECN 2357 TT	[illegible]
10/4/77	C	INCORP. ECN # 2410 LC	[illegible]
[illegible]	D	INCORP ECN # 2775 LC	[illegible]

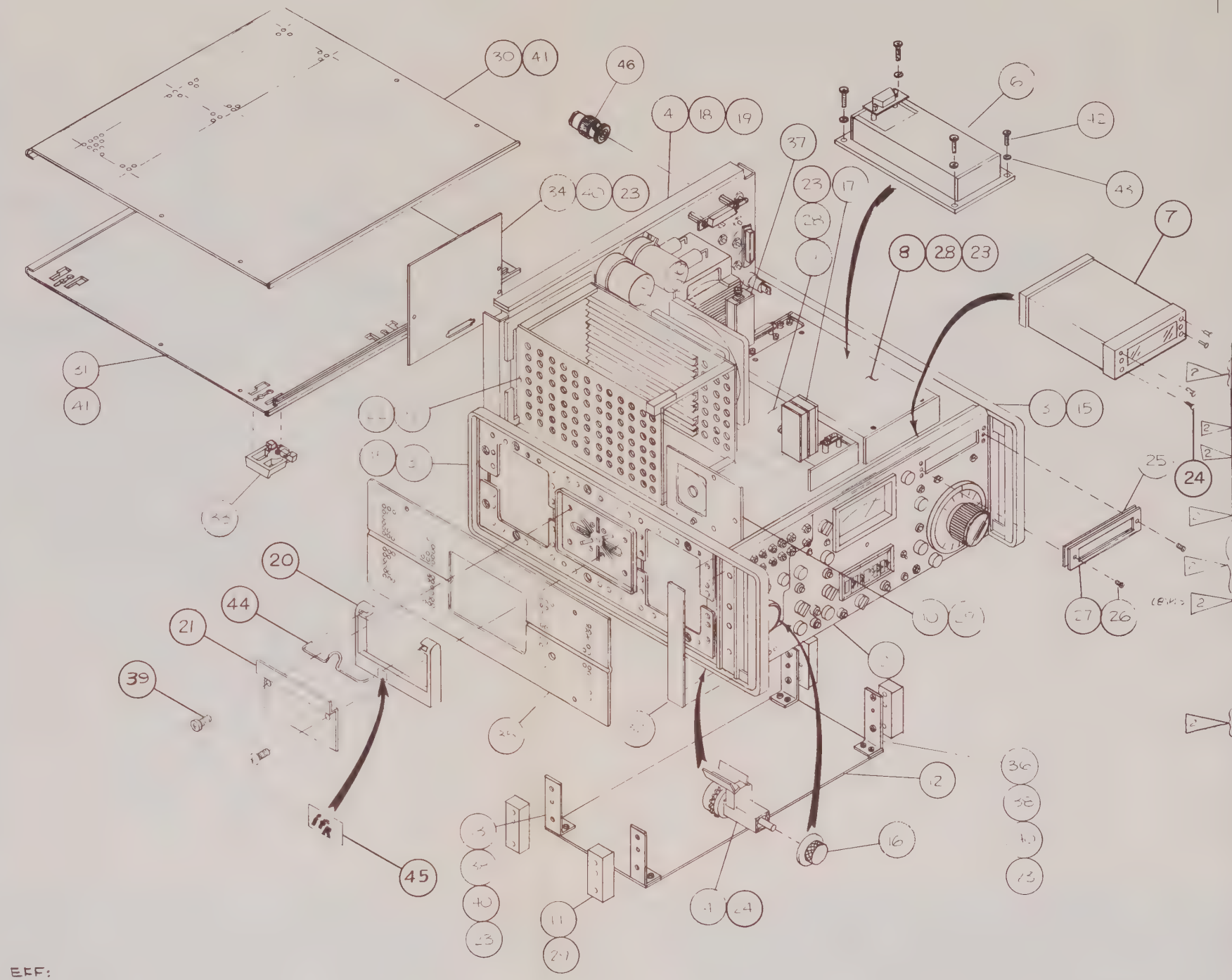

NOTES:
1. THIS ASSY EFF: S/N 381 & ON
2. ORDER ONLY AS 1-00-0194

ITEM	REQ'D	PART NO.	DESCRIPTION
46	1	T9-1-14-0050	50Ω TYPE 'N' LOAD
45	2	75-0040	IFR DECAL
44	2	1-76-0291	HANDLE RETURN SPRING
43	4	#4	INT TOOTH LOCKWASHER
42	4	#4 [illegible]x1/4	PBHMS
41	[illegible]	#6 [illegible]x1/2	PFHMS
40	11	#6 [illegible]	PBHMS
39	4	#6 [illegible]x3/8	PBHMS
38	8	#6 32x3/4	PFHMS
37	1	16-0244	BUFFER AMP ASS'Y.
36	1	14-0243-4	MOUNTING FOOT
35	2	76-0121	SIDE COVER
34	1	16-0087	CARD CAGE COVER
33	5	76-0068	FOOT ASSEMBLY
32	2	76-0070	TRIM STRIP
31	1	76-0066	BOTTOM COVER
30	1	76-0065	TOP COVER
29	14	#6 [illegible]x1/4	PFHMS
28	8	#6 [illegible]	PBHMS
27	1	16-0081	BEZEL
26	2	#6 [illegible]x3/8	PBHMS (BLACK ANODIZED)
25	1	[illegible]-0207	LENS
24	8	#4 [illegible]	PFHMS
23	19	#6	INT. TOOTH LOCKWASHER
22	4	#4 [illegible]	PFHMS
21	2	[illegible]-0069	HANDLE MTG. PLATE
20	2	76-0067	HANDLE
19	4	#8	INT. TOOTH LOCKWASHER
18	4	#8 32x1/4	PBHMS
17	1	16-0312	DUAL BUFFER AMP ASS'Y.
16	1	00-0-30	1" DIA. KNOB ASS'Y.
15	[illegible]	#8 32x[illegible]	PFHMS
14	1	16-0045	BRG. SELECT ASS'Y.
13	3	14-0243-1	MTG. FOOT
12	1	16-0323	FLOOR
11	4	14-0243-2	MOUNTING SPACER
10	1	16-0115	HANNEL ENUNCIATOR ASS'Y
9	1	16-0336	MOD. AMP ASS'Y
8	1	16-0203	12.5 KHz PHASE LOCK ASS'Y
7	1	16-0034	DIGITAL READOUT & DISPLAY ASS'Y
6	1	16-0354	OSCILLATOR ASS'Y
5	1	16-0036	CARD CAGE ASS'Y.
4	1	16-0051	REAR FAN ASS'Y
3	2	16-0275	SIDE FRAME
2	1	16-0029	FRONT PANEL ASS'Y.
1	1	[illegible]-0352	NAV-750

LIST OF MATERIALS

NEXT ASS'Y	QTY	MODEL
16-0052	1	NAV-750

APPLICATION

TOLERANCES
UNLESS OTHERWISE SPECIFIED
ALL DIMENSIONS APPLY AFTER FINISH
DECIMALS: .xx = ± .010 .xxx = ± .005
ANGLES: ± 1/2°
FRACTIONS: ± 1/64
SURFACE ROUGHNESS 125
REMOVE ALL BURRS

DRAWN [illegible] DATE 1-[illegible]-75
CHECKED [illegible] DATE 2-17-75
APPROVED [illegible] DATE 2-18-75

MATERIAL NOTED
TREATMENT
FINISH

INSTRUMENT FLIGHT RESEARCH CORPORATION
WICHITA, KANSAS.

TITLE
NAV 150 MODULES
AND COMPONENT PARTS
NAV-750

SIZE C | PART NUMBER 3-16-0052 | REV 5
SCALE NONE | WEIGHT | SHEET 1 OF 1

10-2 Fig. 10-1 (Sheet 2 of 2)

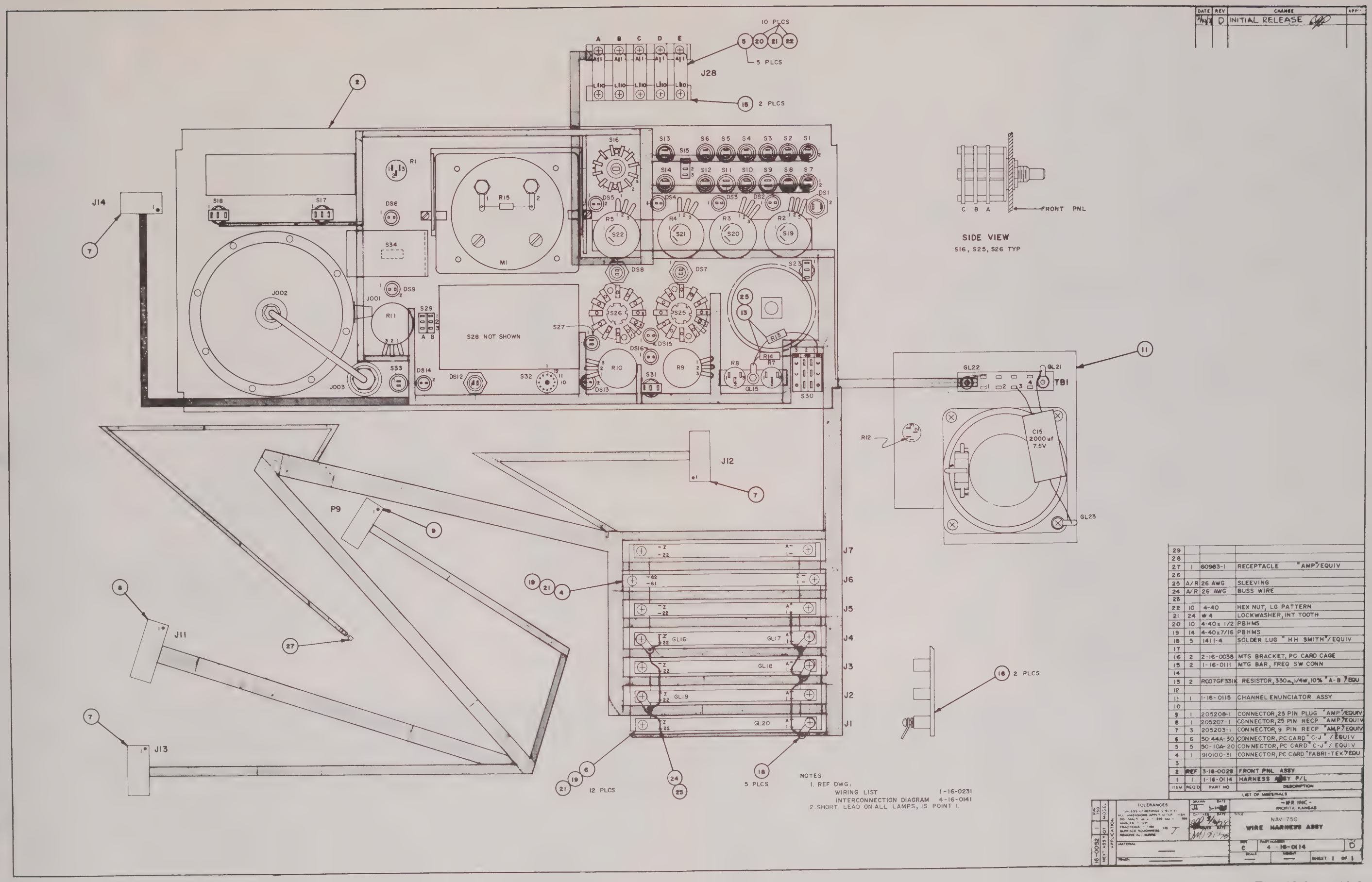

ITEM	REQ'D	PART NO	DESCRIPTION
29			
28			
27	1	60983-1	RECEPTACLE "AMP"/EQUIV
26			
25	A/R	26 AWG	SLEEVING
24	A/R	26 AWG	BUSS WIRE
23			
22	10	4-40	HEX NUT, LG PATTERN
21	24	#4	LOCKWASHER, INT TOOTH
20	10	4-40 x 1/2	PBHMS
19	14	4-40 x 7/16	PBHMS
18	5	1411-4	SOLDER LUG "HH SMITH"/EQUIV
17			
16	2	2-16-0038	MTG BRACKET, PC CARD CAGE
15	2	1-16-0111	MTG BAR, FREQ SW CONN
14			
13	2	RC07GF331K	RESISTOR, 330Ω, 1/4W, 10% "A-B"/EQU
12			
11	1	1-16-0115	CHANNEL ENUNCIATOR ASSY
10			
9	1	205208-1	CONNECTOR, 25 PIN PLUG "AMP"/EQUIV
8	1	205207-1	CONNECTOR, 25 PIN RECP "AMP"/EQUIV
7	3	205203-1	CONNECTOR, 9 PIN RECP "AMP"/EQUIV
6	6	50-44A-30	CONNECTOR, PC CARD "C-J"/EQUIV
5	5	50-10A-20	CONNECTOR, PC CARD "C-J"/EQUIV
4	1	910100-31	CONNECTOR, PC CARD "FABRI-TEK"/EQU
3			
2	REF	3-16-0029	FRONT PNL ASSY
1	1	1-16-0114	HARNESS ASSY P/L

LIST OF MATERIALS

Fig. 10-2

DATE	REV	CHANGE	APP'D
		INITIAL RELEASE	

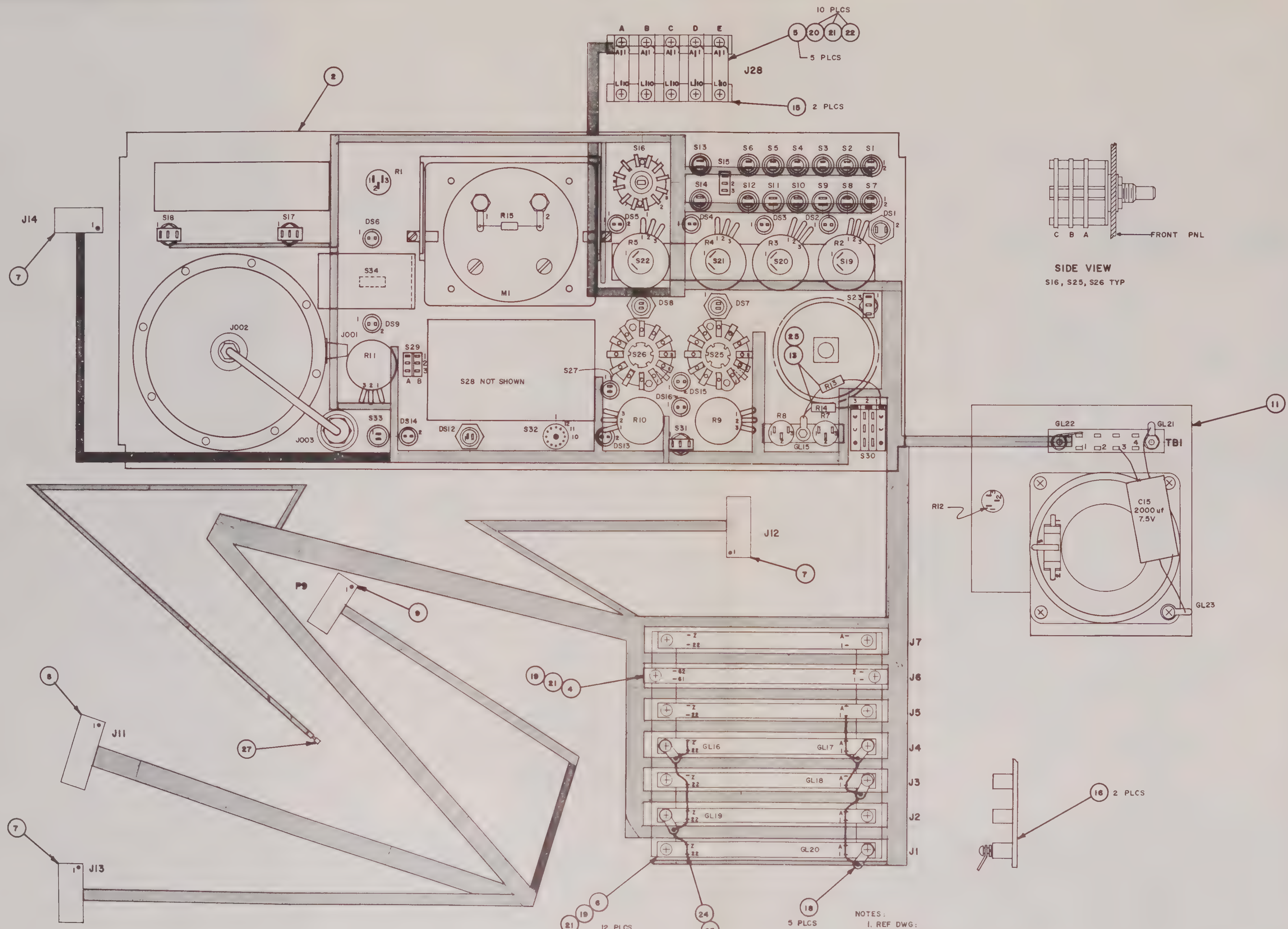

NOTES:
1. REF DWG:
WIRING LIST 1-16-0231
INTERCONNECTION DIAGRAM 4-16-0141
2. SHORT LEAD LEAD ON ALL LAMPS, IS POINT 1.

ITEM	REQ'D	PART NO	DESCRIPTION
29			
28			
27	1	60983-1	RECEPTACLE "AMP"/EQUIV
26			
25	A/R	26 AWG	SLEEVING
24	A/R	26 AWG	BUSS WIRE
23			
22	10	4-40	HEX NUT, LG PATTERN
21	24	#4	LOCKWASHER, INT TOOTH
20	10	4-40x 1/2	PBHMS
19	14	4-40x7/16	PBHMS
18	5	1411-4	SOLDER LUG "H H SMITH"/EQUIV
17			
16	2	2-16-0038	MTG BRACKET, PC CARD CAGE
15	2	1-16-0111	MTG BAR, FREQ SW CONN
14			
13	2	RC07GF331K	RESISTOR, 330Ω, 1/4W, 10% "A-B"/EQU
12			
11	1	1-16-0115	CHANNEL ENUNCIATOR ASSY
10			
9	1	205208-1	CONNECTOR, 25 PIN PLUG "AMP"/EQUIV
8	1	205207-1	CONNECTOR, 25 PIN RECP "AMP"/EQUIV
7	3	205203-1	CONNECTOR, 9 PIN RECP "AMP"/EQUIV
6	6	50-44A-30	CONNECTOR, PC CARD "C-J" / EQUIV
5	5	50-10A-20	CONNECTOR, PC CARD "C-J" / EQUIV
4	1	910100-31	CONNECTOR, PC CARD "FABRI-TEK"/EQU
3			
2	REF	3-16-0383	FRONT PNL ASSY
1	1	1-16-0384	HARNESS ASSY P/L

LIST OF MATERIALS

NEXT ASSY	QTY	USED ON
16-0349	1	NAV 750A

APPLICATION

DRAWN JL 3-1-78

- IFR INC -
WICHITA, KANSAS

NAV-750A
WIRE HARNESS ASSY

SIZE C | PART NUMBER 4-16-0384 | SHEET 1 OF 1

DATE	REV	CHANGE	APP'D
		INITIAL RELEASE	

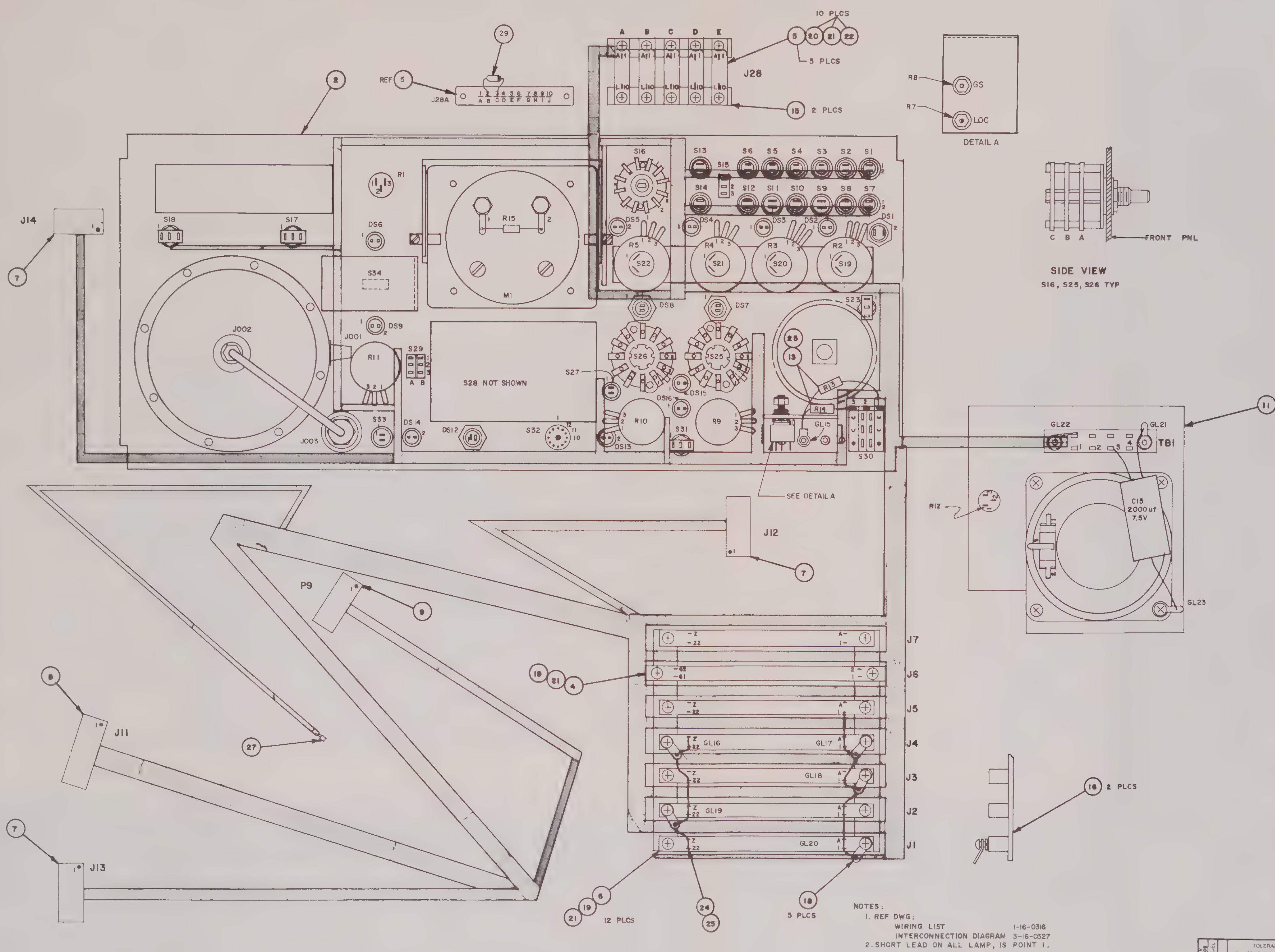

ITEM	REQ'D	PART NO	DESCRIPTION
29	1	IN4148	"DICKSON"/EQUIV DIODE
28			
27	1	60983-1	RECEPTACLE "AMP"/EQUIV
26			
25	A/R	26 AWG	SLEEVING
24	A/R	26 AWG	BUSS WIRE
23			
22	10	4-40	HEX NUT, LG PATTERN
21	24	# 4	LOCKWASHER, INT TOOTH
20	10	4-40 x 1/2	PBHMS
19	14	4-40 x 7/16	PBHMS
18	5	1411-4	SOLDER LUG "HH SMITH"/EQUIV
17			
16	2	2-16-0038	MTG BRACKET, PC CARD CAGE
15	2	1-16-0111	MTG BAR, FREQ SW CONN
14			
13	2	RC07GF331K	RESISTOR, 330Ω, 1/4W, 10% "A-B"/EQU
12			
11	1	1-16-0115	CHANNEL ENUNCIATOR ASSY
10			
9	1	205208-1	CONNECTOR, 25 PIN PLUG "AMP"/EQUIV
8	1	205207-1	CONNECTOR, 25 PIN RECP "AMP"/EQUIV
7	3	205203-1	CONNECTOR, 9 PIN RECP "AMP"/EQUIV
6	6	50-44A-30	CONNECTOR, PC CARD "C-J" / EQUIV
5	5	50-10A-20	CONNECTOR, PC CARD "C-J" / EQUIV
4	1	910100-31	CONNECTOR, PC CARD "FABRI-TEK"/EQU
3			
2	REF	3-16-0319	FRONT PNL ASSY
1	1	1-16-0317	HARNESS ASSY P/L

LIST OF MATERIALS

- IFR INC -
WICHITA, KANSAS

TITLE: WIRE HARNESS ASSY

SIZE: C | PART NUMBER: 4-16-0317 | SHEET 1 OF 1

NEXT ASSY: 16-0330 | USED ON: 1 | MODEL: NAV 750B

DATE	REV	CHANGE	APP'D
1/20/76	A	INCORP ECN # 1252 BB	MJ
42377	B	INC. ECN # 1838 MO	MJ

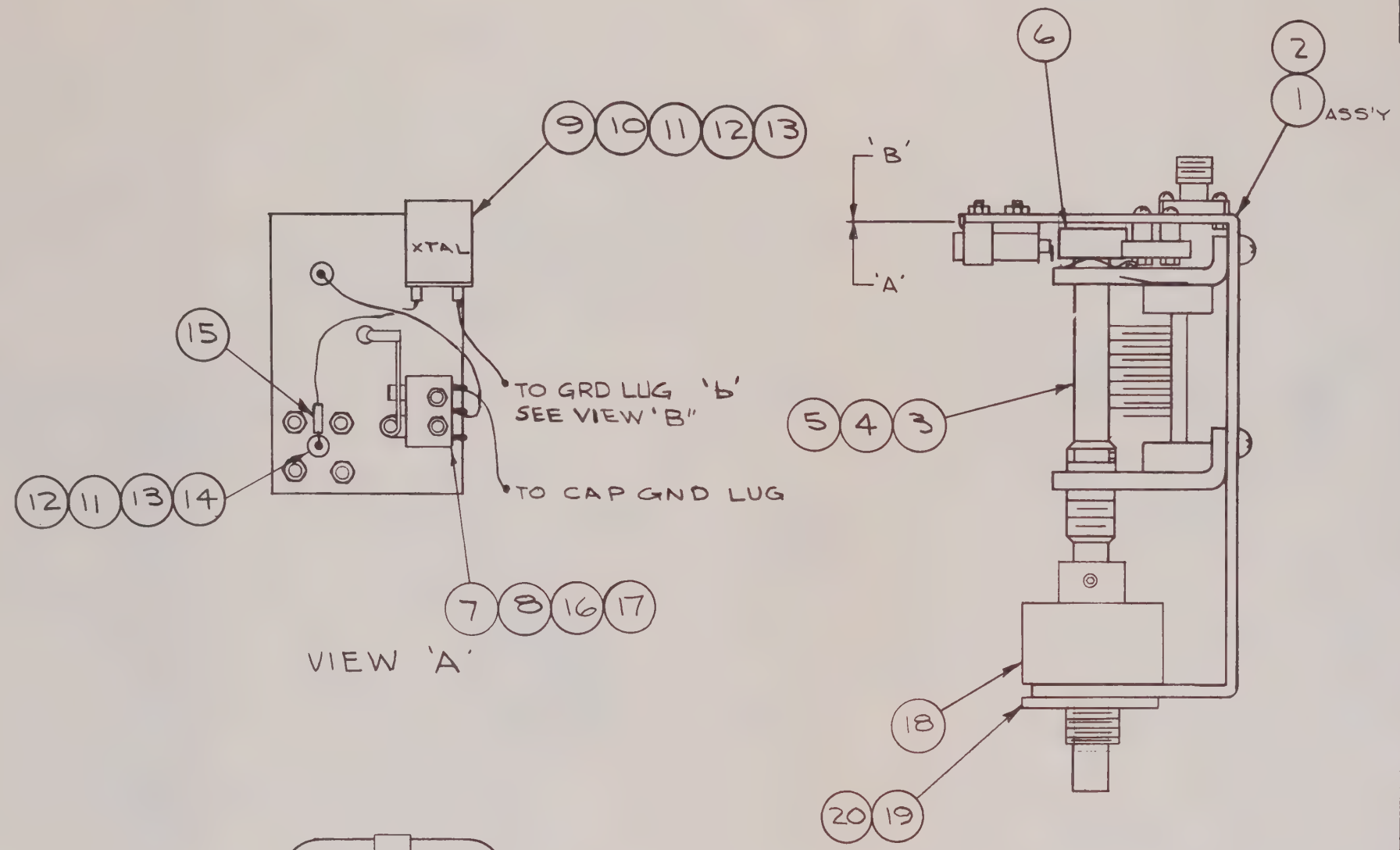

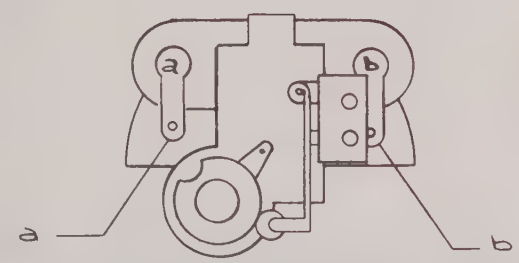

VIEW 'B'

NOTES:

1. COVER ALL BARE WIRES WITH #22GA. TEFLON SLEEVING.
2. ALIGN NOTCH IN BUSHING TO MICRO SWITCH WHEEL WITH CAPACITOR IN FULL OPEN POSITION.

ITEM	REQ'D	PART NO.	DESCRIPTION
20	3	#4-40X1/4	PHIL. SCREW, FLAT HEAD
19	1	16-0197	PLANETARY DRIVE ADAPTOR
18	1	76-0144	PLANETARY DRIVE
—	AS REQ'D	22GA.	TEFLON SLEEVE
—	AS REQ'D	22GA.	BUSS WIRE
17	2	#2-56X1/2	PHIL SCREW, BND. HD.
16	2	76-0001-2	SPACER
15	1	1025-48	15UH CHOKE
14	1	76-0052-2	MODIFIED CONNECTOR
13	6	#2	INT. TOOTH LOCKWASHER
12	6	#2-56	HEX NUT, SMALL PAT.
11	6	#2-56X1/4	PHIL. SCREW, BND HD.
10	1	8008-1G4	CRYSTAL HOLDER
9	1	76-0063-22	10.0065 MHz CRYSTAL
8	1	JX-25	MICRO SWITCH, MTG. KIT
7	1	115X21-T	MICRO SWITCH
6	1	16-0090	BUSHING, MICRO SW.
5	2	#6	INT. TOOTH LOCKWASHER
4	2	#6-32X1/4	PHIL. SCREW, BND HD.
3	1	76-0143	TUNING CAPACITOR
2	1	16-0198	MTG. BRKT., DELTA "F"
1	1	16-0205	ASSEMBLY

LIST OF MATERIALS

NEXT ASS'Y	QT'Y	MODEL
16-0205	1	NAV-750

APPLICATION

TOLERANCES
UNLESS OTHERWISE SPECIFIED
ALL DIMENSIONS APPLY AFTER FINISH
DECIMALS: ± .005
ANGLES: ± 1/2°
FRACTIONS: ± 1/64
SURFACE ROUGHNESS 125
REMOVE ALL BURRS

DRAWN JNV DATE 1/14/74
CHECKED MHL DATE 1-14-73
APPROVED QE DATE 1-15-74

MATERIAL ASSEMBLY
TREATMENT
FINISH

INSTRUMENT FLIGHT RESEARCH CORPORATION
WICHITA, KANSAS

TITLE
DELTA "F"
TUNING CAPACITOR
ASS'Y

SIZE B | PART NUMBER 2-16-0205 | REV B
SCALE 1:1 | WEIGHT — | SHEET 1 OF 1

Fig. 10-5

DATE	REV	CHANGE	APP'D

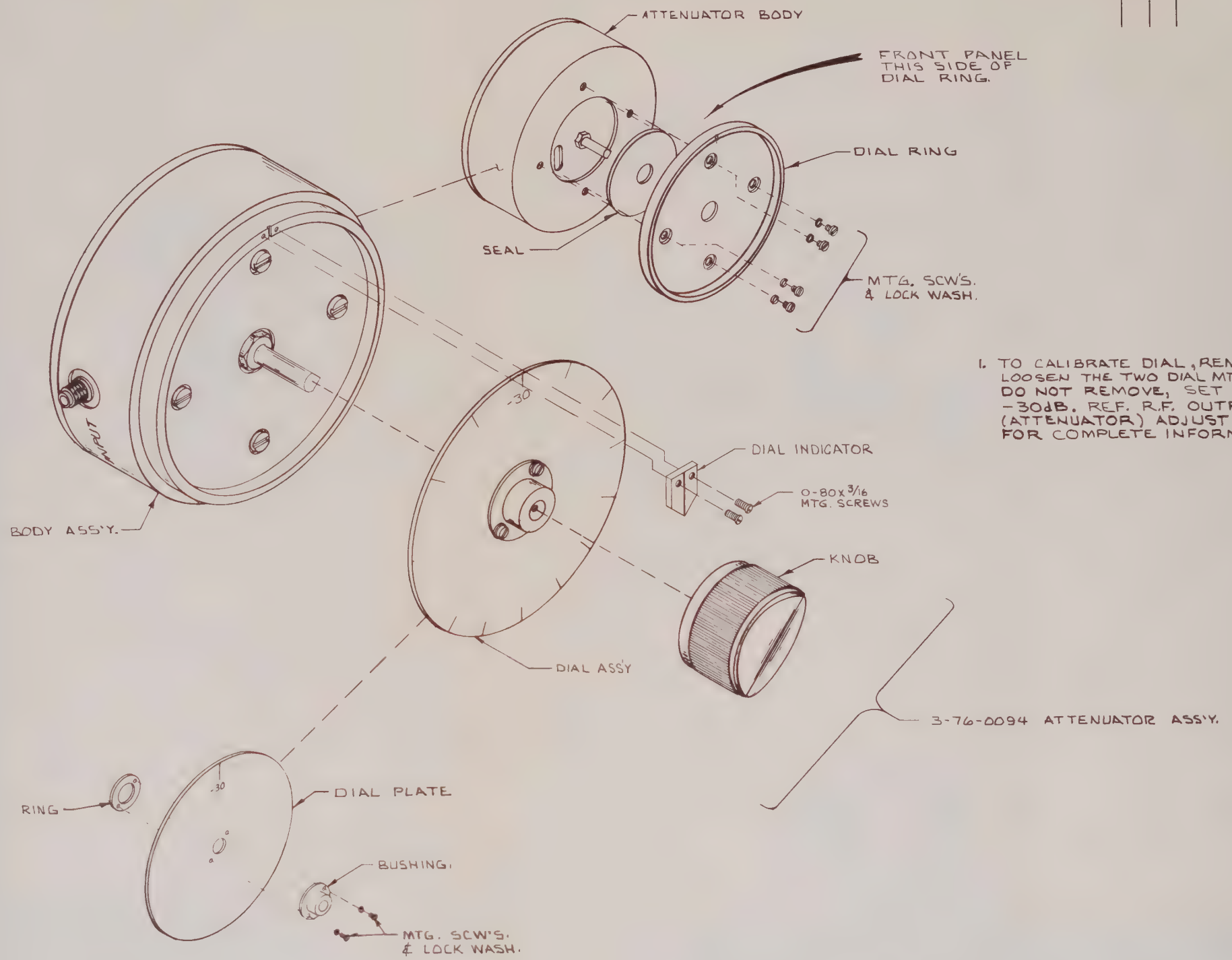

1. TO CALIBRATE DIAL, REMOVE KNOB & LOOSEN THE TWO DIAL MTG SCREWS BUT DO NOT REMOVE, SET DIAL TO -30dB. REF. R.F. OUTPUT LEVEL (ATTENUATOR) ADJUST PROCEDURE FOR COMPLETE INFORMATION

NEXT ASS'Y	QTY	MODEL	ITEM	REQ'D	PART NO.	DESCRIPTION
3-76-0094	1	NAV 150	1	1	346-0225	ATTENUATOR

APPLICATION — LIST OF MATERIALS

TOLERANCES
UNLESS OTHERWISE SPECIFIED
ALL DIMENSIONS APPLY AFTER FINISH
DECIMALS .xx = ± .010 .xxx = ± .005
ANGLES ± 1/2°
FRACTIONS ± 1/64
SURFACE ROUGHNESS 125 J
REMOVE ALL BURRS

MATERIAL NOTED
TREATMENT
FINISH

DRAWN DATE 12-17-74
CHECKED DATE 12-17-74
APPROVED DATE 12-17-74

INSTRUMENT FLIGHT RESEARCH CORPORATION
WICHITA, KANSAS.

TITLE ATTENUATOR ASSY.

SIZE — | PART NUMBER 3-16-0225 | REV
SCALE NONE | WEIGHT | SHEET 1 OF 1

DATE	REV	CHANGE	APP'D

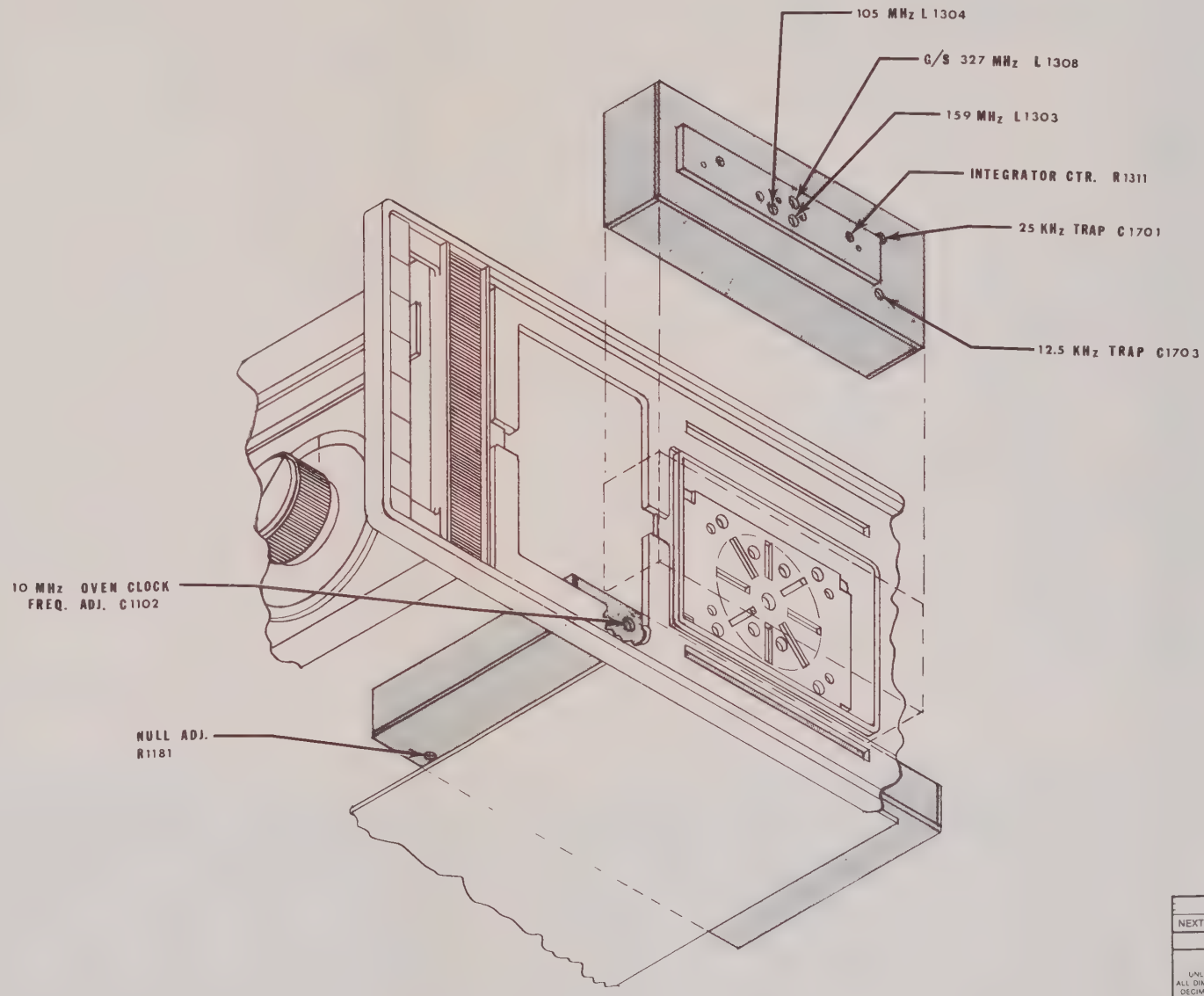

CALIBRATION ACCESS LOCATIONS – OSCILLATOR & Ø LOCK ASSEMBLIES.

NEXT ASS'Y	QTY	MODEL	ITEM	REQ'D	PART NO.	DESCRIPTION
	1	NAV-750	1	1		CAL. ACCESS DWG.

APPLICATION — LIST OF MATERIALS

TOLERANCES
UNLESS OTHERWISE SPECIFIED
ALL DIMENSIONS APPLY AFTER FINISH
DECIMALS .xx ± .010 .xxx ± .005
ANGLES ± 1/2°
FRACTIONS ± 1/64
SURFACE ROUGHNESS 125
REMOVE ALL BURRS

DRAWN DATE
CHECKED DATE
APPROVED DATE

INSTRUMENT FLIGHT RESEARCH CORPORATION
WICHITA, KANSAS

TITLE: CALIBRATION ACCESS DRAWING.

MATERIAL
TREATMENT
FINISH

SIZE | PART NUMBER 3-16-0237 | REV
SCALE NONE | WEIGHT | SHEET 1 OF 1

DATE	REV	CHANGE	APP'D
7/25/73	A	INCORPORATED ECN #1 JIG	
2-9-76	B	INCORP ECN #1245 SSD	
2-18-77	C	INC ECN 1898	

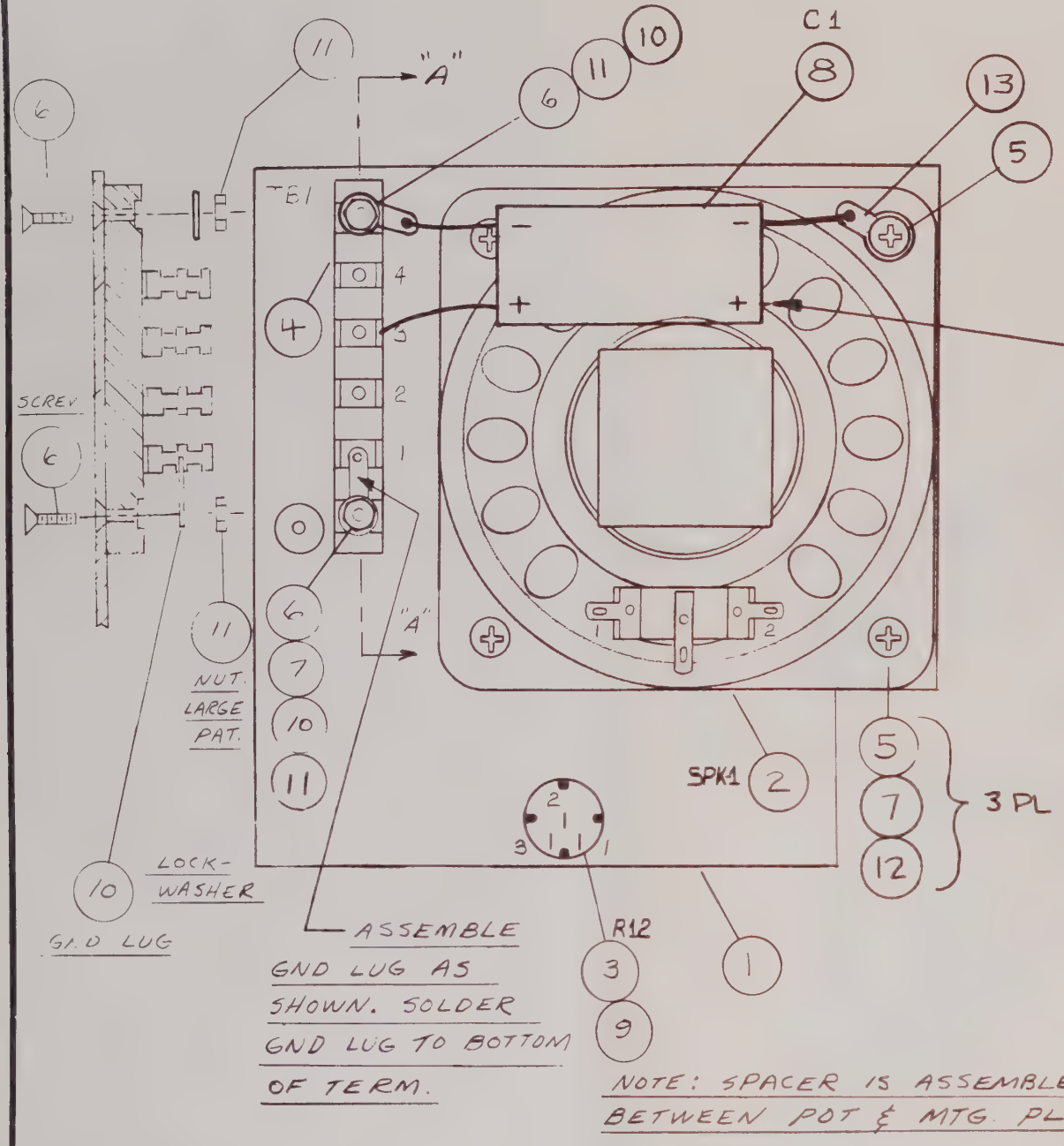

ITEM	REQ'D	PART NO.	DESCRIPTION
13	1	1411-6	"H H SMITH" / EQUIV GND LUG
12	3	#6	INT TOOTH LOCKWASHER
11	2	#4-40	HEX-NUT, LARGE PATTERN
10	2	1411-4	GROUND LUG
9	1	2-76-0001-19	SPACER
8	1	UFT-2000-7.5	"CDE" / EQUIV CAP
7	2	#6	FLAT WASHER
6	2	#4-40 X 1/2	PHILLIPS SCREW, FLAT HD.
5	4	#6-32 X 3/16	PHILLIPS SCREW, BND HD.
4	1	4-170	CINCH-JONES" TERMINAL STRIP
3	1	RVGLAY SA101B	"CLAROSTAT" 100Ω POT
2	1	AD3370	"AMPEREX" SPEAKER
1	1	2-16-0095	MTG. PLATE, SPEAKER

LIST OF MATERIALS

NEXT ASS'Y	QT'Y	MODEL
16-0115	1	NAV-750

APPLICATION

TOLERANCES
UNLESS OTHERWISE SPECIFIED
ALL DIMENSIONS APPLY AFTER FINISH
DECIMALS: ± .005
ANGLES: ± 1/2°
FRACTIONS: ± 1/64
SURFACE ROUGHNESS 125 √
REMOVE ALL BURRS

DRAWN TML 6/14/73
CHECKED MHL 7-14-73
APPROVED [illegible] 7-14-73

MATERIAL SEE DESCRIPTION
TREATMENT —
FINISH —

INSTRUMENT FLIGHT RESEARCH CORPORATION
WICHITA, KANSAS

TITLE
CHANNEL ENUNCIATOR ASSY
NAV-750

SIZE	PART NUMBER	REV
B	2-16-0115	B

SCALE 1 : 1 | WEIGHT — | SHEET 1 OF 1

DATE	REV	CHANGE	APP'D
2-20-78	A	ADDED COAX CHART 'B' AND ADDED NOTES 1 THRU 3, T,J,T	

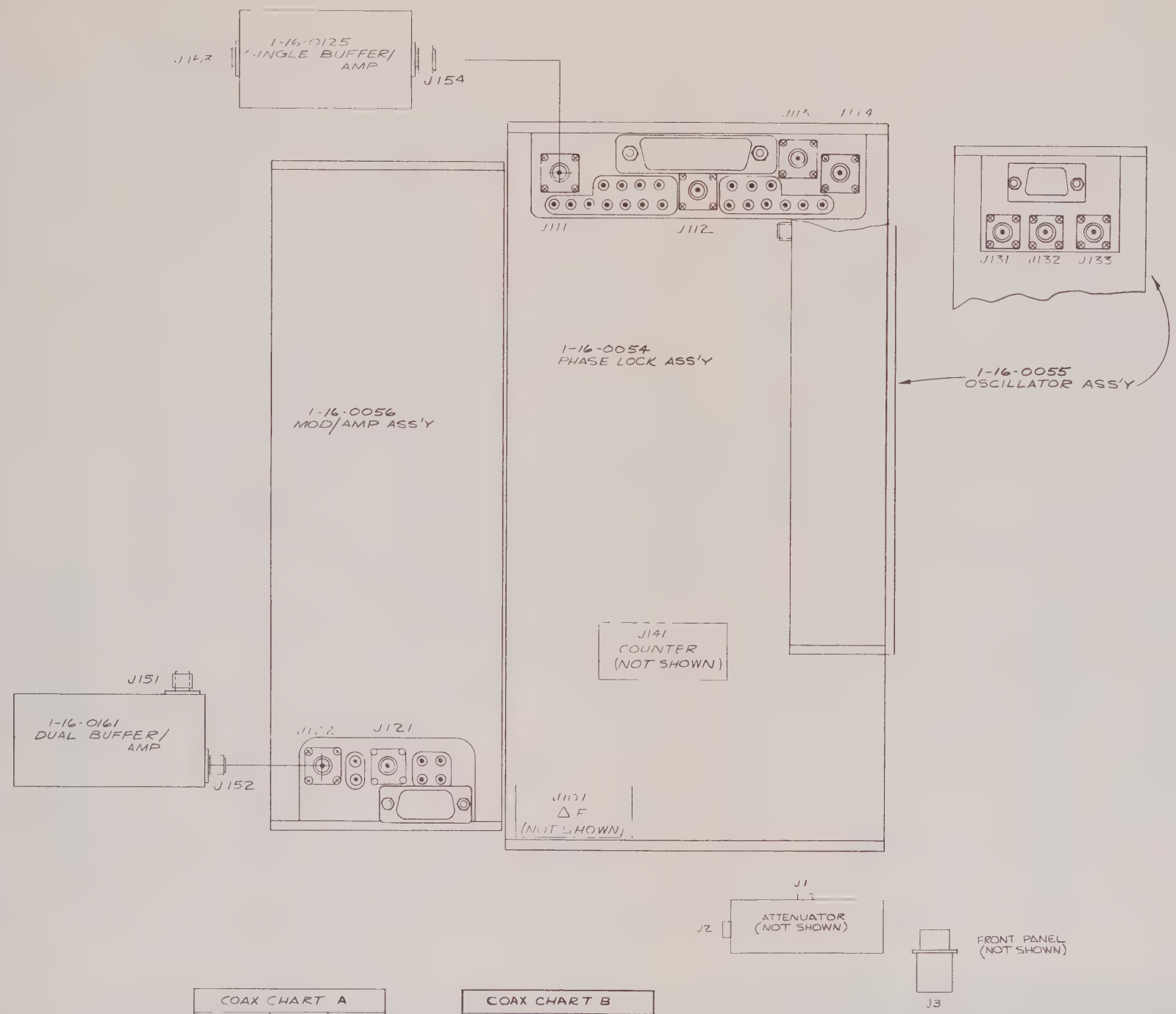

COAX CHART A		
P/N	FROM	TO
3-16-0133	J121	J1
2-16-0134	J124	J101
3-16-0136	J131	J151
2-16-0137	J111	J154
2-16-0138	J112	J132
2-16-0145	J113	J141
2-16-0135	J2	J3

COAX CHART B		
P/N	FROM	TO
3-16-0133	J121	J1
3-16-0363	J124	J101
3-16-0364	J131	J151
2-16-0365	J111	J154
2-16-0362-1	J112	J132
2-16-0145-2	J113	J141
2-16-0135	J2	J3

3 USE 2-16-0362-2 ASSEMBLY IN PLACE OF 2-16-0362-1 WHEN TUNE LINE FILTER IS INSTALLED.

2. COAX CHART 'B' EFFECTIVE: NAV-750 S/N 403 AND ON, NAV-750A S/N 381 AND ON, NAV-750B S/N 2001 AND ON.

1. COAX CHART 'A' EFFECTIVE: NAV-750 S/N 101-402, NAV 750 A S/N THRU 380.

NOTES:

NEXT ASS'Y	QT'Y	MODEL	ITEM	REQ'D	PART NO.	DESCRIPTION
	1	NAV-750	—	—	16-0163	RF FLOOR - COAX ASS'Y

APPLICATION — LIST OF MATERIALS

TOLERANCES
UNLESS OTHERWISE SPECIFIED
ALL DIMENSIONS APPLY AFTER FINISH
DECIMALS .xx = ± .010 .xxx = ± .005
ANGLES ± 1/2°
FRACTIONS ± 1/64
SURFACE ROUGHNESS 125
REMOVE ALL BURRS
J

DRAWN JNV DATE 9/25/73
CHECKED MHP DATE 9-25-73
APPROVED DATE 9/26/73

INSTRUMENT FLIGHT RESEARCH CORPORATION
WICHITA, KANSAS

TITLE RF FLOOR - COAX ASS'Y CONNECTION DIAGRAM NAV-750

MATERIAL ASSEMBLY
TREATMENT
FINISH

SIZE C | PART NUMBER 3-16-0163 | REV A
SCALE 1:1 | WEIGHT | SHEET 1 OF 1

Fig. 10-9

DATE	REV	CHANGE	APP'D
11/4/75	A	INCORPORATED ECN#1 JNV	JE

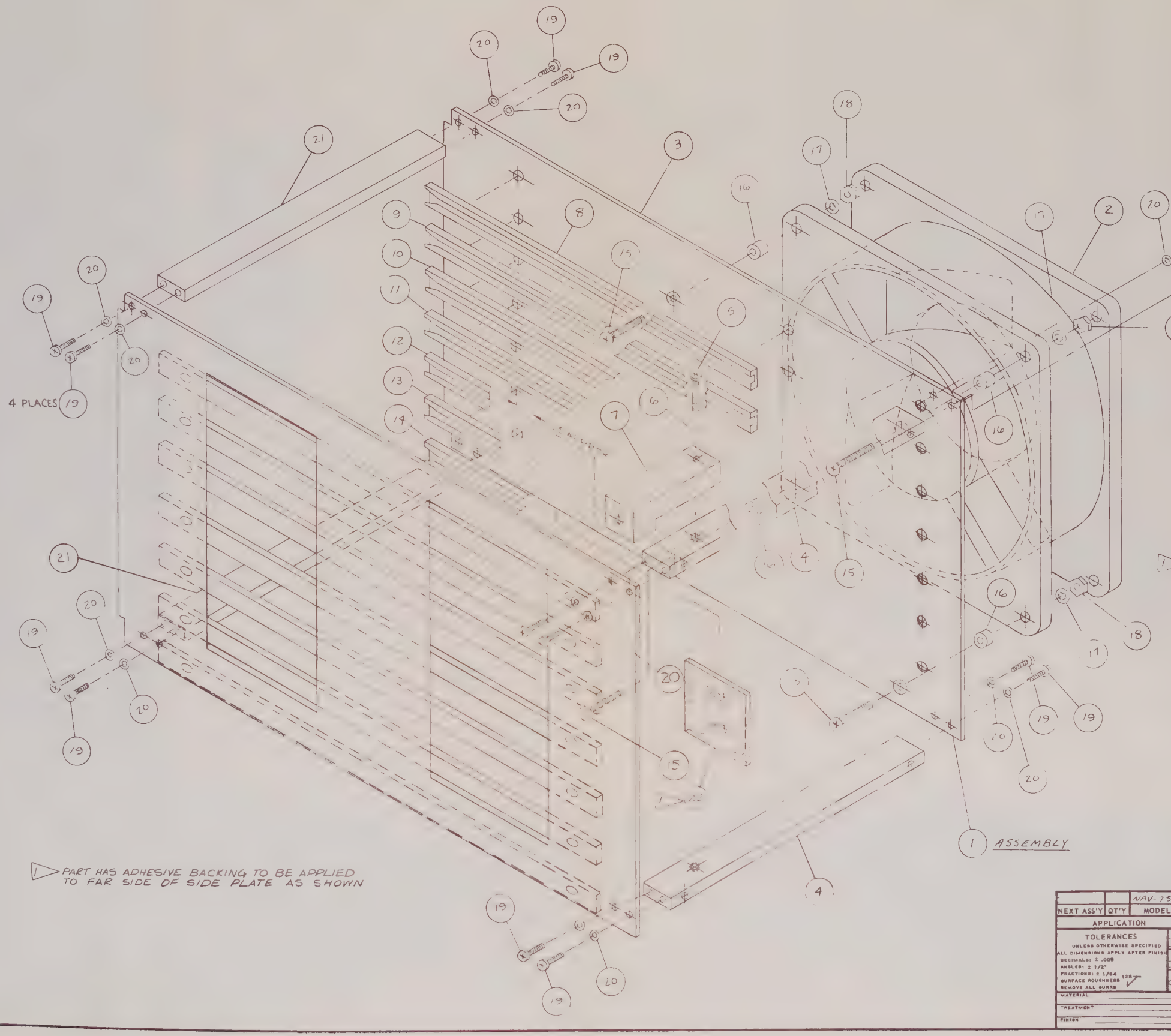

22	1	ABMS-A-C	CABLE TIE MOUNT
21	2	1-16-0089	SPACER, P.C. CARD CAGE
20	16	#4	INT. TOOTH LOCKWASHER
19	16	#4-40 x 5/16	PHILLIPS SCREW, BND. HD
18	4	#4-40	NUT, LARGE PATTERN
17	4	#4	INT. TOOTH LOCKWASHER
16	4	2-76-0001-1	#4 STANDOFF, .20 LG.
15	4	#4-40 x 3/4	PHILLIPS SCREW, FLAT HD
14	2	2-76-0076	CARD RAIL (VIOLET)
13	2	2-76-0033	CARD RAIL (BLUE)
12	2	2-76-0032	CARD RAIL (GREEN)
11	2	2-76-0077	CARD RAIL (YELLOW)
10	2	2-76-0076	CARD RAIL (ORANGE)
9	2	2-76-0031	CARD RAIL (RED)
8	2	2-76-0075	CARD RAIL (BROWN)
7	1	1-16-0119	SIDE SUPPORT BRKT P.C. CARD CAGE
6	1	#6	INT. TOOTH LOCKWASHER
5	1	#6-32 x 1/2	PHILLIPS SCREW, BND. HD.
4	2	1-16-0037	SPACER, P.C. CARD CAGE
3	2	3-16-0039	SIDE PLATE, P.C. CARD CAGE
2	1	2-76-0109	FAN
1	1	1-16-0036	CARD CAGE ASS'Y
NEXT ASS'Y	QT'Y	MODEL	ITEM REQ'D	PART NO.	DESCRIPTION
		NAV-750			

APPLICATION

LIST OF MATERIALS

TOLERANCES
UNLESS OTHERWISE SPECIFIED
ALL DIMENSIONS APPLY AFTER FINISH
DECIMALS: ± .005
ANGLES: ± 1/2°
FRACTIONS: ± 1/64
SURFACE ROUGHNESS 125 ✓
REMOVE ALL BURRS

DRAWN JIG 6/26/73
CHECKED JNV 9-27-73
APPROVED 9-17-73

MATERIAL
TREATMENT
FINISH

INSTRUMENT FLIGHT RESEARCH CORPORATION
WICHITA, KANSAS

TITLE: CARD CAGE ASS'Y NAV-750

SIZE | PART NUMBER 3-16-0036 | REV A

SCALE 1:1 | WEIGHT | SHEET 1 OF 1

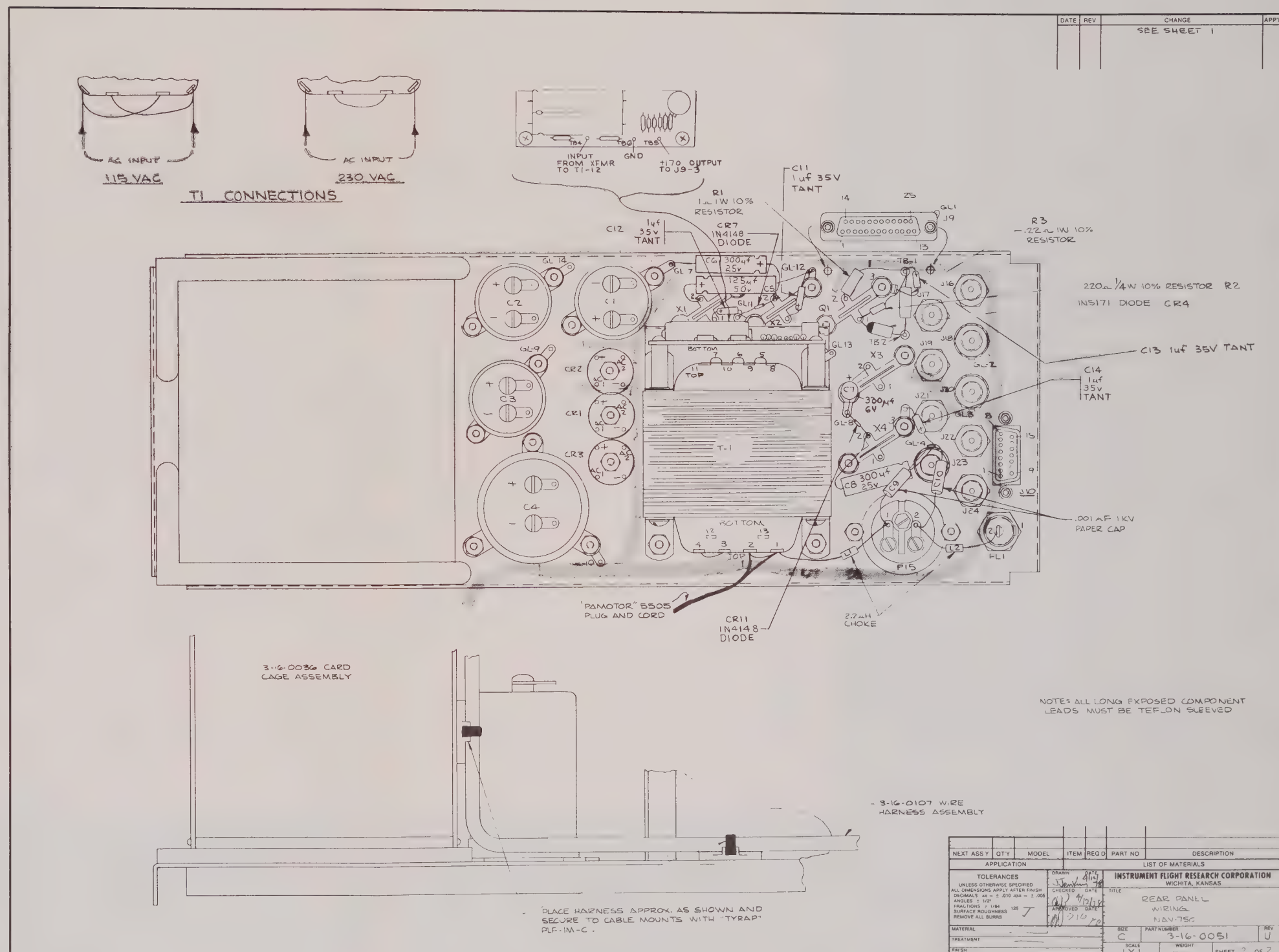

DATE
REV
CHANGE
APP'D
SEE SHEET 1
AC INPUT
115 VAC
AC INPUT
230 VAC
T1 CONNECTIONS
INPUT FROM XFMR TO T1-12
GND
+170 OUTPUT TO J9-3
C11 1uf 35V TANT
R1 1Ω 1W 10% RESISTOR
CR7 1N4148 DIODE
C12 1uf 35V TANT
R3 .22Ω 1W 10% RESISTOR
220Ω 1/4W 10% RESISTOR R2
1N5171 DIODE CR4
C13 1uf 35V TANT
C14 1uf 35V TANT
.001 uF 1KV PAPER CAP
"PAMOTOR" 5505 PLUG AND CORD
CR11 1N4148 DIODE
2.2uH CHOKE
3-16-0036 CARD CAGE ASSEMBLY
NOTE: ALL LONG EXPOSED COMPONENT LEADS MUST BE TEFLON SLEEVED
3-16-0107 WIRE HARNESS ASSEMBLY
PLACE HARNESS APPROX. AS SHOWN AND SECURE TO CABLE MOUNTS WITH "TYRAP" PLF-1M-C.
NEXT ASS'Y
QTY
MODEL
ITEM
REQ'D
PART NO
DESCRIPTION
APPLICATION
LIST OF MATERIALS
TOLERANCES
INSTRUMENT FLIGHT RESEARCH CORPORATION
WICHITA, KANSAS
REAR PANEL WIRING NAV-75C
SIZE C
PART NUMBER 3-16-0051
REV U
SCALE 1X1
WEIGHT
SHEET 2 OF 2

Fig. 10-11

DATE	REV	CHANGE	APP'D
11-3-75	A	INCORP ECN #1086 SSD	GE
8-12-76	B	INCORP ECN # 1507 JNV	MP

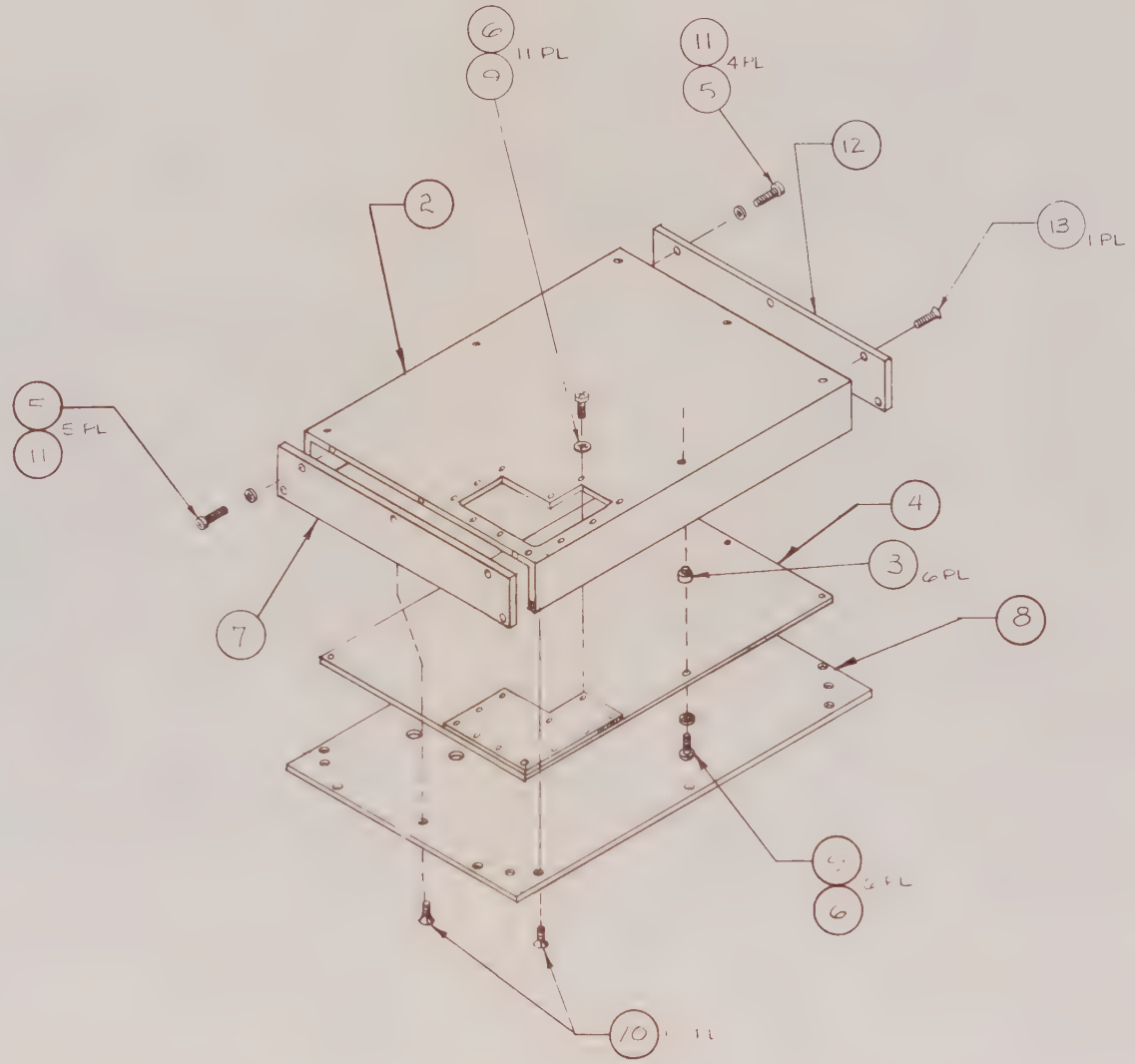

NAV-750A EFFECTIVE S/N: 101-380

Eff: NAV-750A prior to S/N 381

ITEM	REQ'D	PART NO.	DESCRIPTION
13	1	#4-40X1/4	PFHMS
12	1	16-0182-2	END PLATE
11	9	#4	INT TOOTH LOCKWASHER
10	12	#4-40X3/8	PHILLIPS FLAT HD MACH SCW.
9	17	#2-56X5/16	PHILLIPS BIND HD MACH. SCW.
8	1	2-16-0181	COVER
7	2	16-0182-1	END PLATE
6	17	#2	INT. TOOTH LW.
5	9	#4 40X3/8	PHIL. BIND HD, MACH, SCW.
4	1	1-16-0184	8STEP OSC. PC. BD ASS'Y.
3	6	350-2184-27-07	"CAMBION" SPACER
2	1	3-16-0180	OSC. HOUSING
1	1	1-16-0187	8STEP OSCILLATOR

LIST OF MATERIALS

NEXT ASS'Y	QT'Y	MODEL
16-0187	1	NAV-750

APPLICATION

TOLERANCES
UNLESS OTHERWISE SPECIFIED
ALL DIMENSIONS APPLY AFTER FINISH
DECIMALS .xx = ± .010 .xxx = ± .005
ANGLES ± 1/2°
FRACTIONS ± 1/64
SURFACE ROUGHNESS 125 J
REMOVE ALL BURRS

DRAWN GE DATE 1-20-75
CHECKED GE DATE 1-18-75
APPROVED GE DATE 1-18-75

MATERIAL NOTED
TREATMENT —
FINISH —

INSTRUMENT FLIGHT RESEARCH CORPORATION
WICHITA, KANSAS.

TITLE 8 STEP OSCILLATOR ASS'Y. PHYSICAL

SIZE C | PART NUMBER 3-16-0187 | REV B
SCALE NONE | WEIGHT — | SHEET 1 OF 1

10-14 Fig. 10-12

DATE	REV	CHANGE	APP'D

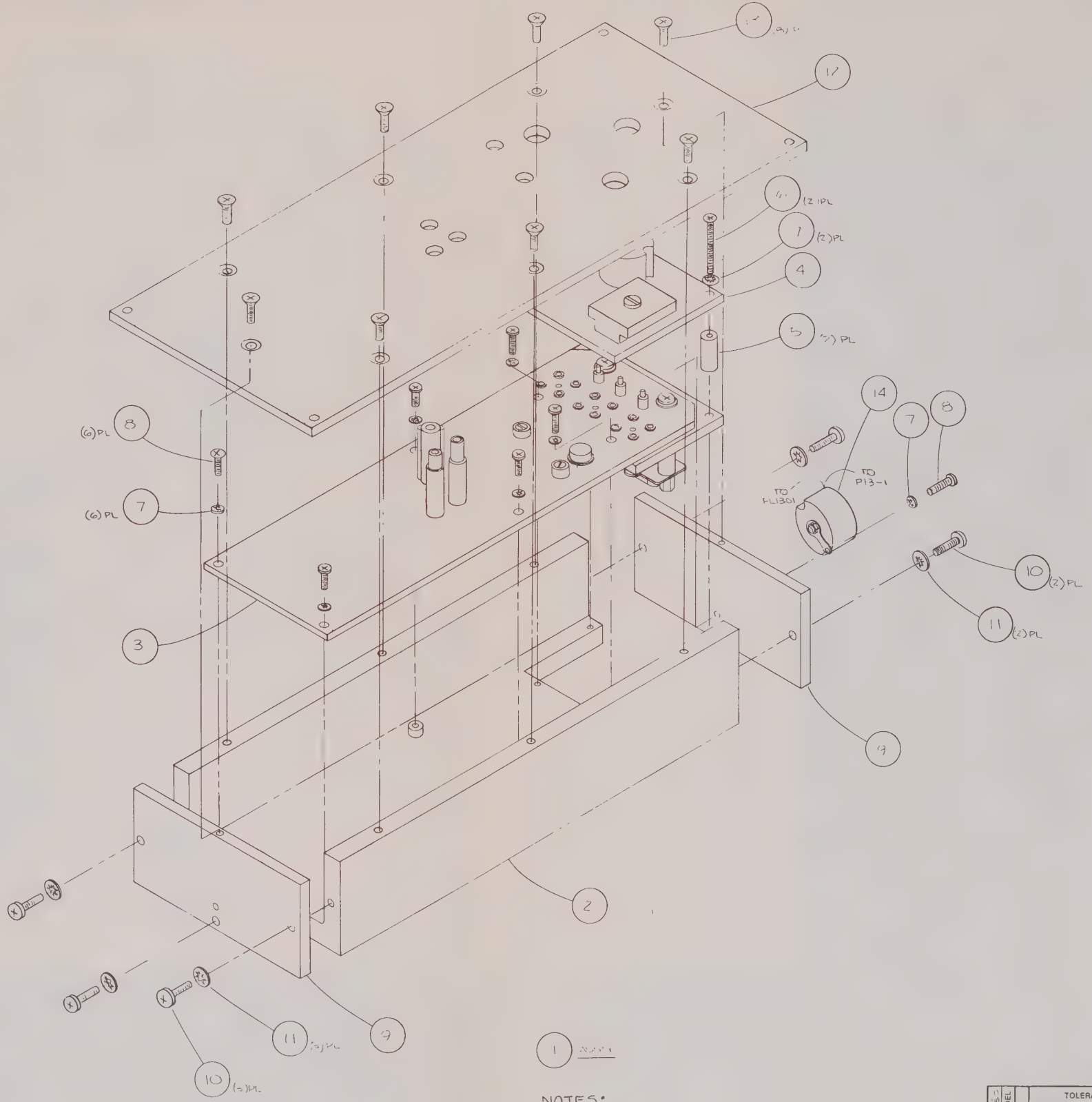

ITEM	REQ'D	PART NO.	DESCRIPTION
14	1	16-0174	100 TURN COIL ASS'Y
13	8	#4-40X5/16	PFHMS
12	1	16 0358	COVER
11	5	#4	INT TOOTH LOCKWASHER
10	5	#4-40X5/16	PBHMS
9	7	16-0165	END PLATE
8	7	#1/56X5/16	PBHMS
7	9	#2	INT TOOTH LOCKWASHER
6	2	#2-56X3/4	PBHMS
5	2	76 0001-60	SPACER
4	1	16 0209	12.5 KHz OSC. ACCESSORY BD
3	1	16 00-4	OSCILLATOR PC BOARD ASS'Y
2	1	16 0263	OSCILLATOR HOUSING BLOCK
1	1	16 0359	OSCILLATOR ASS'Y

LIST OF MATERIALS

NOTES:
1. THIS ASSY EFF:
NAV 750 S/N: ALL

NEXT ASSY	QTY	MODEL
0359	1	

APPLICATION

TOLERANCES
UNLESS OTHERWISE SPECIFIED
ALL DIMENSIONS APPLY AFTER FINISH
DECIMALS .XX = ± .010 .XXX = ± .005
ANGLES = 1/2°
FRACTIONS = 1/64
SURFACE ROUGHNESS 125
REMOVE ALL BURRS

DRAWN DATE
CHECKED DATE
APPROVED DATE

MATERIAL

FINISH

- IFR INC -
WICHITA, KANSAS

TITLE
OSCILLATOR ASS'Y
NAV 15:

SIZE | PART NUMBER 16-0359-1 | REV

SCALE | WEIGHT | SHEET 1 OF 1

(Sheet 1 of 2) Fig. 10-13

DATE	REV	CHANGE	APP'D
3-8-78	A	INC. ECN 2813, 2850 JJ	WW

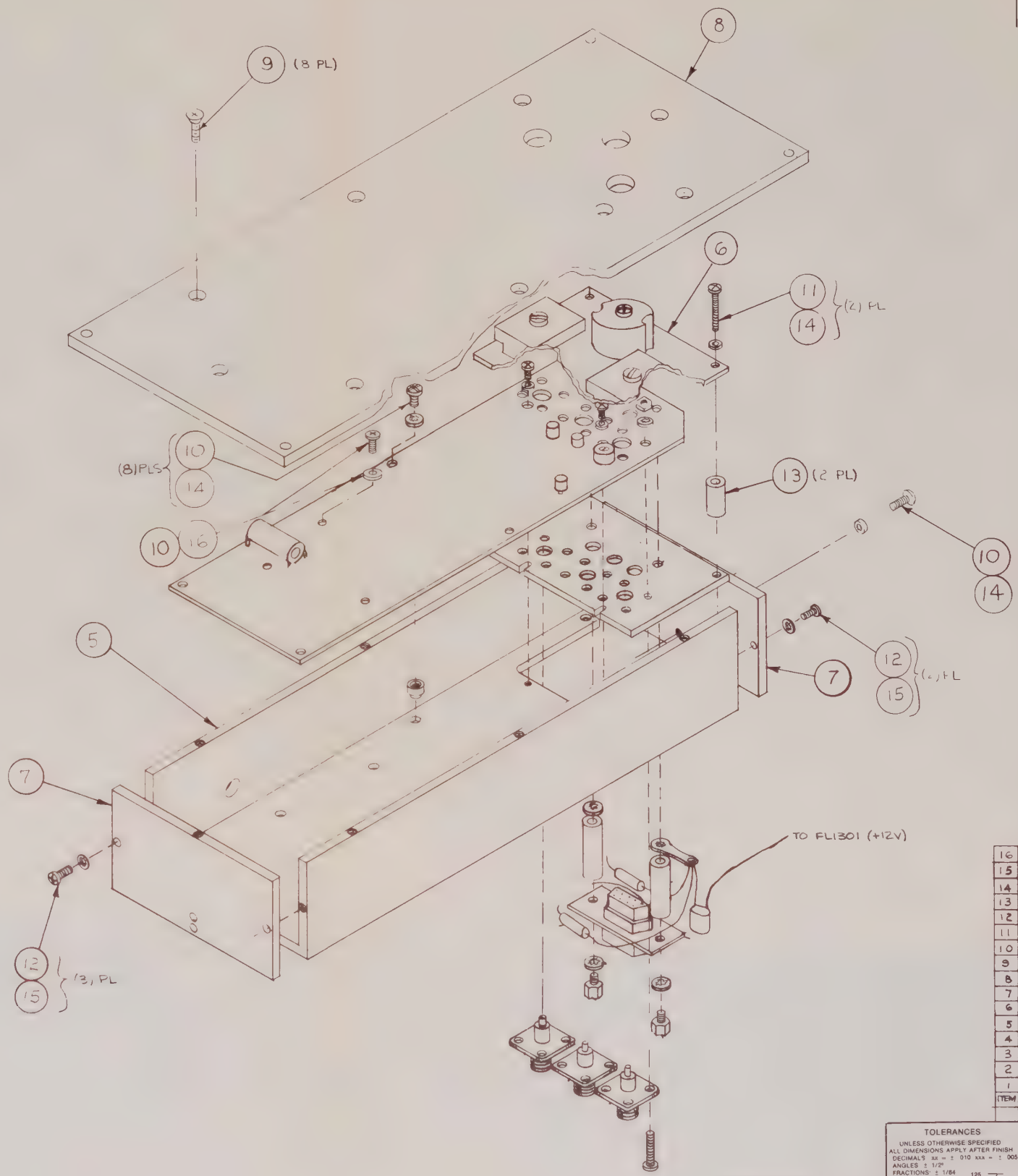

ITEM	REQ'D	PART NO.	DESCRIPTION
16	1	76-0002-9	PHENOLIC WASHER
15	5	#4	
14	11	#2	
13	2	2-76-0001-60	SPACER
12	5	#4-40 x 3/16	PBHMS
11	2	#2-56 x 3/4	PBHMS
10	10	#2-56 x 5/16	PBHMS
9	8	#4-40 x 5/16	PFHMS
8	1	3-16-0358	COVER
7	2	1-16-0265	END PLATE
6	1	1-16-0208	12.5 KHz @ LOCK SYSTEM
5	1	3-16-0263-1	OSCILLATOR HOUSING
4	1	3-16-0332	OSC. P.C. BD. ASS'Y
3			
2			
1	1	3-16-0360	OSC. ASS'Y

LIST OF MATERIALS

TOLERANCES
UNLESS OTHERWISE SPECIFIED
ALL DIMENSIONS APPLY AFTER FINISH
DECIMALS .XX = ± .010 .XXX = ± .005
ANGLES ± 1/2°
FRACTIONS ± 1/64
SURFACE ROUGHNESS 125 ✓
REMOVE ALL BURRS

DRAWN RKK 3/23/77
CHECKED WW 4/8/77
APPROVED MWG 4/8/77

INSTRUMENT FLIGHT RESEARCH CORPORATION
WICHITA, KANSAS.

TITLE: OSCILLATOR ASS'Y. NAV 750A

SIZE	PART NUMBER	REV
C	3-16-0360	A

SCALE: NONE | WEIGHT | SHEET 1 OF 1

16-0349	1	NAV750A
NEXT ASS'Y	QTY	MODEL
APPLICATION		

MATERIAL NOTED
TREATMENT
FINISH

1. THIS ASS'Y. EFF: 750A S/N: 381 & ON
NOTES:

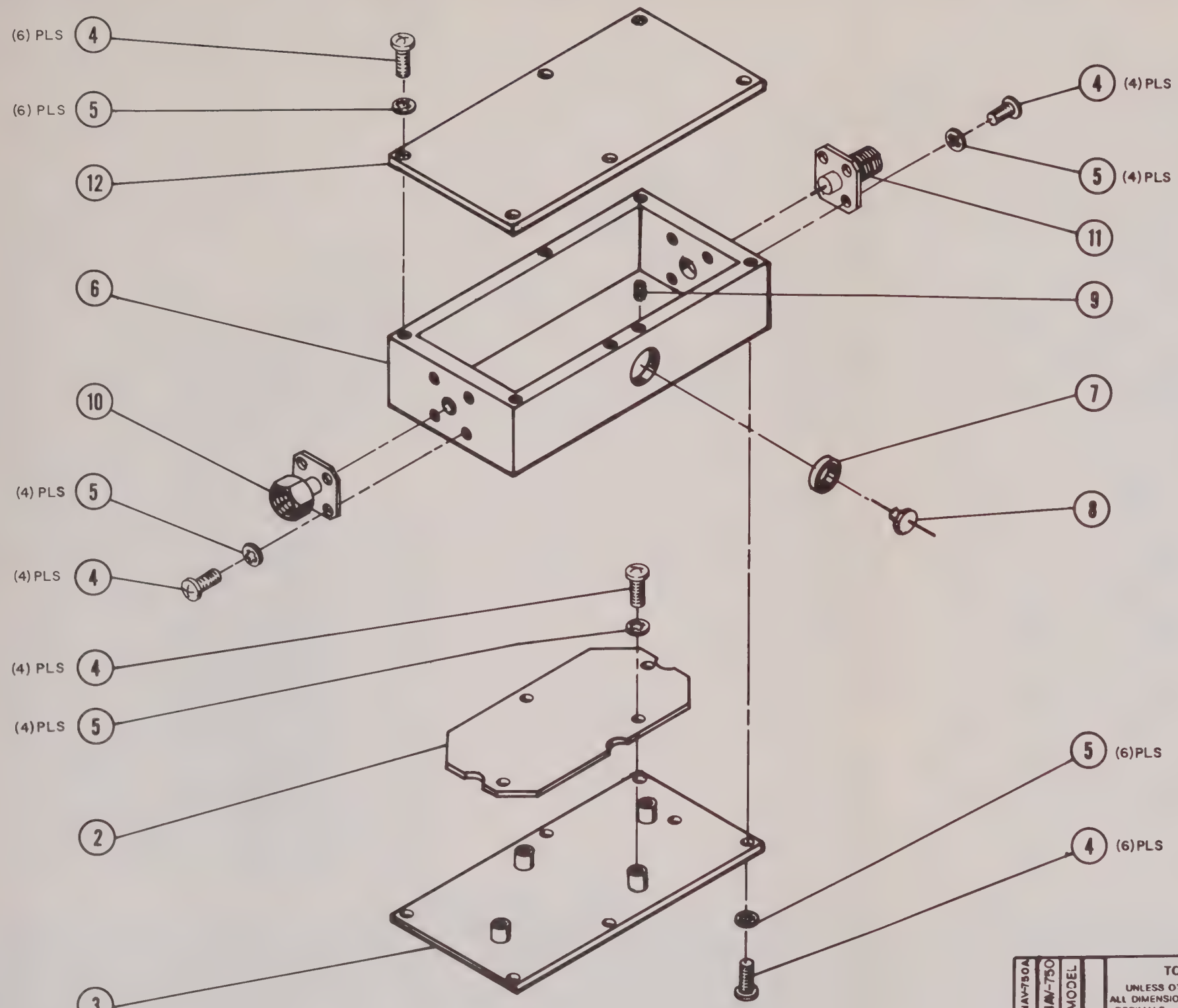

DATE	REV	CHANGE	APP'D

EFFECTIVITY:

NAV-750, 101-402
NAV-750A, 101-380

ITEM	REQ'D	PART NO.	DESCRIPTION
12	1	1-16-0169	BUFFER AMPLIFIER HOUSING COVER
11	1	1-76-0111	"AMERICON"/EQUIV MODIFIED CONNECTOR
10	1	1-76-0112	"AMERICON"/EQUIV MODIFIED CONNECTOR
9	1	#2-56x1/4	SOCKET HEAD SET SCREW
8	1	FA5C-102W	"ALLEN-BRADLEY"/EQUIV FEEDTHRU CAPACITOR
7	1	2-76-0001-18	CAPACITOR BUSHING
6	1	1-16-0177	BUFFER AMPLIFIER HOUSING
5	24	# 2	INTERNAL TOOTH LOCKWASHER
4	24	#2-56x1/4	PBHMS
3	1	1-16-0170	CIRCUIT BOARD MOUNTING PLATE
2	1	1-16-0184	BUFFER AMPLIFIER PC BD. ASSEMBLY
1	1	2-16-0125	SINGLE BUFFER AMPLIFIER ASSEMBLY

LIST OF MATERIALS

NAV-750A	NAV-750	MODEL
1	1	QT'Y
16-0342	16-0052	NEXT ASS'Y

APPLICATION

TOLERANCES
UNLESS OTHERWISE SPECIFIED
ALL DIMENSIONS APPLY AFTER FINISH
DECIMALS: .xx = ± .010 .xxx = ± .005
ANGLES: ± 1/2°
FRACTIONS: ± 1/64
SURFACE ROUGHNESS 125 ✓
REMOVE ALL BURRS

DRAWN Ton Eyck DATE 5-11-78
CHECKED Rac DATE 11 MAY 78
APPROVED DATE

MATERIAL SEE "LIST of MATERIALS"
FINISH

- IFR INC -
WICHITA, KANSAS

TITLE
SINGLE BUFFER AMPLIFIER ASSEMBLY

SIZE B | PART NUMBER 2-16-0125 | REV
SCALE 1 = 1 | WEIGHT | SHEET 1 OF 1

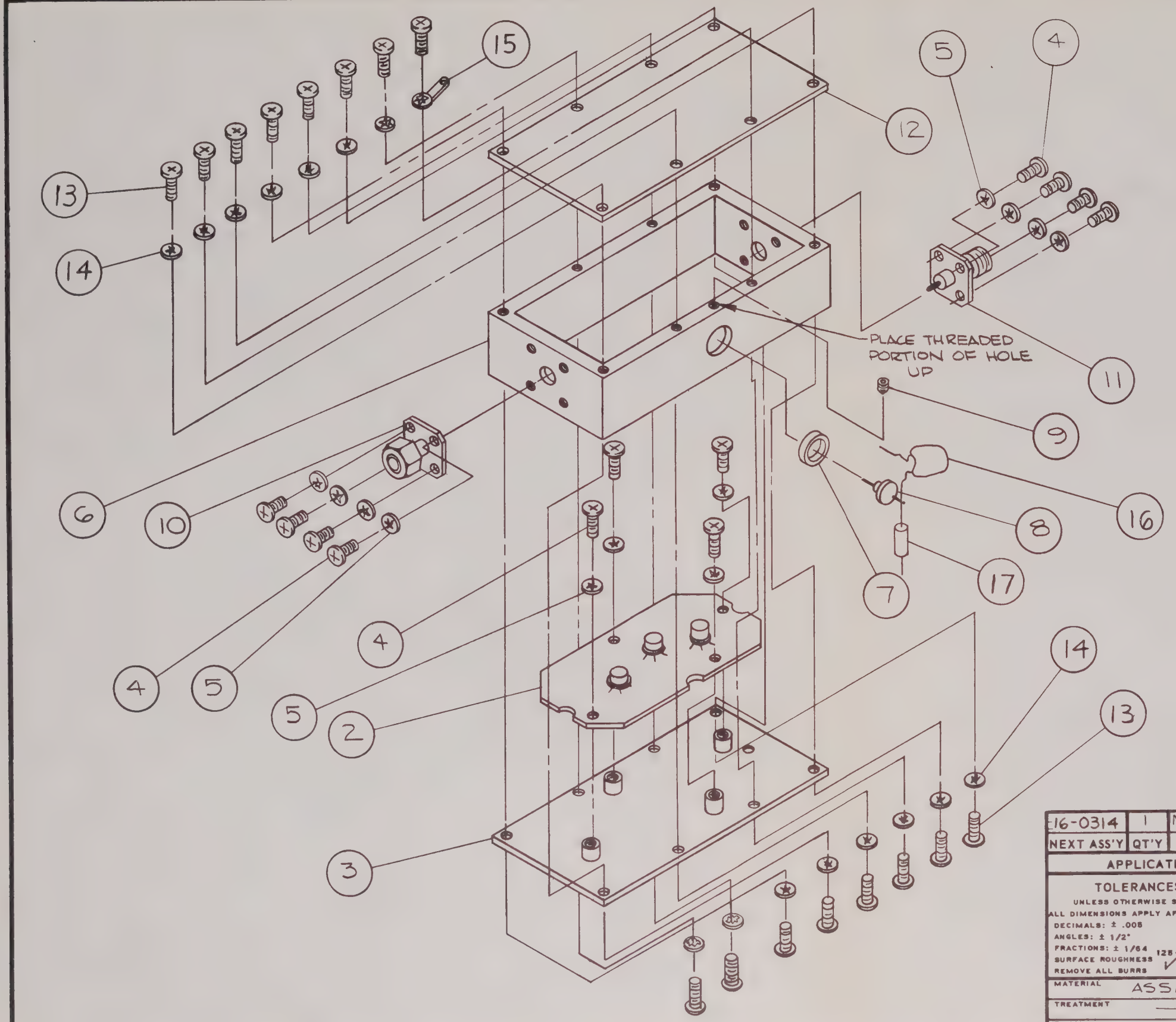

DATE	REV	CHANGE	APP'D
11/8/76	A	INC ECN#1778 RKK	
2/18/77	B	INCORP ECN#1920 JNV	

NOTES:

1. USE EITHER 1-76-0272 OR 1-76-0185-1
2. USE EITHER 1-76-0052-2 OR 1-76-0101
3. THIS ASSY EFF:
   750 S/N: 403 & ON
   750A S/N: 381 & ON
   750B S/N: 2001 & ON

ITEM	REQ'D	PART NO.	DESCRIPTION
17	1	1025-52	"DELEVAN"/EQUIV. COIL 22μf
16	1	T362D476 M035AS	"KEMET"/EQUIV 47μf 35v TANT CAP
15	1	1411-4	GND LUG
14	15	#4	INT TOOTH LOCKWASHER
13	16	#4-40X1/4	PBHMS
12	1	16-0243	COVER, BUFFER HOUSING
11	1	2	"AMERICON" CONNECTOR
10	1	1	"AMERICON" CONNECTOR
9	1	#4-40X3/32	SET SCREW SOCKET HD
8	1	FA3C-102W	"ALLEN-BRADLEY FEEDTHRU CAPACITOR
7	1	2-76-0001-18	CAPACITOR BUSHING
6	1	16-0241	BUFFER AMP HOUSING
5	12	#2	INT TOOTH LOCKWASHER
4	12	#2-56X1/4	PHIL. SCREW, BND HD
3	1	16-0242	CKT BD MTG PLATE
2	1	16-0310	BUFFER AMP P.C. BD ASS'Y
1	1	16-0313	BUFFER AMPLIFIER ASS'Y

LIST OF MATERIALS

NEXT ASS'Y	QT'Y	MODEL
16-0314	1	NAV-750B

APPLICATION

TOLERANCES
UNLESS OTHERWISE SPECIFIED
ALL DIMENSIONS APPLY AFTER FINISH
DECIMALS: ± .008
ANGLES: ± 1/2°
FRACTIONS: ± 1/64
SURFACE ROUGHNESS 125 √
REMOVE ALL BURRS

DRAWN DATE: RKK 10/13/76
CHECKED DATE: WW 10/14/76
APPROVED DATE: MJO 10/15/76

MATERIAL: ASSEMBLY
TREATMENT:
FINISH:

INSTRUMENT FLIGHT RESEARCH CORPORATION
WICHITA, KANSAS

TITLE: SINGLE BUFFER AMPLIFIER ASSEMBLY NAV-750

SIZE	PART NUMBER	REV
B	2-16-0313	B

SCALE: 1:1 | WEIGHT: — | SHEET 1 OF 1

NOTES:
1. THIS ASSY EFF:
750 S/N : 101-402
750A S/N : 101-380

DATE	REV	CHANGE

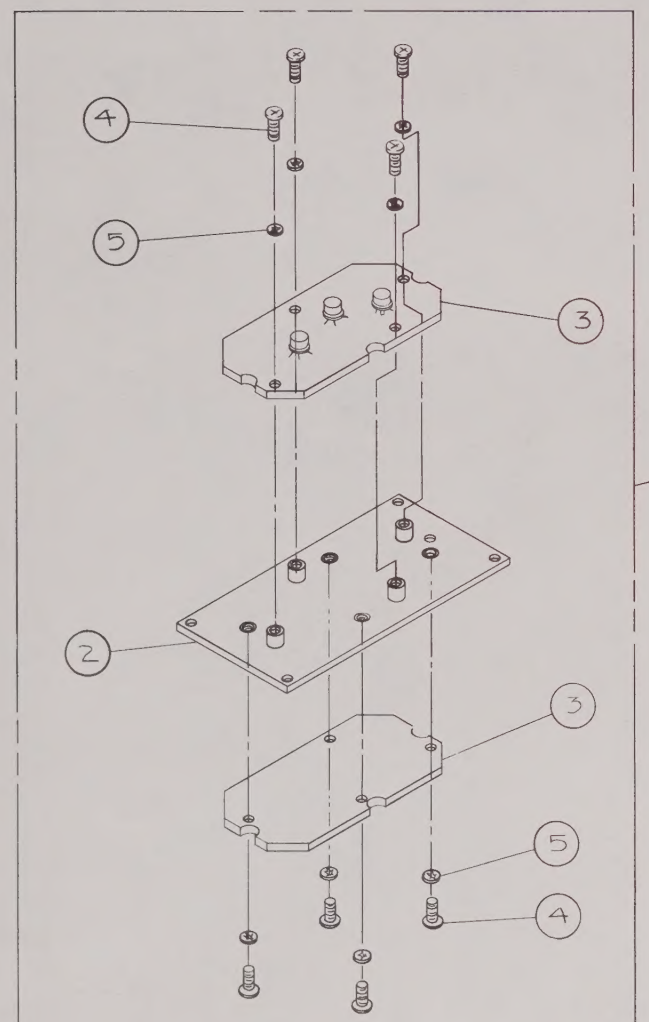

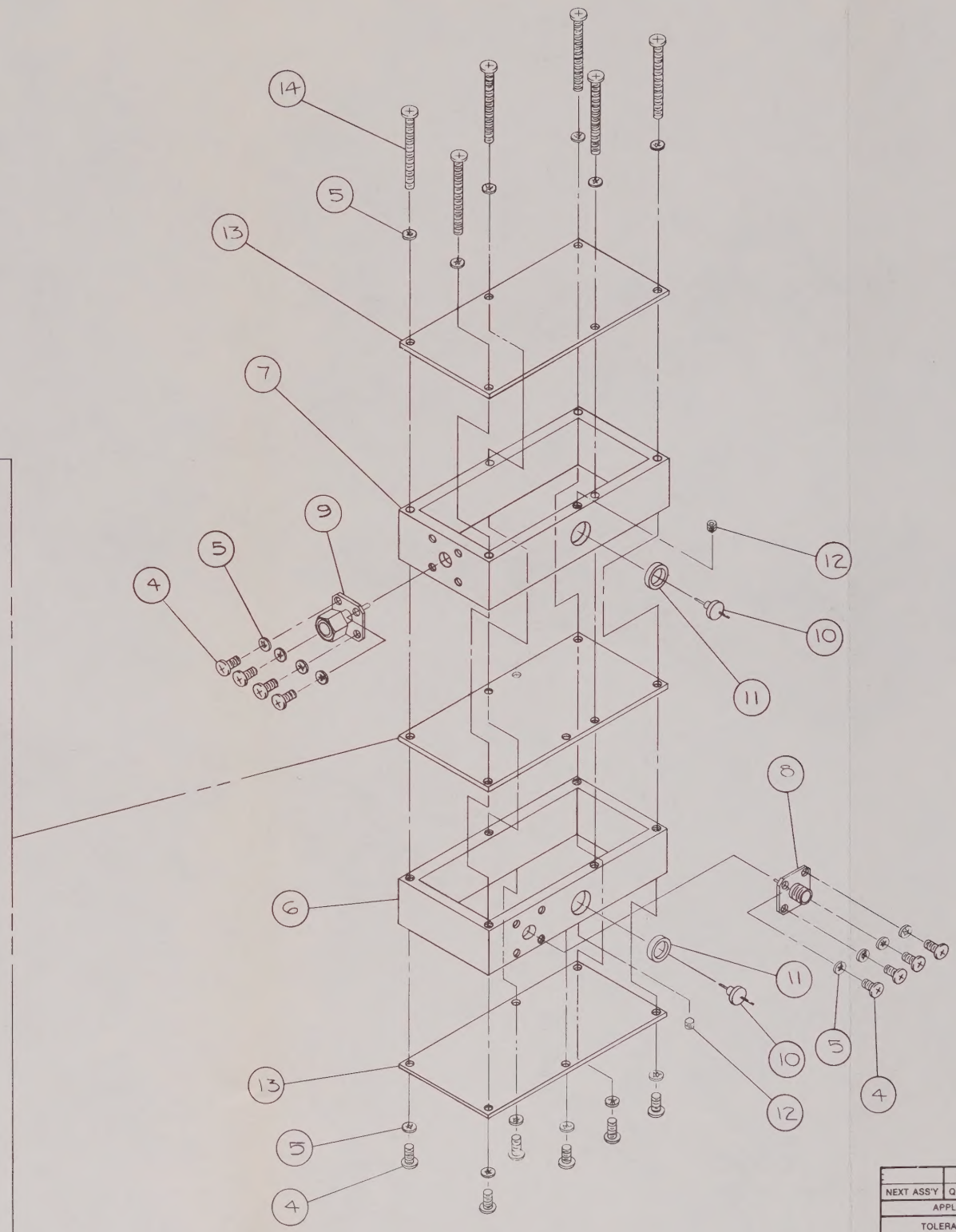

-1 MECHANICAL ASSEMBLY

ITEM	REQ'D	PART NO.	DESCRIPTION
14	6	MS 2-56x3/8	PHIL. SCREW, BND HD
13	2	16-0169	BUFFER/AMP COVER
12	2	MS 2-56x1/8	SET SCREW, SOCKET HD
11	2	2-76-6001-18	CAP BUSHING
10	2	FASC-102W	1000 PF FEEDTHRU CAP
9	1	760112	MODIFIED CONNECTOR
8	1	760111	MODIFIED CONNECTOR
7	1	160166	BUFFER HSG SECT. (1)
6	1	16-0167	BUFFER HSG SECT. (2)
5	28	MS 2	INT TOOTH LOCKWASHER
4	22	MS 2-56x1/4	PHIL. SCREW, BND HD
3	2	160164	PC BD ASS'Y
2	1	160168	CKT BD MTG PLATE
1	1	160161	BUFFER/AMP ASS'Y

LIST OF MATERIALS

NEXT ASS'Y	QTY	MODEL
	1	NAV-750

APPLICATION

TOLERANCES
UNLESS OTHERWISE SPECIFIED
ALL DIMENSIONS APPLY AFTER FINISH
DECIMALS: xx = ± .010 .xxx = ± .005
ANGLES: ± 1/2°
FRACTIONS: ± 1/64
SURFACE ROUGHNESS 125 ✓
REMOVE ALL BURRS

MATERIAL ASSEMBLY
TREATMENT —
FINISH —

DRAWN JNV 10/25/73
CHECKED MHL 11/1/73
APPROVED

INSTRUMENT FLIGHT RESEARCH CORPORATION
WICHITA, KANSAS.

TITLE
DUAL BUFFER/AMP
MECHANICAL ASSEMBLY
NAV-750

SIZE | PART NUMBER 3-16-0161 | REV
SCALE 1 : 1 | WEIGHT — | SHEET 1 OF 1

Fig. 10-15 (Sheet 1 of 2)

DATE	REV	CHANGE	APP'D

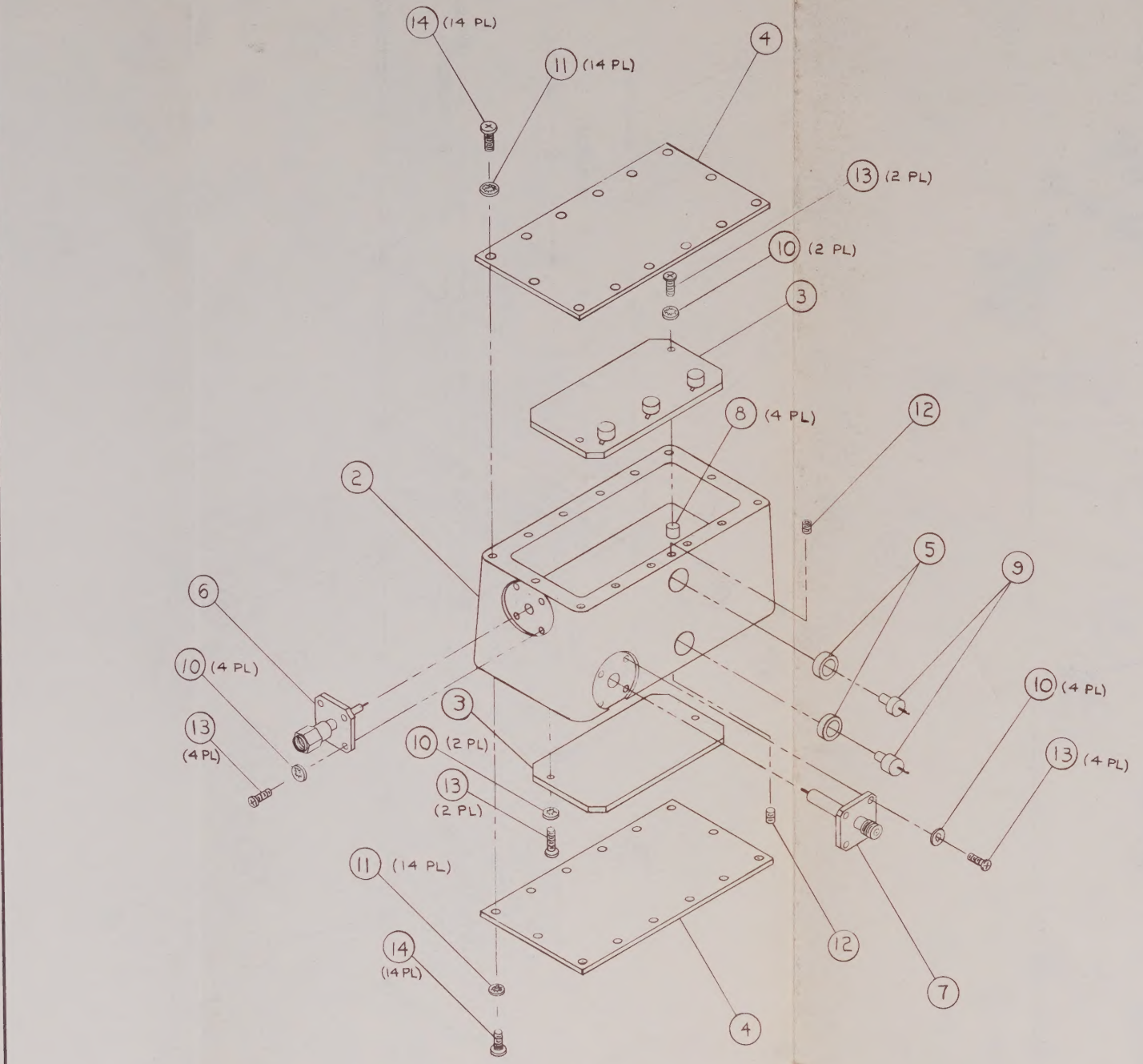

NOTES:
1. THIS ASSY EFF:
   750 S/N: 403 & ON
   750A S/N: 381 & ON

ITEM	REQ'D	PART NO.	DESCRIPTION
14	28	#4-40X1/4	PBHMS
13	12	#2-56X1/4	PBHMS
12	2	#2-56X1/8	SET SCREW, SOCKET DRIVE
11	28	#4	INT TOOTH LOCKWASHER
10	12	#2	INT TOOTH LOCKWASHER
9	2	FASC-102W	1000 PF FEED-THRU FILTER
8	4	350-2188-09-07	#2-56 SPACER
7	1	2052-1201	CONNECTOR
6	1	2051-1201	CONNECTOR
5	2	2-76-0001-18	CAP BUSHING
4	2	1-16-0248	BUFFER AMP COVER
3	2	1-16-0310	P.C. BD. ASS'Y
2	1	2-16-0247	BUFFER AMP HOUSING
1	-	3-16-0311	DUAL BUFFER AMP ASS'Y DWG

LIST OF MATERIALS

NEXT ASSY	QTY	MODEL
1-16-0312	1	NAV 750

APPLICATION

TOLERANCES
UNLESS OTHERWISE SPECIFIED
ALL DIMENSIONS APPLY AFTER FINISH
DECIMALS: .xx = ± .010 .xxx = ± .005
ANGLES: ± 1/2°
FRACTIONS: ± 1/64
SURFACE ROUGHNESS 125
REMOVE ALL BURRS

MATERIAL: ASS'Y
FINISH:

DRAWN RKK 10/13/76
CHECKED WJG 10/14/76
APPROVED MM 10/15/76

- IFR INC -
WICHITA, KANSAS

TITLE: DUAL BUFFER/ AMP MECHANICAL ASSEMBLY NAV 750

SIZE C | PART NUMBER 3-16-0311 | REV
SCALE 1:1 | WEIGHT | SHEET 1 OF 1

 Fig. 10-15 (Sheet 2 of 2)

MP MASTER
MA30517